DATE LABEL.

Department of Industries.

LIBRARY.

N.B.—Under the rules of the Library this book is to be returned WITHI 15 DAYS ~~2 MONTHS~~ from the date of Issue.

Date of issue.	Date of issue.	Date of issue.	Date of issue.
8.8.52			

WBGP-51/2-10280E-1M

MODERN GAS PRODUCERS

679

BY

N. E. RAMBUSH

M.I.Chem.E.

ECTOR OF INDUSTRIES.
LIBRARY.
JAN 1924

LONDON
BENN BROTHERS, LIMITED
8 BOUVERIE STREET, E.C.4
1923

MADE AND PRINTED IN GREAT BRITAIN
BY R. & R. CLARK, LIMITED, EDINBURGH.

MINISTRY OF INDUSTRIES
LIBRARY
JAN 1924

PREFACE

It has been my endeavour to make that portion of the following book which refers purely to points particular to producer gas manufacture and plant design as detailed as possible. This has meant that such parts as refer to points common to other systems of fuel utilization have only been dealt with in a general way.

My object has not been to state the commercial development of each type of plant, but rather to set out the specific features of each design which has been built and worked for producer gas production. Accordingly, I have in many cases explained certain special designs, in as much detail as I have employed in describing those designs which are far more commonly employed in practice.

Being intimately connected with the production of producer gas, I may perhaps have mentioned in more detail those plants with which I have been personally concerned in the past; but, frankly, I have endeavoured to describe other plants and types as impartially as possible, and wish to take this opportunity of thanking the various firms both in this country and abroad who have so freely supplied me with information about their plant.

I wish also to express my thanks to Mr. C. S. D. Harper for his kind help and criticism regarding the text, and to Mr. A. T. Grisenthwaite, B.Sc., for assistance given in connection with the large number of calculations involved in the preparation of the tables and diagrams.

N. E. RAMBUSH.

West Villas, Stockton-on-Tees,
May 1923.

CONTENTS

CHAP. PAGE

I. General Remarks 1

Comparisons with other Methods of Fuel Utilization—Historical Outline of Development of Producer Gas Process—Fuel suitable for Producer Gas Production.

PART I.—THEORY

II. The Principles underlying the Formation of Producer Gas 7

The Effect of Oxygen or Air upon Hot Carbon—The Effect of Endothermal Agents upon Hot Carbon—The Formation of other Components of Producer Gas—Examples of Actual Gasification Results.

III. Important Factors in Gas Producer Practice—

(*A*) *Rate of Gasification.*—The Effect of Fuel Grading—The Effect of Fuel Nature—The Effect of Moisture Content of Fuel—The Effect of Ash—The Effect of Producer Design—The Effect of Load Factor 37

(*B*) *Thermal Gasification Losses.*—The Effect of Moisture Content of Fuel—The Effect of Tar Content of Fuel—The Effect of Grading of Fuel—The Effect of Soot Formation—The Effect of Ash Content of Fuel—The Effect of Radiation and Convection—The Effect of Leakage—The Effect of Washing—The Effect of Nitrogen and Sulphur Content—The Effect of Gas Outlet Temperature—Gasification Efficiencies of Various Plants—Effect of Steam Consumption upon Gasification Efficiency 47

(*C*) *Gas Quality and Quantity.*—Heating Value of Gases—Effect of Moisture Content—Effect of Sensible Heat in Gas Leaving Producer—Effect of Radiation Losses—Effect of Fusing Temperature of Ash—Effect of Fuel Depth and Load Factor—Effect of Volatile Matter and Fixed Carbon in Fuel—Gas Volume Alterations during Gasification 70

(*D*) *Recovery of By-products.*—Ammonia Evolution by Heating only—Ammonia Evolution by Gasification of Coke—Ammonia Evolution in Gas Producers—Tar and Tar Oils obtained by Distillation of various Fuels—Tar and Tar Oils obtained by Gasification—Evolution of Sulphur from Coal during Gasification 78

(*E*) *The Composition of the Ash.*—Melting Point—Effect of Iron—Effect of Alkalis—Effect of Lime—Ash Analysis—Slag Analysis—Slag Viscosity . 117

PART II.—PLANT

CHAP. PAGE

IV. GAS PRODUCER TYPES 131

(A) *Liquid Slag Producers.*—Producers by: Ebelmen; Thwaites; Sepulchre-Fichet-Heurtey; Wuerth; Georgs-Marienhuette; Rehmann; Pintsch . 133

(B) *Hand Ashed Producers.*—Producers with: Flat Grates; Inclined Step Grates; Diametrical Grates; Circumferential Grates; Central Grates; Duplex Grates; No Grates 149

(C) *Mechanically Ashed Producers.*—Early Mechanical Grates—Kerpely Grate—Cone Grates—Star Grates—Fan Grates—Special Grates—Mechanical Grates for High Pressure Producers—Driving Gear 168

(D) *Producer Casings and Brick Linings.*—Designs of Brick Casings—Designs of Brick Crowns—Firebrick Properties—Steel Casing Designs—Reinforced Concrete Producers 192

(E) *Producers with Hand Feed.*—Fuel Feeding Hoppers—Fuel Storage Bells—Fuel Distribution—Bulk Volume of various Fuels—Poking and Poking Holes—Prevention of Gas Loss when Poking 202

(F) *Producers with Mechanical Feed.*—Central Fuel Feeds and Distributors—Fuel Feeding Drums 216

(G) *Producers with Mechanical Stirring.*—Talbot Plain Single Revolving Poker—Chapman Single Revolving Agitator—Duff Oscillating Revolving Pokers—Bentley Multiple Fuel Agitators—Smith Reciprocating Pokers—Hughes Oscillating Poker and Mechanical Producer—Morgan Fuel Leveller and Mechanical Producer—Wood Revolving Pokers and Mechanical Producer 223

(H) *Steam Raising or Water Heating Producers.*—Water Jacketed Producers—Combined Gas Producer and Boiler—Gas Producers with Vaporizers—Heating Surface of Vaporizers—Air Saturators—Air Saturation Temperatures—Using other Endothermal Agents than Steam . . 246

(I) *By-product Recovery Producers.*—Mond's Ammonia Recovery Process—Mond's Ammonia Recovery Producer—Duff's Ammonia Recovery Producer—Lymn's Ammonia Recovery Producer—Moore's Ammonia Recovery Process—Power Gas Low Temperature By-product Recovery Process—Stationary Internal Pre-distillation Retorts—Mechanical Internal Pre-distillation Retorts—External Pre-distillation Retorts—Future Field of Low Temperature By-product Recovery Producers 279

(J) *Special Gas Producers.*—Producers Burning "Green Gases"—Down Draft Producers—Double Zone Producers—Vegetable and Wood Refuse Producers—Peat or Lignite Producers—Dusty Fuel Producers—Large Gas Producers—Small Gas Producers—Traction Gas Producers—Marine Gas Producers 313

(K) *Arrangement of Gas Producers.*—Coal Handling and Storage—Ash Handling and Storage—Housing of Gas Producers 352

CHAP. PAGE

V. Gas Cleaning and Cooling Plant Types 367

Hot Gas Mains—Brick Flues—Gas Valves, Explosion Doors, Dampers—Dust Separators—Cleaning of Hot Gas Mains—Theory of Gas Cooling—Coke and Timber packed Gas Coolers for Clean and Non-volatile Fuels—Wood Wool and Sawdust Scrubbers—Coolers for Tarry Gas—Cascade Washers—Centrifugal Gas Cleaners—High Pressure Tar Filters—Recovery of Ammonia—Sulphate of Ammonia Liquor and Salt—Ammonia Liquor—Tar Dehydration—Recovery of Tar—Possibility of Sulphur Recovery.

VI. Gas Flow Plant and Apparatus 426

Pressure Conditions—Quantity and Density of Gas—Machinery used for causing Gas Flow—Pressure and Volume Regulation—Gas Piping and Distribution

PART III.—WORKING PRODUCER GAS PLANTS

VII. Control Testing and Analysis 459

Fuel Examination and Analysis—Gas Analysis and Tests—Special Tests on By-product Plant—Gas Metering.

VIII. Operating Principles and Working Costs 473

Starting-up of Plant—Running of Plant—Shutting Down of Plant—Working Costs of Plant.

PART IV.—OUTLINE OF PRODUCER GAS UTILIZATION

IX. Typical Applications 487

Gas Engine—Gas Fired Boiler—Humphrey Pump—Gas Turbine—Various Furnaces.

X. Comparison of Utilization Efficiency of various Gases 505

Composition of Gas—Composition of Products of Combustion—Temperature of Combustion—Temperature of Exit Gases—Thermal Utilization Efficiency.

Conversion Tables 525

Index 529

DIRECTOR OF INDUSTRIES, LIBRARY 2 JAN. 1924 BENGAL.

LIST OF TABLES

NO.		PAGE
1.	Reactions of Air and Steam with Carbon	7
2.	Reversible Reactions of Carbon and its Oxides	10
3.	Rate of Formation of Carbon Monoxide from Coke and Carbon Dioxide	11
4.	Effect of Nature of Carbon upon Rate of Formation of Carbon Monoxide	12
5.	Harries' Experiments with Dissociation of Steam in Presence of Hot Charcoal	16
6.	Effect of Time and Temperature upon Dissociation of Steam in Presence of Hot Carbon	17
7.	Reactions involving Methane Formation	23
8.	Distillation Gases from Fuels of Varying Nature	26
9.	Wendt's Gas Producer Tests with Dry Air Blast	28
10.	Wendt's Gas Producer Tests with Moist Air Blast	28
11.	Neumann's Gas Producer Tests using Dry or Moist Air Blast	29
12.	Stage Gas Analysis for various Fuels	31
13.	Neumann's Tests with Varying Steam Quantities	33
14.	Bone & Wheeler's Tests on Mond Gas Producer	34
15.	Effect of Fuel Depth on Steam Decomposition	35
16.	Effect of Fuel Grading upon Fuel Depth	39
17.	Effect of Fuel Grading upon Gasification Rate	40
18.	Effect of Fuel Nature upon Gasification Rate	41
19.	Heat Loss due to Moisture in Fuel	49
20.	Heat Loss due to Tar in Fuel	51
21.	Heat Loss due to Dust and Soot	54
22.	Heat Loss due to Carbon in Ash	55
23.	Heat Loss due to Radiation and Convection	58
24.	Specific Heat of various Gases	62
25.	Thermal Efficiencies of various Producer Gas Plants	68
26.	Heating Value of various Gases	72
27.	Effect of Moisture Content upon Gas Heating Value	73
28.	Effect of Gas Outlet Temperature upon Gas Heating Value	74
29.	Effect of Fixed Carbon and Volatile Matter in Fuel upon Gas Heating Value	77
30.	Volume Alterations of various Reactions of Carbon with Air and Steam	78
31.	Distribution of Nitrogen in Crude Fuel in Distillation Products	80
32a. 32b.	Effect of Fuel Nature upon Nitrogen Distribution	81
33.	Effect of Temperature upon Ammonia Yield by Distillation	82
34.	Effect of Temperature upon Ammonia Yield by Distillation	82
35.	Ammonia Equilibrium	84
36	Rate of Decomposition of Ammonia	86
37.	Ammonia Yield by Coke Steaming	87
38.	Effect of Coke Quality upon Ammonia Yield	88
39.	Effect of various Gases upon Ammonia Yield from Coke	89
40.	Ammonia Production in Gas Producers	92
41.	Distillation of Cellulose	96
42.	Analysis of Cellulose Tars	97
43.	Distillation of Woods	97
44.	Distillation of Peat Tars	98

NO.		PAGE
45.	Carbohydrates obtained by Peat Distillation	98
46.	Tar obtained by Distillation of Lignites	100
47. 48.	Lignite Distillation Tar and its Composition	102, 103
49.	Yield and Composition of Tar from Brown Coals	104
50.	Tar Yields of English Coals	105
51.	Tar Yields of German Coals	106
52.	Tar Yields of various Bituminous Coals	107
53.	Properties of Tar distilled from various Coal Components	108
54.	Properties of Tar from various Bituminous Coals	110
55.	Producer Gas Tars. Fractional Distillation and Tar Yields	112
56.	Composition and Yields of Tar in German Gas Producers	114
57.	Elimination of Sulphur from Coal during Distillation	116
58.	Ash Analysis of Lancashire Coals	121
59.	Analysis of various Blast Furnace Slags	121
60.	Ash Analysis and Melting Point of various English Coals	124
61.	Ash Analysis and Melting Point of various American Coals	125
62.	Dimensions and Capacities of Georgs-Marienhuette Gas Producers	140
63.	Working Results of two Liquid Slag Gas Producers	142
64.	Analyses, etc., of British Fire-clays	196
65.	Heat Conductivity of Fire Bricks	198
66.	Weights of various Fuels in Bulk	211
67.	Volume of Gases saturated with Water Vapour	270
68.	Total Heat of Gases saturated with Water Vapour	380
69.	Specific Gravity of Ammonium Sulphate Solutions	410
70.	Solubility of Ammonia and Carbon Dioxide	413
71.	Densities of various Producer Gases and their Corresponding Air Volumes	428
72.	Capacity of Low Pressure Producer Gas Mains	453
73.	Equivalent Pipe Lengths of Specials	454
74.	Capacity of High Pressure Producer Gas Mains	456
75.	Results of Distilling various Fuels	462
76.	Flow of Producer Gas through Orifices	472
77.	Properties of Combustible Components of Producer Gas	506
78.	Mean Specific Heat of various Products of Combustion	508
79.	Composition of Typical Industrial Gases	513
80.	Theoretical Combustion Conditions of Industrial Gases	514
81.	Factors affecting Excess Oxygen Content for Practical Conditions of Combustion	515
82.	Comparative Practical Conditions of Combustion	517
83.	Sundry Measurement Conversion Factors	526

DIRECTOR OF INDUSTRIES.
LIBRARY
JAN. 1924

LIST OF DRAWINGS, DIAGRAMS, ETC.

FIG.		PAGE
1.	Procedure of Producer Gas Formation	9
2.	Rate of Formation of CO from CO_2 and Coke	11
3.	Effect of Nature of Carbon upon CO Formation	12
4.	Effect of Time Factor upon CO Formation	13
5.	Amount of Steam decomposed at various Temperatures and Time Factors	18
6.	Amount of various Water Gas Constituents at various Temperatures and Time Factors	20
7.	Variation in Composition of Water Gas at various Temperatures	21
8.	Relative Quantities decomposed of CO_2 or H_2O over Hot Coke	22
9.	K. Wendt's Producer	27
10.	Temperature Variation in Mond's Gas Producer	30
11.	Relation between Gasification Capacity and Diameter of Large Gas Producers	45
12.	Relation between Gasification Capacity and Diameter of Small Gas Producers	46
13.	Effect of Moisture Content upon Thermal Gasification Loss	50
14.	Effect of Tar Content upon Thermal Gasification Loss	52
15.	Effect of Ash Content upon Thermal Gasification Loss	56
16.	Gas Producer Casings showing Skin Temperature	58
17.	Sensible Heat contained in various Gases at various Temperatures	63
18.	Sensible Heat contained in Moist Hot Producer Gas	64
19.	Ratio between Sensible Heat and Potential Heat in Hot Moist Producer Gas	67
20.	Rate of Evolution of Ammonia from Coke	90
21.	Ammonia Production in Mond's Producer	91
22.	Nitrogen Recovery Efficiency and Ammonia Yield	94
23.	Results of Carbonizations of Lignite by various Methods	101
24.	Tar Yield in Relation to Distillation Temperature	108
25.	Melting Range of two Coal Ashes	118
26	Slag Viscosity Diagram for various Lime, Alumina, and Silica Mixtures	122
27.	Gasification Stages in a Gas Producer	132
28.	Ebelmen's Liquid Slag Producer	133
29.	Thwaite's Liquid Slag Producer	134
30.	S.F.H. Liquid Slag Producer	135
31.	Wuerth's Liquid Slag Producer	139
32.	Georgs-Marienhuette Liquid Slag Producer	141
33.	Rehmann's Liquid Slag Producer	141
34.	1000 H.P. Pintsch Liquid Slag Producer	144
35.	Pintsch Liquid Slag Producers with Removable Base	145
36.	Pintsch Liquid Slag Producers with Removable Base	146
37.	Bischof's Flat Grate Producer	150
38.	Hermansen's Flat Grate Producer	150
39.	National Gas Engine Co.'s Suction Producer, Sectional Elevation	150
40.	National Gas Engine Co.'s Suction Producer	151

FIG.		PAGE
41.	Smith Gas Engineering Co.'s Shaking Grate	152
42.	Plan of Flat Grate Section	152
43.	Ashing Door	152
44.	Siemens Producer with Step Grate	153
45.	Siemens Producer with Step Grate and Distillation Retort	154
46.	Hermansen's Producer with Step Grate	154
47.	Stein & Atkinson's Producer with Step Grate	155
48.	Duff's Producer	156
49.	Duff's Producer	156
50.	Hagan Producer	157
51.	Hagan Producer	158
52.	Mond Producer Grate	159
53.	Crossley Open Hearth Producer	159
54.	Grate for Open Hearth Producer	159
55.	Wilson Gas Producer with Central Grate	160
56.	B. Dawson's Gas Producer with Central Grate	161
57.	International Gas Producer with Central Grate	161
58.	Power Gas Corporation's Central Grate Gas Producer	162
59.	Huth & Roettger Gas Producer	164
60.	Camden Iron Works Gas Producer	165
61.	Mond-Trump Gas Producer	166
62.	Heller Gas Producer	167
63.	Wilson's Ash Screw Conveyor	168
64.	Taylor's Mechanical Ash Table	169
65.	Kitson's Inclined Mechanical Ash Table and Grate Hood	170
66.	Kerpely's Mechanical Grate Gas Producer Elevation	171
67.	Kerpely's Mechanical Grate Gas Producer, Detail of Grate	172
68.	Photograph of Battery of Kerpely Producers	173
69.	Sectional Elevation of Stein & Atkinson's Mechanical Grate Producer	174
70.	Lymn-Rambush Producer	175
71.	Lymn-Rambush Grate	176
72.	Ehrhardt & Sehmer Producer	177
73.	Detail of Double Roller Bearing	177
74.	*Photograph of Pintsch Mechanical Grate*	178
75.	Photograph of Thyssen Mechanical Grate	179
76.	Rehmann Mechanical Grate Producer	179
77.	Hilger's Mechanical Star Grate Producer	180
78.	Hilger's Mechanical Star Grate Producer	180
79.	Hilger's Modified Mechanical Grate	181
80.	Goetz Star-shaped Grate	182
81.	Barth's Swinging Grate	183
82.	Goetz Flat Grate Mechanical Producer	184
83.	Huth & Roettger Fuel Bed Lifter	184
84.	Deutz Fan-shaped Grate	185
85.	Bamag Fan-shaped Grate	185
86.	Bamag Fan-shaped Grate for Dry-bottom Producer	186
87.	Flinn-Dreffein Mechanical Grate Producer	187
88.	Flinn-Dreffein Mechanical Grate Producer	188
89.	Brown Coal Producer with Reciprocating Ash Discharge	189
90.	Bamag Wet-bottom High-pressure Mechanical Grate Gas Producer	190
91.	Bamag Dry-bottom High-pressure Mechanical Grate Gas Producer	191
92.	Direct Ratchet Drive for Ash Bowl	192
93.	Details of Bricking Systems for Producer Casing	193
94.	Details of Poking Hole Blocks on Producer Casing	194
95.	Details of Crown Bricks for Chapman Producer	194
96.	Melting Point Curve for Silica and Alumina Mixtures	196
97.	Details of Typical Steel Casings for Brick-lined Producers	199
98.	Verity Reinforced Concrete Gas Producer	200
99.	Power Gas Reinforced Concrete Gas Producer	201
100.	Static Fuel-charging Hopper	204
101.	Detail of Top Slide for Static Fuel-charging Hopper	205
102.	Fuel Hopper for Hot Gas Producer and Shovel Feeding	205
103.	Fuel Hopper for Hilger Producer	206
104.	Fuel Hopper for Bamag Producer	206
105.	Fuel Hopper for Vulcan Producer	207
106.	Fuel Distributor for Kerpely Producer	208
107.	Fuel Distributor for Sharp-Basset Producer	209
108.	Rotary Stoking Valve	209

FIG.		PAGE
109	Rotary Stoking Valve and Fuel-feeding Bell	210
110.	Pierson Suction Gas Producer	210
111.	Kynoch Suction Gas Producer	212
112.	Producer with Central Gas Outlet Pipe	212
113.	Fuel-charging Device for Wood Producer	213
114.	Cambridge Log Wood Producer	214
115.	Wells Wood Refuse Producer	215
116.	Detail of Plug Poking Hole	216
117.	Detail of Ball Poking Hole	216
118.	Pintsch Air-blown Poke Hole	217
119.	Pintsch Air-blown Poke Hole	217
120.	Goetz Steam-blown Poke Hole	218
121.	Wellman Producer with Steam-blown Poke Holes	218
122.	Bildt Mechanical Fuel Feed	219
123.	Bildt Fuel Distributor	219
124.	George Mechanical Fuel Distributor	219
125.	Photograph of Producers with George Type Feed	220
126.	Bentley Mechanical Feed and Fuel Distributor	221
127.	Coal Feed for Morgan Gas Machine	222
128.	Coal Feed Drum for Chapman Gas Producer	222
129.	Coal Feed Drum for Camden Gas Machine	223
130.	Coal Feed for Wellman Producer	224
131.	Sectional Elevation of a Talbot Mechanical Gas Producer	226
132.	Detail of Talbot Poker	227
133.	Talbot Producer installed in Glass-works	228
134.	Sectional Elevation of Chapman Mechanical Producer	230
35.	Detail of Chapman Fuel Agitator	231
36.	Diagram of Wear on Chapman Stirring Fingers	233
137.	A. B. Duff's Mechanically Poked Producer	233
38.	Bentley's Mechanically Stirred Producer	234
39.	Smith Gas Producer with Mechanical Pokers	235
40.	Wellman (Hughes) Mechanical Producer	238
41.	Detail of Poker of Wellman (Hughes) Mechanical Producer	239
42.	Diagram of Poker Path	240
43.	Morgan Gas Machine	241
144.	Removal of Fuel Leveller from Morgan Gas Machine	242
145.	Ash Pan with Grate Body Supports for Morgan Gas Machine	243
146.	R. D. Wood's Mechanically Poked Gas Producer, Sectional Elevation	244
147.	R. D Wood's Mechanically Poked Gas Producer, Plan View	245
148.	Detail of Poker of R. D. Wood's Mechanically Poked Gas Producer	246
149.	Photograph of U.S.C.I.P.F.C. Heavy Duty Gas Producer	247
150.	General Arrangement of Battery of Marischka Producers	250
151.	Recent Design of Marischka Producer	251
152.	Koppers-Kerpely Gas Producer with Waste Heat Recovery	253
153.	Dowson & Mason Self-vaporizing Suction Gas Plant	255
154.	Power Gas Corporation Self-vaporizing Suction Gas Producer	256
155.	German Type of Vaporizer	257
156.	Top Vaporizer of Mechanical Grate Producer (Pintsch)	257
157.	National Gas Engine Co.'s Self-vaporizing Gas Producer	258
158.	Amsler Self-vaporizing Gas Producer	259
159.	Water Flow Regulator for Amsler Producer	259
160.	Sharp - Basset Self - vaporizing Producer	260
161.	Syracuse Self - vaporizing Producer	261
162.	Syracuse Water Supply Regulator	262
163.	Westinghouse Double Zone Producer	262
164.	Crossley Self-vaporizing Suction Gas Plant	263
165.	Crossley Vaporizer for Suction Gas Plant	263
166.	Lynn Type Air Saturator and Gas Cooler	264
167.	Smith Type Exhaust Gas-heated Flash Air Saturator	266
168.	Smith Type Exhaust Gas Boiler	266
169.	Smith Type Air Saturator	267
170.	Curves regarding Saturated Mixtures of Gases and Steam	272
171.	Galusha Steam Raiser	274

FIG. PAGE
172. Tait's Gas Producer using Exhaust Gases 275
173. Bender & Fraembs' Direct Vaporizer Plant (Side Elevation) . 277
174. Bender & Fraembs' Direct Vaporizer Plant (Sectional Elevation) 278
175. Bender & Fraembs' Direct Vaporizer Plant (Plan View) . . 278
176. Young & Beilby's Retort Generator 280
177. L. Mond's First By-product Gas Producer Plant 281
178. L. Mond's Producer and Superheater 283
179. L. Mond's Producer with Tar Destructor 284
180. Duff's By-product Producer with Super-heater 284
181. Crossley's By-product Producer with Super-heater 285
182. Lymn's By-product Producer with Super-heater 286
183. Mond Gas Plant to gasify Bohemian Brown Coal 287
184. Mond Gas Plant to gasify Italian Peat 289
185. Plan and Elevation of 300 B.H.P. Moore By-product Recovery Gas Producer Plant 292
186. Photograph of 300 B.H.P. Moore By-product Recovery Gas Producer Plant 293
187. Photograph of Mond Producer modified to work on Low Temperature By-product Recovery Process 295
188. Block Plans of 100-ton Mond Plant and 100-ton Low Temperature By-product Recovery Plant . 297
189. Thyssen's Mond Gas Producer . 298
190. Producer with Single Fuel Distillation Bell 298
191. Producer with Multiple Fuel Distillation Bells 299
192. Producer with Revolvable Fuel Distillation Bells 300
193. Producer with Linck Mechanical Retort 300
194. Photograph of Linck Mechanical Retort 301
195a. } Mechanically stirred Pre-distilla-
195b. } tion Retort 302

FIG. PAGE
196. Pintsch Producer with Superimposed Pre-distillation Retort 303
197. Photograph of Pintsch Producer with Superimposed Pre-distillation Retort 305
198. A.-G. f. Brennstoff-Vergasung Pre-distillation Retort with Mechanical Discharge 308
199. A. Vergasungsg. Low Temperature Producer for Moist Brown Coal 309
200. Liquid Slag Producer with Arrangement for Recovery of Low Temperature Tar . . . 309
201. Syracuse Producer with Arrangement for burning Green Gases . 314
202. Pintsch Producer with Arrangement for burning Green Gases . 316
203. Akerlund Down-draught Producer 317
204. Dowson Double-zone Bituminous Suction Plant 319
205. 800 B.H.P. Double-zone Bituminous Suction Plant (Dowson type) 319
206. Pintsch Static Double-zone Suction Producer for Brown Coal, Peat, or Wood 320
207. Westinghouse Double-zone Gas Producer 321
208. Ruston Refuse Gas Producer (Sawmill Refuse) 324
209. Ruston Refuse Gas Producer . 325
210. Power-Gas Corporation Waste Wood Producer (Aeroplane Shop Refuse) 326
211. Crossley Brothers, Limited, Waste Wood Producer (Rice Husks) . 327
212. Wells Vegetable Refuse Gas Producer 328
213. Crossley Bros. Spent Tan Gas Producer (700 B.H.P.) . . 328
214. Deutz Peat and Brown Coal Gas Producer 329
215. Crossley Bros. 400 B.H.P. Peat Plant 331
216. Power-Gas Corporation 30-ton Lignite Plant 332
217. Viele, Blackwell, & Buck Rotary Producer for Waste Fuels . . 333
218. Pintsch Producer for Dusty Fuels (Diagram) 334
219. Pintsch Producer for Dusty Fuels (Photograph) 335
220. 600 B.H.P. Suction Gas Producer Plant for Dusty Fuels . . 336

FIG.		PAGE
21.	Bourcoud's Powdered Fuel Producer	336
22.	Pintsch Annular Gas Producer	338
23.	Deutz Small Gas Producer	338
24.	Pintsch Portable Disinfection Gas Producer	339
25.	National Portable Producer Gas Plant and Engine	340
26.	General Arrangement of D. J. Smith's Gas Producer Plant for Vehicles	342
27.	Sectional Elevation of D. J. Smith's Gas Producer	343
28.	Gas Scrubber for Smith Traction Gas Plant	344
29.	3-ton Motor Lorry with Parker Gas Producer	345
30.	Parker Gas Producer	346
31.	Dust Separator and Gas Cooler for Parker Gas Producer	346
32.	Gas Scrubber for Parker Traction Gas Plant	347
33.	Capitaine's Gas Engine Launch	349
34.	Drakenburgh Marine Gas Producer	350
35.	Arrangement of Galusha Producer in a Boat	351
36.	500-ton Gas Motor Ship (Galusha Producer)	352
37.	Suction Gas Plant and Engine (National)	353
38.	Semi-gas-fired Crucible Furnaces (Hermansen)	354
39.	Hand-stoked Gas Producer (Amsler)	355
40.	Charging Platform for Sawmill Refuse (Ruston)	356
41.	Rotary Charging Hopper for Multiple Feed (Pintsch)	356
42a. 42b.	Travelling Coal-charging Truck (Latta)	357
43.	Producer with Overhead Circular Storage Bunker (Power-Gas Corporation)	358
44.	Producer House with Parabolic Coal Storage Bunker (Hagan)	359
45.	Coal and Ash Handling Plant for Static Producers (Hagan)	360
46.	Coal Handling and Storage Plant for High Duty Producers (Dixon)	361
47.	Battery of Mechanical Grate Producers (Poetter)	362
248.	Battery of Mechanical Grate Producers (Thyssen)	363
249.	Battery of Mechanical Grate Producers (Ehrhardt and Sehmer)	364
250.	Arrangement of Morgan Producer Gas Machine for 12-100 ton Siemens Furnaces	365
251.	Underground Gas Flue	368
252.	Sand-sealed Disc Valve	369
253.	Mushroom Valve	370
254.	Mushroom Valve	370
255.	Explosion Door	371
256.	Sand Damper (Horizontal)	371
257.	Asbestos Damper (Vertical)	372
258.	Quadrant Plate Valve	373
259.	Rectangular Dust Separator for Coke	374
260.	Circular Dust Separator	375
261.	Cyclonic Dust Separator	375
262.	Baffle Type Dust Separator	376
263.	Total Heat Content in Saturated Gas and Steam Mixtures	381
264.	Emerson Dowson's Clean Producer Gas Plant	382
265.	National Suction Gas Plant	383
266.	Crossley Suction Gas Plant	384
267.	Sharp-Basset Combined Scrubber and Dryer	385
268.	Water-spraying Nozzle	385
269.	Dowson & Mason Open Hearth Suction Gas Plant	386
270.	Power-Gas Corporation Suction Pressure Gas Cleaning Plant	387
271.	Ruston Wood Wool Scrubber Filter and Dryer	387
272.	Amsler Sawdust Scrubber Filter and Dryer	388
273.	Galusha Scrubber and Dryer mounted on Producer	389
274.	Plan View of Galusha Scrubber and Dryer	389
275.	Akerlund Spray Gas Washer	390
276.	Dowson & Mason Cascade Washer for Wood Waste Plant	391
277.	Wells's Cascade Washer for Wood Waste Plant	392
278.	Ruston Gas Cleaning Plant for Gas from Wood Waste	393
279.	Lymn Gas Washer	394
280.	Gas Cleaning Plant for Bituminous Fuels (Power-Gas Corporation)	395
281.	Sawdust Scrubber for Bituminous Fuels (Power-Gas Corporation)	396

FIG. PAGE
282. National Dry Scrubber Filler for Gas from Wood Waste . . 396
283. Deutz Gas Washing Fan or Disintegrator 397
284. Pelouze & Audoin Tar Extractor Screen (Pintsch) 399
285. Smith Type of Gas Cleaning Plant for Bituminous Producer Gas . 400
286. Smith Tar Extractor . . . 401
287. Photograph of Dismantled Tar Extractor 401
288. Flinn & Dreffein Gas Cleaning Plant for Bituminous Producer Gas 402
289. Flinn & Dreffein Tar Extractor . 403
290. Diagram of Power-Gas Corporation By-product Recovery Plant . 406
291. Diagram of Air and Gas Pressures and Temperatures on a Lymn Plant 407
292. Sulphate of Ammonia Evaporator 408
293. Sulphate Evaporation Curves . 410
294. Chrystal's Neutral Sulphate Absorption Method . . . 411
295. Thyssen's By-product Recovery Producer Gas Plant . . . 412
296. Tar Centrifuge 416
297. Tar Recovery Plant for Bituminous Coal (Type A B V.) . . . 417
298. Tar Recovery Plant for Brown Coal (Type A.B.V.) 418
299. Tar Recovery and Gas Cooling Plant for Raw Brown Coal (Type A.V.G.) 419
300. Theisen's Disintegrator . . 419
301. Hager & Weidmann's Tar "Wolf" 421
302. Rotary Tar Filter . . . 422
303. Rotary Tar Filter . . . 422
304. Meldrum Steam Jet Blower . 431
305. Ledward - Beckett Steam Jet Blower 431
306. Eynon-Evans Steam Jet Blower . 432
307. Wellman Steam Jet Blower . . 432
308. Test Curve of Eynon-Evans Jet Blower 433
309. Test Curve of Chapman Jet Blower 434
310. Diagrams of Fan Impellers . . 436
311. Belt-driven Centrifugal Air Blower 436
312. Section through Air Blower . 436
313. Motor-driven Air Fan . . . 437
314. Centrifugal Gas Blower . . 438
315. Pressure-volume Characteristic for a Gas Washing Fan . . . 439

FIG. PAGE
316. Pressure-volume Characteristic for a Gas Boosting Fan . . . 440
317. Section through Roots Blower . 442
318. Section through modified Roots Blower 442
319. Belt-driven Roots Blower (Thwaites Bros.) 442
320. Roots Blower with direct Steam Engine Drive (Samuelson) . 443
321. Drum Type Rotary Gas Blower . 443
322. Pressure-volume Curves typical of a Roots Blower . . . 444
323. Test Curves of a Roots Blower . 444
324. Pressure Governor for Centrifugal Fans 447
325. By-pass Governor for Positive Blower 449
326. Gas Flow Curves for Pipes 1" to 6" diameter 452
327. Gas Flow Curves for Pipes 8" to 15" diameter 452
328. Gas Flow Curves for Pipes 15" to 36" diameter 452
329. Distillation Test Apparatus . . 461
330. Gas Sampling Tube . . . 463
331. Portable Producer Gas Analysing Set 465
332. Diagram of Gas Testing Apparatus 468
333. Humphrey Pump. . . . 491
334. Holzwarth Gas Turbine . . 493
335. Producer Gas-fired Copper Refining Furnace (Power-Gas Corporation) 494
336. Producer Gas-fired Lead Melting Pot (John Wright & Co.) . . 495
337. Producer Gas-fired Glass Tank Furnace (Stein & Atkinson) . 496
338. Producer Gas-fired Glass Pots (Hermansen) 497
339. Producer Gas-fired Enamelling Muffle (Hermansen) . . . 497
340. Producer Gas-fired Lime Kiln (Hermansen) 498
341. Producer Gas-fired Tunnel Type of Continuous Brick Kiln (International Co.) 499
342. Producer Gas-fired Recuperative Forging Furnace (Stein & Atkinson) 500
343. High-speed Tool Furnace (British Furnaces Ltd.) 501
344. Rotary Heat Treatment Furnace (Rockwell Co.) 501

FIG. PAGE
345. Producer Gas-fired Carburizing Stove (Richmond) . . . 502
346. Producer Gas-fired Plate Heating Furnace (Power-Gas Corporation) 502
347. Producer Gas-fired Boiling Pan (Ehrhardt and Sehmer) . . 503
348. Producer Gas-fired Drying Stove for Cycle Frames (Deutz) . . 503
349. Sundry Small Applications of Producer Gas (National) . . 504
350. Thermal Capacity of Gases between 200° C. and 1400° C. . . 510
351. Thermal Capacity of Gases between 1400° C. and 2600° C. . . 511
352. Cooling Curves for Gases at various Initial Temperatures . . 512
353. Furnace Utilization Efficiencies of various Industrial Gases . . 519
354. Effect of Pre-heating of Gas and Air upon Flame Temperatures 522
355. Flue Gas Composition Curves . 523
356. Flue Gas Losses for Varying Composition and Temperatures . 524

INDUSTRIES
1924

MODERN GAS PRODUCERS

CHAPTER I

GENERAL REMARKS

COMPARISON WITH OTHER METHODS OF FUEL UTILIZATION

SOLID fuels are the chief source of the heat and power which are used by the industries of this country. Various processes are in common use to render available the heat contained in a solid fuel, and the producer gas process is one which has rapidly found favour. The best way to define clearly the typical points about the producer gas process is to make a short comparison between the various main processes adopted in industry to utilize the heat of a solid fuel.

There are three main processes :—

I. Direct combustion.
II. Distillation with simultaneous coking.
III. Complete gasification.

I. Burning the fuel directly by admitting *all* the air that is necessary for complete combustion, leaving only ash and clinker behind as a residue, is the simplest and oldest of all processes. It is by this method that the largest quantity of fuel is consumed in applications varying from the domestic fire-grate to mechanically stoked boilers or pulverised-fuel fired furnaces.

II. Distillation of fuel by heating it in closed retorts or chambers without admission of air, results in our separating the fuel into three different phases: gaseous, liquid, and solid; namely, gas, tar and liquor, and coke. Gas made in this way is obtained by liberating the volatile matter in the fuel, and, therefore, is generally of high heating value (from 450 to 600 B.T.U. per cubic foot net). We distinguish between three different types of distillation plants :—

(*a*) The Towns' Gas Works, whose main object is to produce a gas suitable for domestic and other purposes,

(*b*) Coke ovens, which aim at producing a good metallurgical coke

(*c*) Low temperature distillation processes whereby a smokeless fuel suitable for domestic and industrial consumption is produced simultaneously with "low temperature" tars.

In cases (*a*) and (*b*) only 20 to 25 per cent of the total heat content of the solid fuel is obtained in a gaseous state, while in case (*c*) very much less gas is obtained.

III. Complete gasification comprises all the processes which aim at converting the whole of the solid fuel into a gaseous and liquid (tar oil) state, leaving only ashes as a residue. We distinguish between three types of complete gasification processes, depending upon whether the gas is obtained by decomposing the fuel with either (A) *air in the air producer gas generator*, or (B) *steam in the water gas generator*, or (C) *by a mixture of the two in the producer gas generator proper.*

(A) *The Air Producer Gas Generator* is now only used for specific purposes, unless special means are provided to avoid the operation troubles caused by excessive clinker formation. In working this type of generator the aim is to convert all the carbon in the fuel into carbon monoxide gas, CO, by admitting a current of air only in quantity insufficient to obtain complete combustion of the fuel. Air Producer Gas has generally a heating value of 120 B.T.U. per cubic foot net when good-class fuel is in use.

(B) In the *Water Gas Generator* steam and air are supplied intermittently at regular periods, each cycle lasting about 5 to 8 minutes. During the steam period water gas is produced by the hot carbon combining with the steam to form hydrogen and carbon monoxide. Since this reaction absorbs heat, the fuel in the generator gets cooler as the addition of steam continues, while the gas simultaneously produced decreases in heating value. To heat up the fuel bed again the steam supply is stopped and air only is admitted in ample quantity to obtain complete combustion; thus the fuel bed is quickly raised to such a temperature that it is ready again for the production of water gas, the normal heating value of which is about 300 B.T.U. net per cubic foot.

(C) The *Producer Gas Generator Process* proper is a continuous one, making use of a simultaneous manufacture of both air-producer gas and water gas. It gives us the most thermally efficient means for converting solid fuel into gaseous form, in that such a quantity of steam is mixed with the air previous to its introduction into the producer that the heat-absorbing and heat-generating reactions of the steam and air respectively tend to maintain a comparatively low fuel bed temperature. Producer gas may vary in heating value from 110 to 190 B.T.U. net per cubic foot depending upon the fuel in use.

HISTORICAL OUTLINE OF DEVELOPMENT OF PRODUCER GAS PROCESS

If a sufficiently deep fuel bed is provided in a solid fuel grate, be it for a boiler, domestic fireplace, or other purpose, a partial production of producer gas will take place, and in so far as this statement applies, the first time when producer gas was made may date as far back as we care to count.

As far as we know, the first separately constructed gas producer was built by Bischof in Germany, 1839, who was followed by Ebelmen in France, 1840, and Ekman in Sweden, 1845.

The first large industrial development in the use of gas producers was when the two brothers Siemens patented their first combined gas producer and regenerative furnace in 1861; thus opening up the field for the use of raw crude producer gas in heavy furnace work.

During the years 1879–1881 J. E. Dowson in England developed a producer gas cooling and cleaning plant, which extended the scope of application of producer gas further in so far as it became possible to utilize the gas in small furnaces and gas engines.

In 1889 Dr. Ludwig Mond showed how it had been possible during some preceding years to generate producer gas, while simultaneously recovering by-products from the fuel in a chemical works in Cheshire, England, thereby pointing out that not only are we to consider a producer gas fuel from the point of view of its heat content, but also from that of its properties in regard to the recovery of certain products required in the Chemical Industries and Agriculture.

The work of the various pioneers mentioned above has been followed up until the present day by engineers, chemists, and manufacturers throughout the world, developments and improvements being continuously brought about both in regard to the generation and application of producer gas, with the result that this gas is now generally accepted as the cheapest form in which we can obtain and apply gaseous fuel for most industrial heating and power purposes.

The number of firms in England, America, and Germany which design and supply producer gas plants is at present about 150; this statement is sufficient evidence of the extensive requirements of industry for producer gas plants.

FUELS SUITABLE FOR PRODUCER GAS GENERATION

Although coal is the most commonly used solid fuel for producer gas generation both here and abroad, many countries do not possess coal supplies of their own, and either have to import this, or select that fuel utilization process which will treat their home fuel in the most economical way.

Apart from its cheaper operating costs the producer gas process is very much in advance of any of the other gas-making processes in so far as it is possible profitably to use practically any combustible matter in a suitably designed gas producer.

The following list of fuels that have been used for the generation of producer gas in various parts of the world brings this point clearly forward :—

Anthracite smalls.
Refuse coal containing up to 50 per cent ash.
Coke ballast or breeze containing up to 50 per cent ash.
Moist brown coal.
Moist lignites.
Moist peat.
Wood.
Sawdust, and other sawmill and wood refuse.
Sugar-cane refuse.
Almond, cocoa, and other nut shells.
Fruit stones.
Bark.
Spent tan.
Straw.
Tea prunings.
Cotton seeds.
Rice husks.
Olive husks.
Kurdy husks.
Camel dung.

PART I

THEORY

CHAPTER II

THE PRINCIPLES UNDERLYING THE FORMATION OF PRODUCER GAS

PRODUCER gas may be considered as a mixture of completely burnt and combustible gases, the amount of combustion[1] of the solid fuel needed being of such a magnitude as to balance with the various thermal losses adherent to the process.

Whatever degree of combustion of the fuel is needed is obtained by burning the carbon in the fuel with oxygen, generally in the shape of air. Since the quantity of heat set free in this way is of such a magnitude as to cause difficulties in the working of the generator, steam or other gas which absorbs heat on combining with carbon (endothermal agent) is added to the air introduced. Thus, in the formation of producer gas we have to deal with the combined effect upon hot carbon of two different gases, each of which may form various gaseous bodies, depending upon the physical conditions existing in the gas producer.

In the following we shall therefore study—

(1) The effect of oxygen or air upon hot carbon.
(2) The effect of steam or other endothermal agent upon hot carbon.
(3) The formation of other combustible components of producer gas otherwise than by means of air or steam.
(4) Examples of practical gasification results by the joint action of (1) and (2).

TABLE 1

	No.	Reaction.	Molecular Reaction Heat. [2] Cals. (large) per gramme molecule.	Heat of Reaction per unit weight of Solid Carbon.	
				Cals./kg.	B.T.U./lb.
Oxygen	1	$C + O_2 = CO_2$	+ 97·65	+8137	+14650
	2	$C + CO_2 = 2CO$	− 38·8	−3233	− 5820
	3	$2C + O_2 = 2CO$	+ 58·8	+2450	+ 4410
	4	$2CO + O_2 = 2CO_2$	+136·4		
Steam	5	$C + H_2O_{(steam)} = CO + H_2$	− 28·8	−2400	− 4320
	6	$C + 2H_2O_{(steam)} = CO_2 + 2H_2$	− 18·8	−1566	− 2820
	7	$CO + H_2O_{(steam)} = CO_2 + H_2$	+ 10·0		

[1] The solid fuel obviously is completely burnt to ash.

[2] Throughout the book the term "calorie" refers to the large or kilogramme calorie unit unless otherwise definitely stated.

Table 1 gives a list of the possible reactions of air and steam with carbon, the gaseous components formed as well as the heat evolved or absorbed by the various reactions.

The table is based upon the most common figures for molecular heats given by various authorities upon the subject; but in applying the figures in this table to practice it should be borne in mind that the heat of complete combustion of carbon alters considerably with the type of carbon used, *e.g.*—

Observed Heating Value per kg. Carbon.	State of Carbon.	Authority.
Cals. 8080 8137	Wood charcoal.	Favre and Silbermann. Berthelot.
8040	Sugar charcoal.	Favre and Silbermann.
8047	Retort graphite.	Do.
7762 7901	Blast furnace graphite.	Do. Berthelot.
7997	Natural graphite.	Favre and Silbermann.

The molecular reaction heat is the thermochemical standard, which designates in calories the amount of heat evolved or absorbed when as many grammes of the substance as its molecular weight figure indicates take place in the reaction. For instance, $C + O_2 = CO_2 (+ 97{\cdot}65$ cals.) means that 12 grammes of carbon react with 32 grammes of oxygen to give 44 grammes of carbon dioxide, and that thereby 97·65 calories (large) are *set free*; similarly $C + H_2O = CO + H_2$ ($-28{\cdot}8$ cals.) means that 12 grammes of carbon react with 18 grammes of steam to give 28 grammes of carbon monoxide and 2 grammes of hydrogen, and that thereby 28·8 cals. are *absorbed* from the surroundings.

(1) THE EFFECT OF OXYGEN OR AIR UPON HOT CARBON

If air (oxygen)[1] is introduced into a gas producer it is possible that all reactions 1 to 4 in Table 1 may take place.

Fig. 1 shows the various reaction stages diagrammatically.

Air (O_2) is introduced through the grate into the fuel bed and on coming into contact with the carbon is practically instantaneously burnt, as per reaction 1, into CO_2, which on rising up through the fuel bed is gradually converted into CO by contact with the succeeding layers of hot carbon which the gases have to pass through (reaction 2).

[1] Air is a mixture of 79 per cent of nitrogen (N_2) and 21 per cent oxygen (O_2), but it is only the oxygen which takes part in the reactions of air with carbon.

If the gases existing immediately at or near the grate are intensely hot it is possible that reaction 3 (the direct formation of carbon monoxide from oxygen and carbon) may take place. From a practical point of view it is enough that the ultimate goal aimed at, which is the formation of CO, is achieved, but it may here be mentioned that divergent opinions exist as to whether reaction 3 takes place directly or not. In accordance with the author's experience there is no doubt that the CO_2 formation stage is the first and the initially preponderant one, but since the rate of formation of CO_2 is so much larger than that of the formation of CO, it is practically impossible to prove whether in gas producer practice reaction 3 does take place or not.

Reaction 4, the combustion of CO by means of free oxygen to CO_2, should not take place in any well-operated gas producer. On fig. 1 this is indicated as taking place by some air escaping below the CO_2 reaction zone through a fissure in the brickwork up behind the brick-lining and then again through a fissure at the top of the brickwork into the gas zone above the fuel bed. Similarly the existence of a shallow fuel bed of uneven temperature may in certain places cause oxygen from the grate to pass to the upper fuel layers without previously coming into contact with carbon of a sufficiently high temperature.

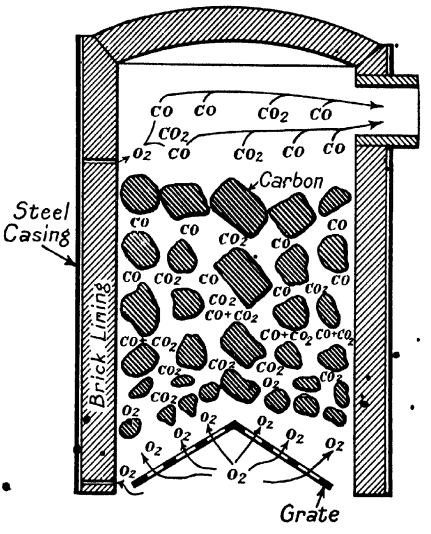

Fig. 1.—Procedure of Producer Gas Formation.

The ultimate goal is, as stated, to make as much as possible of the combustible gas CO with as little as possible CO_2, and although this is nearly possible of achievement in practice, yet CO_2 will always be present in the final gas. The reasons for this are various, but the main cause is that the reaction between C and CO_2 belongs to the class of "reversible" reactions, so that instead of writing

$$C + CO_2 = 2CO,$$

we must write

$$C + CO_2 \rightleftarrows 2CO \mp 38{\cdot}8 \text{ cals.},$$

thereby indicating not only that carbon and CO_2 can form CO, but that CO can split up into C and CO_2. Such a system is in a state of dynamic equilibrium for which (if sufficient time be given for the attainment of the equilibrium stage at a certain temperature) the relative quantities of CO and CO_2 formed can be determined. It is a well-known law of physical chemistry that those reactions which absorb heat are favoured by high temperatures; this also applies in the case of the formation of CO, the rate of which is very much more rapid at higher than at lower temperatures.

The first to investigate the principles underlying this reversible reaction was Boudouard,[1] who was followed by Mayer and Jacoby[2] in Germany, Rhead and Wheeler[3] in England, and the reader is referred to the original work of these various researchers. On the basis of some of these tests Table 2 has been worked out (Dr. K. Neumann). In this table is stated the volume percentages of the various gases which will be in complete equilibrium with solid carbon at various temperatures if sufficient time be given for the attainment of the equilibrium stage.

TABLE 2

$$C + CO_2 \rightleftarrows 2CO$$

Temperature °C.	Gases per cent by Volume.			Equilibrium Constant. $K = \frac{(CO)^2}{CO_2}$
	CO_2	CO	N_2	
400	20·6	·9	78·5	·00039
500	17·1	6·4	76·5	·02396
600	10·1	18·1	71·8	·3241
700	3·1	29·4	67·5	2·789
800	·6	33·7	65·7	18·94

In considering the figures given in this table it should be clearly emphasized that, apart from the effect of the nature of the solid carbon in use, it may take hours and even days for the complete equilibrium to be established. For this reason it is clear that these results cannot be directly applied to gas producer practice, where the gases are only in contact with the fuel for a single or for a few seconds.

An extended research upon the formation of CO from CO_2 and carbon under very short time exposures, such as actually exist in a gas producer, has been carried out by Clement, Adams, and Haskins,[4] on the basis of whose work figs. 2, 3, and 4 and Tables 3 and 4 have been worked out.

Fig. 2 and Table 3 give the result of the effect of passing CO_2 over hot coke at varying temperatures and at various rates, while fig. 3 and Table 4 show the effect of the nature of the carbon used upon the speed of the reaction.

From fig. 2 and Tables 3 and 4 it will be realized that the shorter the time of contact the lower will be the amount of carbon monoxide formed, and that if the time of contact is decreased it will be necessary to increase the temperature if the same final gas composition is to be obtained. It is further clear that the temperatures given in Table 2, corresponding to the achievement of complete equilibrium, have to be considerably exceeded if a final gas composition corresponding to the equilibrium stage is to be obtained.

[1] *Annales de Chimie et de Physique*, 1901, No. 24, p. 5.
[2] *Journal für Gasbeleuchtung*, 1909, p. 282.
[3] *T. Chem. Soc.*, 1910, 2178, and 1911, 1140.
[4] Essential factors in the formation of producer gas. *Bureau of Mines*, 1911, *Bulletin*, No. 7.

TABLE 3

RATE OF FORMATION OF CO FROM CO_2 AND COKE
Clement, Adams, and Haskins (*Bull.* 7)

900.		1000.		1100		1200.		1300° C.	
t Seconds.	Per cent CO.	*t* Seconds.	Per cent CO.	*t* Seconds.	Per cent CO.	*t* Seconds.	Per cent CO.	*t* Seconds	Per cent CO.
142·0	27·8	123·2	86·6	90	97·1	..	..	..	..
80·20	16·9	80·25	79·5	29·92	95·5	..	..	..	..
43·91	9·6	33·25	52·7	13·20	81·7	18·92	98·7	..	..
24·82	5·6	18·72	35·0	6·765	59·2	12·70	98·3	..	..
16·11	3·7	6·37	13·8	3·198	34·6	8·25	95·6	8·86	99·7
9·575	2·3	4·101	9·1	1·784	21·1	2·4	62·4	4·15	99·7
3·741	0·9	3·072	6·9	1·66	19·42	1·6	46·0	2·1	95·5
..	..	1·983	4·5	1·462	17·7	1·1	35·7	1·13	81·6
..	..	..	..	·962	12·1	..	..	..	..
..	..	..	..	..	..	..	..	..	..

The percentages of CO given are those found by the mathematical equation, which in most cases are in close agreement with the figures obtained experimentally.

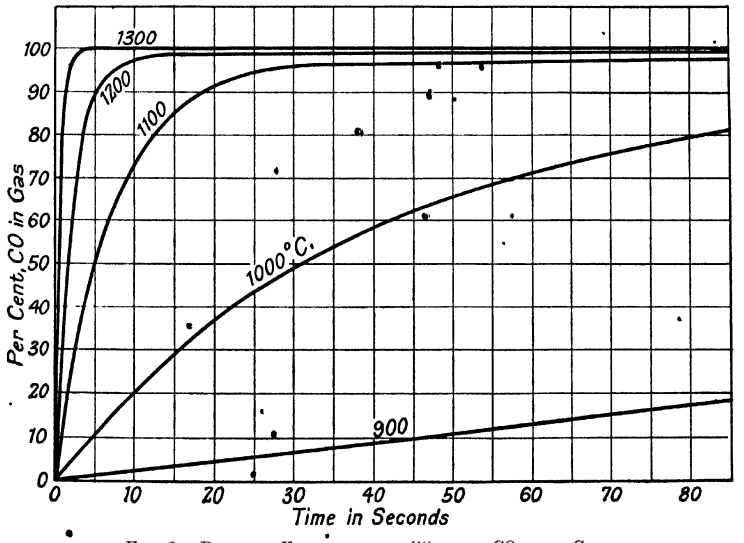

FIG. 2.—RATE OF FORMATION OF CO FROM CO_2 AND COKE.

Fig. 3 indicates that not only is it necessary to consider the time contact factor and the temperature, but that the nature of the fuel itself has an important bearing

upon the rate of formation of carbon monoxide. For instance, whereas at 1100° C. and 5 seconds time contact practically complete conversion of CO_2 to CO is obtained when using charcoal, for coke and anthracite only a 45 to 50 per cent conversion is obtained.

TABLE 4

RATE OF FORMATION OF CO FROM CO_2 AND CHARCOAL OR ANTHRACITE AT 1100° C.

Charcoal.		Anthracite.	
t Seconds.	Per cent CO.	*t* Seconds.	Per cent CO.
36·48	97·2	34·2	91·2
10·43	97·2	9·37	65·7
4·968	97·1	5·415	47·2
3·640	96·8	3·301	32·2
1·921	95·5	2·439	25·1

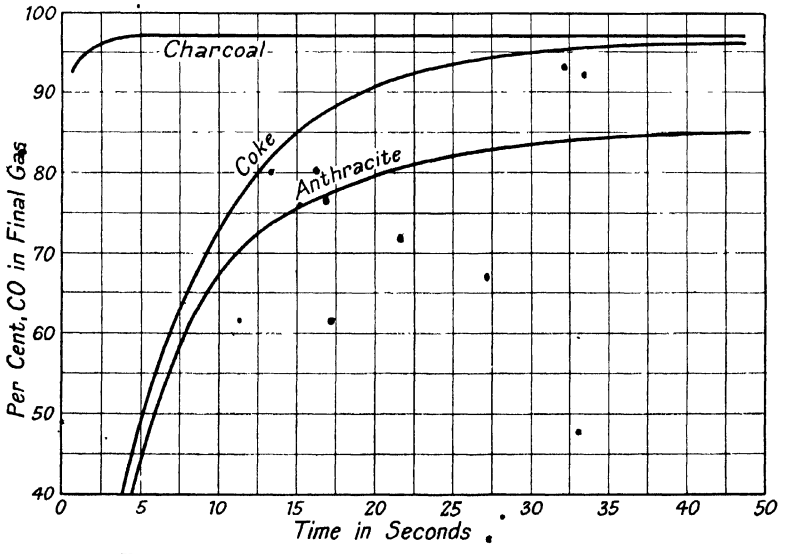

FIG. 3.—EFFECT OF NATURE OF CARBON UPON CO FORMATION.

The curves in fig. 4 represent a summary of the results which these investigators obtained by passing a mixture of CO_2 (21 per cent) and nitrogen (79 per cent) over hot coke. The percentage of CO formed is plotted as ordinate against the temperature employed as abscissa, while each of the various curves represents the interrelation of these two variables for a definite length of time of contact between the

gases and the coke. The various curves represent the results of time factors varying from infinite (completed equilibrium) to 0·1 second.

It is of course extremely difficult to estimate with a definite degree of accuracy the actual time that the producer gas is in contact with the hot fuel, since the amount of voids in the fuel bed alters with the grading and the porosity of the coke formed from the coal; further, such factors as openness in the fuel bed due to the effects of caking and clinkering cannot be determined with any degree of accuracy.

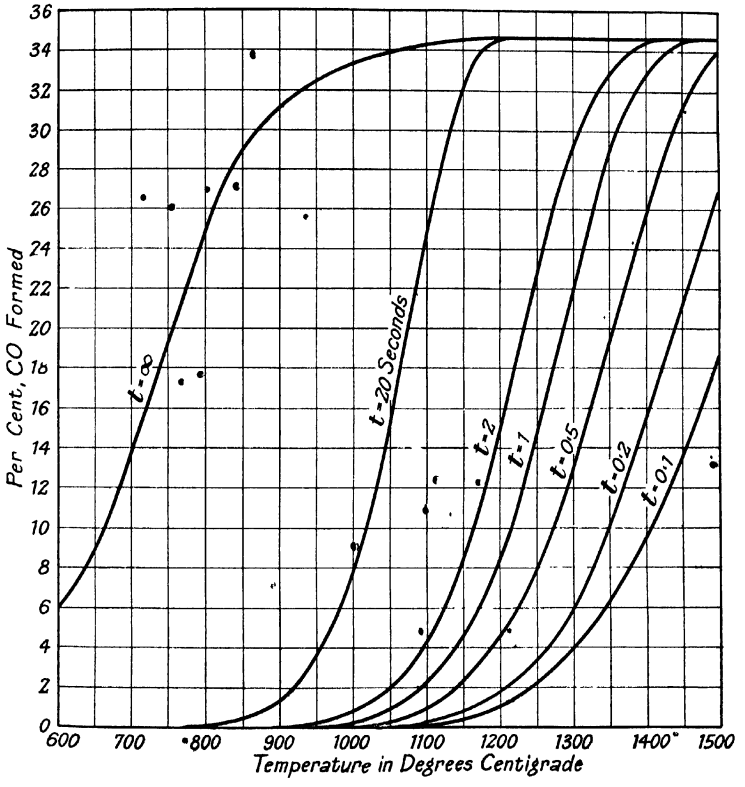

FIG. 4.—EFFECT OF TIME FACTOR UPON CO FORMATION.

With a given fuel depth the temperature alters in the various layers, and therefore it is also very difficult to determine the average fuel bed temperature, especially as the CO formation rate in no way increases proportionately with the temperature.

To show by way of example of what order are the time factors available in practice, the following example is given:—

Assume 1 ton of coal giving 120,000 cubic feet of producer gas being gasified per

hour in a producer 10 ft. internal diam. and having a fuel depth of 3 ft. at a temperature of 1100° C. Assume further that air used = 60 per cent of gas = 72,000 cubic feet per hour. Say average volume of gases in fuel bed = 96,000 cubic feet at N.T.P. or at 1100° C. = 483,000 cubic feet per hour, *i.e.* gas volume per second = *134 cubic feet.*

Assuming that half of the producer fuel bed volume consists of voids inside the fuel particles and surrounding the same, then the 3 feet fuel bed will leave a space for the gases of

$$\frac{\pi}{4} 10^2 \times 3 \times \tfrac{1}{2} = 117{\cdot}6 \text{ cubic feet};$$

i.e. time factor is of the order of 1 second.

We may therefore conclude that in the usual gas producer practice the average time factor for the gases in the hot zones will be of the order of $\frac{1}{2}$ to 3 seconds, and that therefore, unless very high temperatures exist, there is not sufficient time for the CO formation to be completed.

Not only is the time factor and the temperature of importance, but the physical state [1] of the fuel during the process of gasification must simultaneously be borne in mind. The effect of the porosity, the heat conductivity, the exposed surface of each fuel particle, and the catalytic effect of minerals in the ash are items about which only the very slightest idea can be obtained from the ordinary fuel tests, and yet with insufficient knowledge of these properties it is impossible to adapt to practice right away the laboratory investigations of the various researchers quoted. However, the research work carried out hitherto enables us to lay down the ideal conditions for the production of a gas high in CO, viz.—

(*a*) **That the fuel surface exposed should be as large as possible.**
(*b*) **That the time of contact between the fuel and the gas is made as high as possible.**
(*c*) **That the temperature should be maintained as high as practicable.**

Item (*a*) is, as already mentioned, a factor that is only determined by the fuel itself, but in so far as the surface factor depends upon the size of the particles of the fuel it is within the users' or designers' power to choose what fuel to purchase. It should in this connection be borne in mind that finely graded fuel causes a large pressure loss in the fuel bed, and also tends to increase the quantity of heat lost by solid fuel particles being carried away with the gas.

Item (*b*).—This can be allowed for in the design by making a producer of large dimensions, especially by increasing the fuel depth, or working the producer at a slow rate of gasification, of which methods the former is more likely to be commercially efficient than the latter.

Item (*c*).—To maintain a high temperature in the fuel bed can be achieved by working the producer at a high rate of gasification, which, however, has the opposite effect to the requirements of item (*b*), but the main limitations in this respect are the clinker formation troubles, which will always occur when using an air blast without steam, unless, of course, a special type of slagging gas producer is used.

[1] See Boudouard, *s.v.*, and see also Rhead and Wheeler, *J. Chem. Soc.*, 1912, p. 831.

Apart from the practical difficulties, it will be obvious from a study of the curves in fig. 4 that an increase in temperature (item *c*) is far more effective in regard to the gas quality than an increase in the fuel depth or time factor (item *b*).

To work gas producers with a dry air blast has, generally speaking, not been very successful in practice, not only on account of the excessive amount of clinker formation attendant thereupon, but also because a very large heat loss is involved in the formation of CO only from carbon.

The ultimate reaction is :—

$$2C + O_2 \longrightarrow 2CO + 58{\cdot}8 \text{ cals.},$$

showing that 24 grammes of carbon when burnt to CO liberate 58·8 calories; in other words, 30 per cent of the heat in the carbon as supplied to the producer. As some CO_2 is always formed in addition to the CO, it is obvious that the gas producer efficiency (if the gas is to be used cold) will never be over 70 per cent, and generally very much lower, since heat losses in ash, dust, tar, and by leakages will have to be added to the radiation and sensible heat losses caused by the combustion of the carbon to CO and CO_2.

It is usual to introduce another gas (generally steam) whose reaction with carbon is endothermic, with the air to the producer, whereby some of the heat, which would otherwise be lost in radiation or as sensible heat in the hot gases, is regained as potential heat in the shape of hydrogen. Clinkering difficulties are simultaneously decreased.

(2) THE EFFECT OF STEAM OR OTHER ENDOTHERMAL AGENT UPON HOT CARBON

Since steam is the cheapest form in which we can obtain a pure gas which reacts endothermally with carbon, it has so far always been used in gas producers for this purpose. From a purely theoretical point of view, there is no reason why carbon dioxide, which also reacts endothermally with hot carbon forming double its own volume of carbon monoxide, could not be used for the same purpose, but for practical reasons, as will be discussed later, the process, if carried out in this way, would, generally speaking, not be commercially economical.

The principal reactions between steam and hot carbon are :—

$$C + H_2O = CO + H_2 - 28{\cdot}8 \text{ cals.} \quad . \quad . \quad . \quad . \quad . \quad (5)$$

$$C + 2H_2O = CO_2 + 2H_2 - 18{\cdot}8 \text{ cals.} \quad . \quad . \quad . \quad . \quad (6)$$

In other words, the combination of steam with hot carbon results in the production of a mixture of gases consisting of carbon monoxide, carbon dioxide, and hydrogen, at the same time causing a considerable heat absorption. In actual practice some of the steam is not decomposed by the carbon and is mixed with the other gases, all of which, if given sufficient time to interact, may be considered to be in a state of dynamic equilibrium with one another in accordance with the following reversible reaction :—

$$H_2O + CO \rightleftarrows H_2 + CO_2 \pm 10 \text{ cals.} \quad . \quad . \quad . \quad . \quad . \quad (7)$$

The investigation of the interactions between steam and carbon has been made in the first instance by Harries[1] and Farup,[2] the latter studying especially the reactions for the temperature range of 820° to 910° C., the gases being left in contact with the carbon for a considerable time.

Harries passed steam over charcoal heated to temperatures between 674 and 1125° C. in an electric furnace and obtained the following results :—

TABLE 5

HARRIES' EXPERIMENTS WITH WATER VAPOUR AND CHARCOAL

Temperature ° C.	Gas (Litres per sec.).	Volumetric Gas Analysis.				Equilibrium Constant. $K = \frac{(H_2O)(CO)}{(CO_2)(H_2)}$	K (calculated Luggin).
		H_2	CO	CO_2	H_2O		
674	0·9	8·41	0·63	3·84	87·12	1·70	0·49
758	1·8	22·28	2·67	9·23	65·82	·85	·70
838	3·28	32·77	7·96	12·11	47·15	·94	·98
861	5·3	36·48	11·01	13·33	39·18	·89	1·07
954	6·3	44·43	32·70	5·66	17·21	2·25	1·41
1010	6·15	47·30	48·20	1·45	3·02	2·12	1·65
1060	9·8	48·84	46·31	1·25	3·68	2·78	1·88
1125	11·3	50·73	48·34	·60	·303	·48	2·11

Although not definitely stated by Harries, it would appear, from the close agreement between Luggin's calculated figures for the equilibrium constant K and those based on the actual observations, that the gases must have been so long in contact with the carbon, or one another, that the equilibrium point was nearly attained. The same result is also arrived at if one makes a comparison with the equilibrium constant values calculated by Hahn[3] :—

Temperature ° C.	600	800	986	1100	1400	1600
$K = \frac{(H_2O)(CO)}{(CO_2)(H_2)}$	·37	·91	1·57	2·07	3·07	3·8

In other words, Harries' figures, although of great value from a pioneer and scientific point of view, refer to conditions of reaction times not obtainable in gas producer practice, where the duration of contact between the gases and carbon is of the order of a few seconds.

A most valuable contribution to our knowledge of the interactions between

[1] *J. f. Gasbel.*, 1894.
[2] *Zeit. f. anorg. Chemie*, 1906, p. 276.
[3] *Zeit. f. physik. Chemie*, 1903, p. 385.

steam and carbon has been made by Clement and Adams,[1] some of whose experimental results have been abstracted and are shown in Table 6.

TABLE 6 (Clement and Adams)

EFFECT OF TIME AND TEMPERATURE UPON DECOMPOSITION OF STEAM BY HOT CARBON

Temperature in °C.	Time of Contact in Secs	Composition of Dry Gas, per cent.					Composition of Total Gas, per cent.					Per cent of Steam decomposed.
		CO_2	CO	H_2	CH_4	Total	H_2O	CO_2	CO	H_2	CH_4	
Coke:												
800	1·02	4·8	34·4	42·5	..	81·7	99·1	·06	·40	·49	..	·52
,,	·416	4·2	35·0	45·5	..	84·7	99·6	·02	·16	·21	..	·21
900	8·35	9·8	30·4	45·7	2·0	87·9	75·4	2·75	8·51	12·78	·57	15·7
,,	2·96	6·8	39·8	47·5	1·9	96·0	89·5	·75	4·36	5·22	·21	6·04
,,	1·47	7·9	36·0	46·6	1·8	92·3	92·9	·61	2·78	3·60	·14	4·1
,,	·5	6·0	40·8	47·5	1·9	96·2	96·2	·24	1·62	1·88	·08	2·11
,,	·245	5·9	39·5	48·0	1·2	94·6	97·9	·13	·90	1·09	·03	1·17
1000	6·98	13·6	28·6	49·3	2·6	94·1	69·8	4·38	9·16	15·8	·84	20·2
,,	3·42	10·7	33·6	50·3	2·0	96·6	78·4	2·40	7·53	11·28	·45	13·5
,,	2·64	9·6	35·1	48·4	1·9	95·0	81·3	1·89	6·92	9·56	·37	11·45
,,	1·025	7·8	38·0	48·5	1·6	95·9	88·7	·91	4·48	5·71	·19	6·54
,,	·244	7·1	39·0	48·1	1·9	96·1	96·[illegible]	·27	1·47	1·81	·08	2·02
1100	7·97	14·6	28·1	53·1	1·4	97·2	34·9	9·8	18·8	35·6	·90	52·1
,,	1·97	12·8	28·9	51·2	1·5	94·4	67·6	4·4	9·92	17·6	·51	21·75
,,	1·034	13·3	30·5	52·5	1·9	98·2	76·8	3·16	7·22	12·41	·44	14·87
,,	·259	13·3	30·4	53·1	1·4	98·2	92·0	1·09	2·48	4·32	·11	4·76
1200	11·05	·3	51·8	42·9	1·0	96·0	5·0	·3	51·3	42·5	1·0	90·8
,,	4·48	·6	52·1	43·1	1·2	97·0	17·0	·5	44·6	37·0	·9	71·3
,,	·866	7·4	39·3	49·4	1·2	97·3	74·8	1·92	10·18	12·80	·31	15·5
,,	·337	3·6	46·3	47·0	1·9	98·8	83·0	·62	8·0	8·11	·32	9·79
1300	4·32	·4	50·5	43·7	1·9	96·5	·0	·4	52·4	45·3	2·0	100
,,	1·245	·3	49·5	45·8	1·9	97·6	17·4	·3	41·9	38·8	1·6	70·9
Charcoal:												
1100	6·92	..	..	..	..	..	·9	·0	50·5	47·3	1·3	98·5
,,	5·62	..	..	..	..	..	·9	·1	50·1	48·1	·8	98·3
,,	3·37	..	..	..	..	..	12·3	·3	43·3	43·4	·7	78·3
,,	1·77	..	..	..	..	..	20·8	·4	39·6	39·0	·2	65·8

To the originally published figures given in this table has been added the calculated quantity of the introduced steam that was decomposed in each experiment, the calculation having been based upon the average figures for the steam

[1] *Bureau of Mines, Bulletin No. 7.*

quantity decomposed, determined from both the hydrogen-containing gases ($H_2 + CH_4$) and the oxygen-containing gases ($CO + CO_2$).

The curves in fig. 5 show the relation between temperature, time of contact, and quantity of steam decomposed as well as the effect of using various types of carbon (coke or charcoal). The main points to be observed from the curves are :—

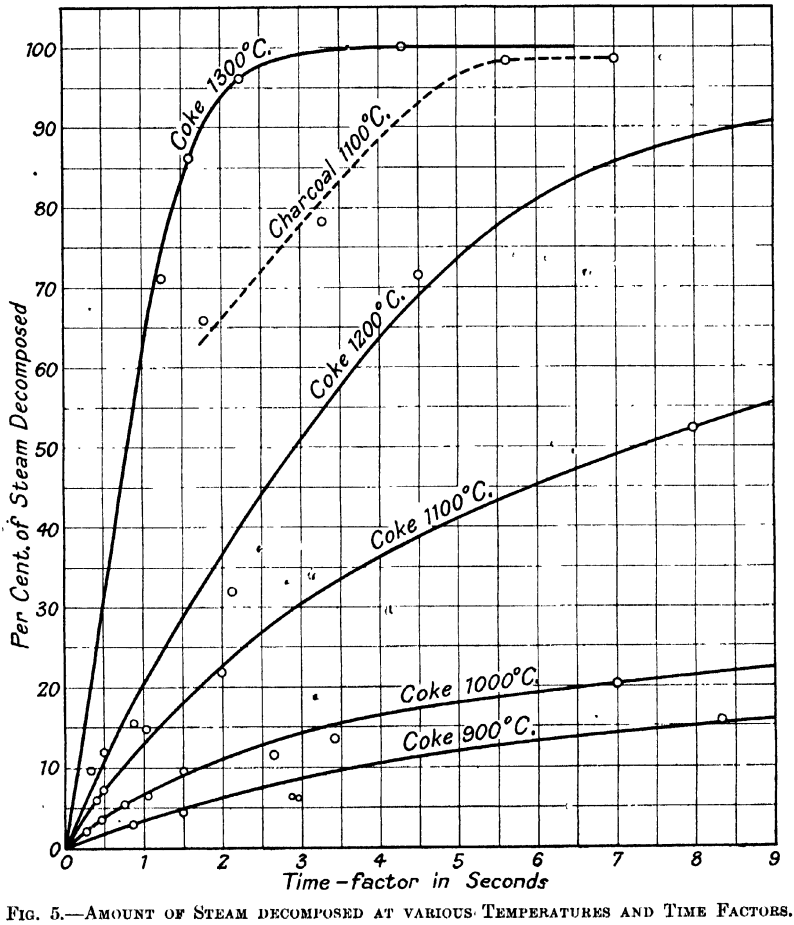

FIG. 5.—AMOUNT OF STEAM DECOMPOSED AT VARIOUS TEMPERATURES AND TIME FACTORS.

(1) That very much higher temperatures are required than those shown by other researchers, if a reasonable quantity of the steam introduced is to be decomposed and gas made from it.

(2) That, when working under low-temperature conditions, the time the gases and carbon are in contact must be much more than proportionally extended if the same quantity of steam is to be decomposed as at higher temperatures.

(3) That the nature of the fuel has a very great effect upon the rate of the reaction.

With regard to the effect of the nature of the fuel, some experiments have been made by Gwosdz[1] showing the most divergent results when using artificial carbon, charcoal, or coke; from these researches it is to be concluded that not only is it necessary to bear in mind the relative porosity, the heat conductivity, and the exposed surface of the fuel, but it is equally necessary to allow for the catalytic effect of the mineral impurities in the fuel (ash).

In other words, **the same general principles which underlie the reactions between air and hot carbon** (page 14) **also apply in the case of steam.**

Whereas dry air produces only two gases (carbon monoxide and dioxide) when passed over carbon, steam in addition also produces hydrogen, and probably also some methane as well. Since the final composition of the gas is of practical importance, it is therefore necessary to study the relative quantities produced of each of the gas components at the various time factors. To facilitate this, curves covering the fluctuations in the composition of the dry "water gas" are shown in figs. 6 and 7, the bases for which have been obtained from Messrs. Clement and Adams' work.

Fig. 6 shows three series of curves, one for each of the gaseous components, carbon dioxide, carbon monoxide, and hydrogen, to show the individual effect of varying temperatures and time contacts.

Fig. 7, the results of which have been abstracted from the curves in fig. 6, show the likely variations in the gas compositions with the temperature under time-contact conditions of 1 or 3 seconds, *i.e.* such as are likely to be available under actual gas-producing conditions.

Before discussing the conclusions that can be drawn from the curves in figs. 6 and 7, it should be mentioned that the figures given by Clement and Adams for the total dry gases produced always show a divergency from the total 100 per cent, which divergency was proved to be due to the presence of nitrogen and oxygen, the oxygen being about 21 per cent of the total of the two. Since in practice air leakages of this kind could not take place, all figures in the curves have been based upon the sum of the CO_2, CO, H_2 and CH_4 fractional volumes being equal 100. Further, some of the original figures vary somewhat from those represented by the curves as drawn, although the author has endeavoured as far as possible to adhere to the original experimental figures obtained.

The quantity of *carbon dioxide* formed increases with the temperature and time factor between 900 and 1100° C. to about 15 per cent, when it suddenly decreases to about zero for 1200° C. and over even for short-time factors.

The quantity of *carbon monoxide* formed decreases with the temperature and time factor between 900 and 1100° C. to about 30 per cent, when it very quickly increases to 50 per cent and over for 1200° C. and higher temperatures.

The quantity of *hydrogen* formed increases with the temperature and time factor between 900 and 1100° C. to about 55 per cent, but not as rapidly as the

[1] J. Gwosdz, *Zersetzung von Wasserdampf*, Diss., Berlin, 1918.

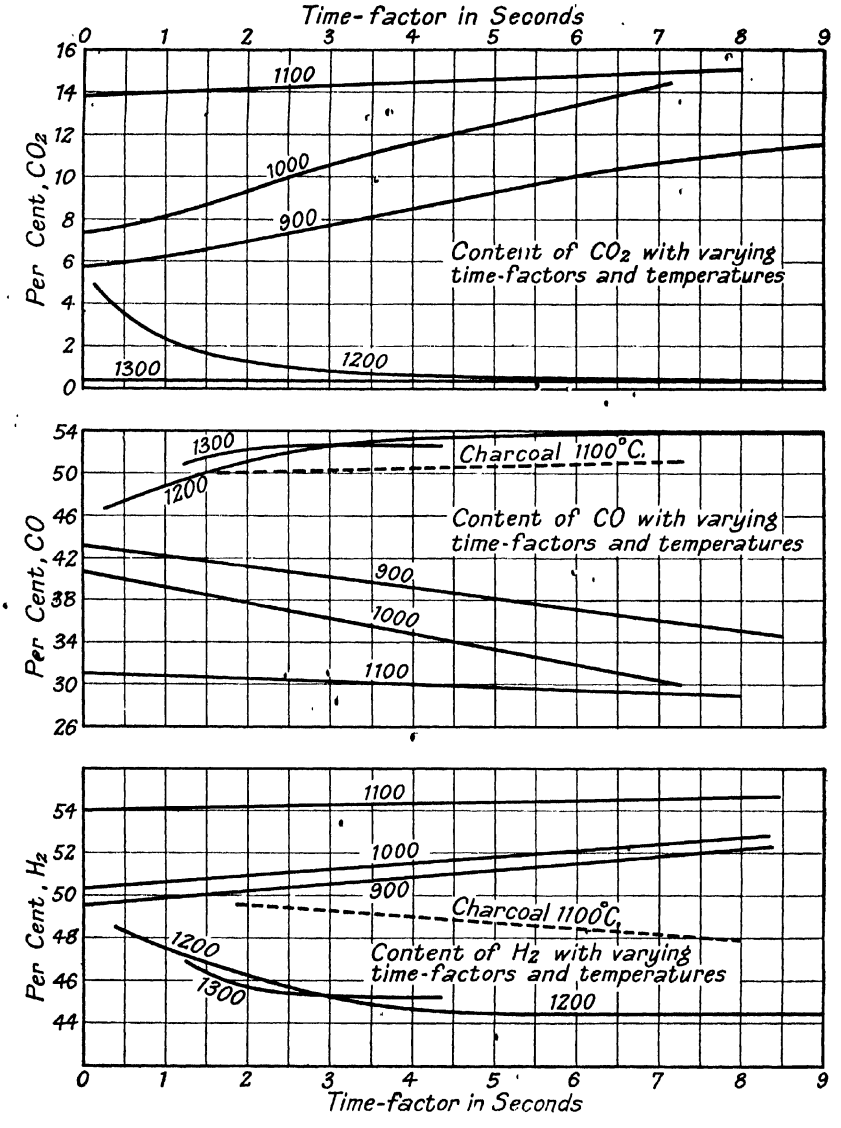

FIG. 6.—AMOUNT OF VARIOUS WATER GAS CONSTITUENTS AT VARIOUS TEMPERATURES AND TIME FACTORS.

increase and decrease of the CO_2 and CO respectively; further, between 1100° C. and 1200° C. it decreases again to less than 50 per cent.

From these conclusions and for the fuel in question it would appear as if the reaction

$$C + 2H_2O \longrightarrow CO_2 + 2H_2 \quad . \quad . \quad . \quad . \quad . \quad (6)$$

is more predominant between 900 and 1100° C. than the reaction

$$C + H_2O \longrightarrow CO + H_2, \quad . \quad . \quad . \quad . \quad . \quad . \quad (5)$$

while the latter, on the other hand, exists exclusively above 1200° C.

Whether this actually be so or not is somewhat difficult to say, since as soon

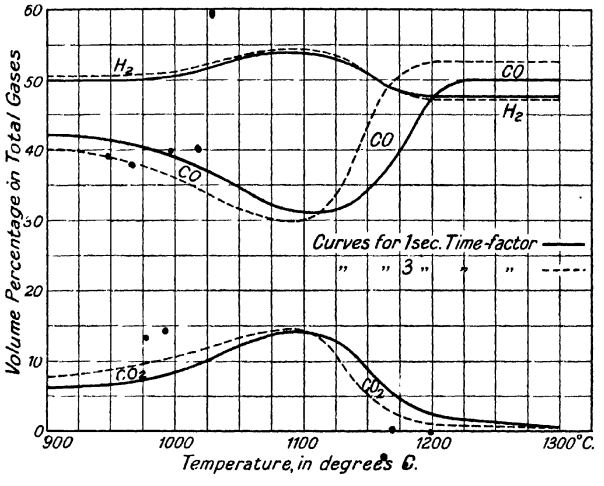

Fig. 7.—Variation in Composition of Water Gas at various Temperatures.

as any CO_2 or CO is formed they react with the carbon in accordance with the reaction

$$2CO \rightleftarrows CO_2 + C;$$

consequently it is possible that this "secondary" reaction may to some extent "mask" the results obtained.

Since a mixture of air and steam is often introduced, it will be found of interest to consider the relative rates of decomposition of carbon dioxide and steam. For this reason the curves in fig. 8 have been drawn, the basis for the results given being Messrs. Clement and Adams' research. It would appear from these curves that at above 1100° C. there is a greater tendency to decompose carbon dioxide than steam, while at about 1100° C. the relative rates of decomposition are about equal, and below 1100° C. the rate of decomposing steam is larger than that of CO_2.

A point worthy of note in fig. 7 is the sudden sluggishness in the formation of CO between 1000° and 1100° C., which also has been referred to in the researches by Rhead and Wheeler,[1] who on passing oxygen only over carbon find that the

[1] "The Mode of Combustion of Carbon," *Trans. Chem. Soc.*, 1913, vol. 103.

CO content increases with the temperature, then suddenly drops, and again suddenly increases with increase in the temperature. For 60 seconds or longer time contact they found this phenomenon appearing between 700° and 900° C.; in the same way, the two CO curves on fig. 7 show that by increasing the time factor the fluctuations take place at lower temperatures.

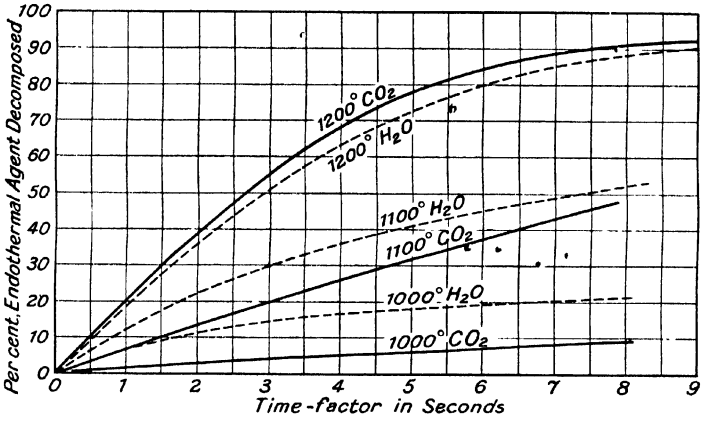

FIG. 8.—RELATIVE QUANTITIES DECOMPOSED OF CO_2 OR H_2O OVER HOT COKE.

Methane CH_4 may be formed by the interactions of the steam, carbon, and the gases produced therefrom, the following reactions being possible :—

$$C + 2H_2 = CH_4 \quad +22{\cdot}1 \text{ cals.}$$
$$CO + 3H_2 = CH_4 + H_2O \quad +50{\cdot}9 \text{ cals.}$$
$$CO_2 + 4H_2 = CH_4 + 2H_2O + 40{\cdot}9 \text{ cals.}$$

Although the matter of the direct formation of methane by these reactions has been questioned considerably by various investigators in the past, yet the author has proved the presence of methane in gas samples taken from the lower part of the generators where no volatile matter could exist in the fuel. Further, producer gas made from coke or anthracite will contain appreciable quantities of methane which could in no way be accounted for from the traces of volatile matter contained in fuels of this kind.

In all of Clement and Adams' tests (Table 6) the presence of CH_4 to the extent of 1 to 2 per cent of the total dry gas was proved. Further, it is mentioned by them that even in cases where the coke was heated for a long time previous to the introduction of the steam, the content of CH_4 in the "water gas" was not affected.

The balanced reactions at various temperatures between methane and the components of the reaction of steam with hot carbon have been examined by Mayer and v. Altmeyer [1] in Germany and Sabatier and Vignon [2] in France. Although all their tests were conducted in the presence of catalytic agents, such as lime,

[1] *Jour. f. Gasbel.*, 1909.

[2] Vignon, *Ann. Chim.* 15, 42-60.

nickel, and cobalt, which are not likely to be present to any large extent in most gas-producer fuels, yet the results obtained will serve as a guide for possible future developments of gas production.

On the basis of Mayer and v. Altmeyer's observations the figures in Table 7 were calculated for the state of completed dynamic equilibrium.

TABLE 7

METHANE REACTIONS (Mayer and v. Altmeyer)

Reaction: $CO_2 + CH_4 \rightleftarrows 2CO + 2H_2$

Temperature °C.	Volumetric Gas Composition.			
	CO	H_2	CO_2	CH_4
427	3·44	3·44	46·56	46·56
527	12·83	12·83	37·17	37·17
627	29·44	29·44	20·56	20·56
727	43·06	43·06	6·94	6·94
827	48·10	48·10	1·90	1·90

Reaction: $CH_4 + H_2O \rightleftarrows CO + 3H_2$

Temperature °C.	Volumetric Gas Composition.			
	CO	H_2	CH_4	H_2O
427	2·79	8·37	44·43	44·43
527	8·13	24·39	33·73	33·73
627	15·74	47·22	18·51	18·51
727	21·42	64·26	7·17	7·17
827	23·81	71·43	2·38	2·38

Reaction: $CH_4 + 2H_2O \rightleftarrows CO_2 + 4H_2$

Temperature °C.	Volumetric Gas Composition.			
	CO_2	H_2	CH_4	H_2O
327	1·9	7·69	30·16	60·32
427	4·89	19·56	25·19	50·38
527	8·84	35·36	18·60	37·20
627	12·84	51·36	11·92	23·84
727	15·75	63·00	7·08	14·16
827	17·55	70·20	4·08	8·16

Although the amount of formation of methane decreases with rising temperature, yet it is probable that the catalytic effect of the minerals in the ash will considerably affect the amount formed from various fuels.

Before leaving the subject of the use of endothermal agents in the gas producer, reference may be made to a suggestion made many times in the past for the purpose of avoiding the cost of supplying the steam and to bring about the endothermal reactions in the gas producer, namely, to *add products of combustion to the air blast* and thus rely upon the carbon dioxide thereby introduced to bring about the desired effect. Products of combustion unfortunately do not consist of carbon dioxide only, since this is diluted with nitrogen many times its own volume, and, as will be obvious from the calculations below, this is the main drawback against extensive use of products of combustion as an endothermal agent.

Assume with the addition of *steam only* to the air blast that we obtain the following *operating conditions* :—

Steam per kg. coal = 1·5 kg. (78° blast temp.).
Gas ,, ,, = 3·5 cub. m. (N.T.P.).
Heating value of gas = 1370 cals./cub. m. (154 B.T.U./ft.^{3}) net.

When *adding products of combustion* let us assume that they have the following composition :—

18 per cent	. . .	CO_2.
82 ,,	. . .	Inerts.

Now let us assume that it is permissible to reduce the heating value of the gas by 20 per cent (from 155 to 124 B.T.U./ft.^{3}) due to the introduction into the gas of the inert nitrogen from the products of combustion. This means that if all the CO_2 is decomposed, we can add per cub. m. of diluted gas :—

$$20 \times \frac{100}{82} = 24{\cdot}4 \text{ per cent or } 0{\cdot}244 \text{ cub. m. of products of combustion.}$$

The weight of CO_2 in this volume is

$$0{\cdot}244 \times \frac{18}{100} \times 1{\cdot}964 = {\cdot}086 \text{ kg.}$$

The relative endothermal effect of steam or CO_2 on hot carbon is as follows :—

$$C + CO_2 = 2CO - 38{,}800 \text{ calories,}$$
$$C + H_2O = CO + H_2 - 28{,}800 \text{ calories ;}$$

i.e. the endothermal effect of 1 kg. CO_2 is equivalent to that from

$$\frac{38{\cdot}8}{28{\cdot}8} \times \frac{18}{44} = 0{\cdot}55 \text{ kg. of steam.}$$

Therefore the addition of 0·244 cub. m. of products of combustion to the air blast will replace

$$0{\cdot}086 \times 0{\cdot}55 = 0{\cdot}0473 \text{ kg. steam.}$$

The volume of the diluted gas per kg. coal being $3{\cdot}5 \times \frac{155}{124} = 4{\cdot}38$ cub. m., the above rough calculation shows that the saving in steam is 0·207 kg. per kg. of coal; *i.e.* 13·8 per cent.

When the difficulties and expense to be anticipated in practice by handling hot products of combustion are borne in mind, and that the saving in steam thereby obtained is only small, and even this only under the assumption that a lower-grade gas is as satisfactory as a higher grade, it is clear that at the present stage the use of CO_2 as an endothermal agent in producer gas production is not likely to present any great commercial advantages (see pp. 273-279 for practical applications). Whether in the future it will be possible to produce products of combustion containing a low quantity of nitrogen is yet undecided; but if this be brought about by, say, the use of cheap industrial oxygen, then perhaps we may look for the use of steam in gas-producer reactions being generally replaced by carbon dioxide.

(3) THE FORMATION OF OTHER COMBUSTIBLE COMPONENTS OF PRODUCER GAS THAN THOSE FORMED BY MEANS OF AIR OR STEAM

In the preceding we have considered the use of such fuels as charcoal, coke, or anthracite, all of which, except for their ash content, may be looked upon as carbon.

On the other hand, most of the available industrial fuels are not carbon and ash only, but contain "volatile matter" such as hydrocarbons and carbohydrates, which are eliminated from the fuel in a more or less decomposed state by a process of distillation of gradually increasing temperature brought about by direct contact with the hot gases made in the lower part of the gas producer from the reactions between the air and steam with the coked fuel residue.

The "volatile matter" in a fuel may be classified into three main components:—

(*a*) Water of dehydration and decomposition.
(*b*) Tar or oils.
(*c*) Gas.

The amount of gas formed from the volatile matter will, apart from the nature of the fuel, depend upon the rate of heating and the temperature to which the fuel is submitted; the higher these two factors, the larger will be the gas quantity made, since the tar or oils will be decomposed or "cracked" into gas and tar compounds, richer in carbon.

As an example of how the nature of the fuel will affect both the quantity and composition of the distillation gas, Table 8 shows a series of results (obtained by the author) of distilling different types of fuel under the same conditions.

TABLE 8

DISTILLATION GASES FROM VARIOUS FUELS

Distillation Temperature = 800° C.

	Bituminous Coal.			Lignite.	Peat.	Wood.
	Nottinghamshire.	France.	South Africa.	Australia.	Australia.	South America.
Volatile matter, per cent.	31·7	15·56	28 35	50·8	67·9	71·20
Gas volume at N.T.P., cub. ft. per ton	7,276	8,762	8,164	13,470	14,100	7,938
Average volumetric gas analysis, per cent:						
CO_2 . . .	3·2	1·6	10·0	21·5	21·0	22·3
C_2H_4 . . .	2·9	·8	1·1	1·0	0·6	1·4
O_2	1·3	·9	1·5	0·7	0·4	0·5
CO . . .	8·0	4·9	11·2	18·5	26·2	20·4
H_2 . . .	39·8	57·6	46·6	32·2	33·6	32·8
CH_4 . . .	39·8	32·2	20·9	24·2	16·4	20·9
N_2 . . .	5·0	2·0	8·7	1·9	1·8	1·7
Cal. Val. B.T.U. net per cub. ft. N.T.P.	572·3	508	393	369	362	388·8

From the gas analyses it will be obvious that the components of the distillation gas, with the exception of methane and ethylene, are the same as those ordinarily obtained by the joint action of steam or air upon the carbon.

Since the heating value of the distillation gas is always higher than that of the producer gas obtained from the carbonized residue, the admixture of the former will cause an increase in the heating value of the final gas leaving the producer.

When it is borne in mind that the quantity of distillation gas may constitute as much as 20 per cent of the final gas volume, it is obvious that it is an important factor to be considered when making producer gas from fuels rich in volatile matter.

(4) EXAMPLES OF ACTUAL GASIFICATION RESULTS

In the preceding we have studied from a theoretical point of view how the air or steam added to the fuel or the content of volatile matter in the same may affect the gasification results, and in the following we shall deal with investigations of producer gas manufacture on a larger scale than the laboratory researches hitherto referred to.

That nearly complete conversion of the carbon into carbon monoxide can be achieved in practice will be obvious from the following tests on producer gas made from *dry air blast*:—

	Ebelmen (1840).		Dowson.	Georgs-Marienhuette[1] (1918).
Fuel	Charcoal.	Coke.	Coke.	Coke.
Gas analysis:				
CO_2	·5	·83	1·4	·3 to ·7
CO	33·3	33·53	32·6	33·0 to 33·5
H_2	2·8	1·48	1·0	·1
CH_4	..	..	..	1·2 to 1·3
N_2	63·4	64·16	65·0	..

The first thoroughly detailed investigation on *the stages of the gas-making in the producer* was made by Karl Wendt,[2] who made a series of tests on a gas producer shown in outline in fig. 9.

The producer was 5′ 9″ (1750 mm.) in diam., while the fuel depth was 5′ 3″ (1600 mm.). At regular intervals of 10″ (250 mm.), commencing at the grate level, holes were drilled through the steel shell and brick lining through which the temperatures were measured by pyrometer, and gas samples taken. The fuel in use was bituminous coal, and two series of tests were made, one with dry air blast and one with a steam and air mixture, the results of which are given in Tables 9 and 10 respectively.

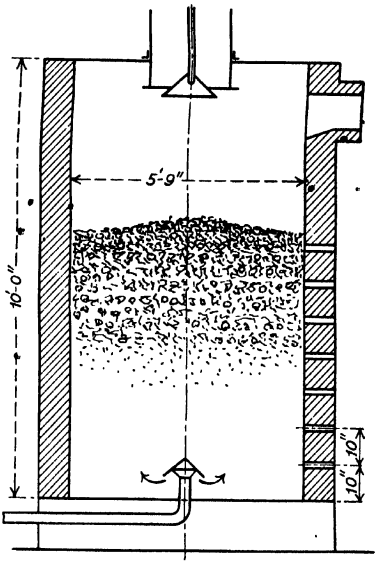

FIG. 9.—K. WENDT'S PRODUCER.

Wendt mentions that the gasification efficiency, based on cold gas, but including steam required, was 3½ per cent higher in the case of the steam-blown producer than for the air-blown one; but since the gasification rate was higher in the case of the latter, this economy might be questioned from a commercial point of view. But a point which is of great importance is that at the temperature of 1400° C. for the air-blown producer, most fuels would cause excessive clinker formation, which would be considerably diminished with the 1100° C. temperature of the steam-blown producer.

[1] *Iron and Coal Trades Review*, July 5, 1918.

[2] *Forsch. V. d. Ingenieure*, 1905.

TABLE 9

DRY AIR BLAST (Wendt)

Rate of Gasification, 301 kg. coal per hour (26·2 lbs./sq. ft. hour, or 130 kg./sq. m. hour)

Height above Grate.	Gas Analysis, per cent.					Temperature °C.
	CO_2	CO	H_2	CH_4	N_2	
0 mm.	15·0	9·7	..	..	75·3	..
250 ,,	·2	34·1	..	..	65·7	1400
500 ,,	·2	34·3	..	..	65·5	..
750 ,,	..	34·5	·4	..	65·1	..
1000 ,,	·4	33·4	2·4	·3	63·5	1250
1250 ,,	·6	30·0	11·7	·6	57·1	..
1500 ,,	1·0	28·9	9·8	2·0	58·3	1030
Gas outlet	·7	31·3	6·3	2·4	59·3	580

TABLE 10

AIR AND STEAM BLAST (Wendt)

Rate of Gasification, 208 kg. coal per hour (17·4 lbs./sq. ft. and hour, or 86·5 kg./sq. m. and hour)

Height above Grate.	Gas Analysis, per cent.					Temperature °C.
	CO_2	CO	H_2	CH_4	N_2	
0 mm.	11·4	..	..	..	79·1	..
250 ,,	9·3	22	10·8	·4	57·5	1100
500 ,,	5·5	28	13·7	·9	51·9	..
750 ,,	3·0	32·7	17·9	1·2	45·2	925
1000 ,,	5·0	28·7	21·8	5·0	39·5	..
1250 ,,	6·0	28·3	20·7	4·8	40·2	810
1500 ,,	5·3	28·0	19·0	4·1	43·6	..
Gas outlet	5·3	26·8	14·6	3·4	49·7	440

Typical of the high temperatures of the air-blown producer is the very much more rapid formation of CO_2 and the following reduction to CO, the latter being completed about 10″ above the grate, while the gases have to pass through 30″ fuel depth, when steam is added, before the highest CO content is reached.

On the other hand, there does not appear, in the case of the steam and air-blown producer, to be any difference in the time required to complete the formation of CO from the CO_2 or hydrogen from the steam; probably this is due to the temperature existing in the lower zones being about 1100° C., at which the rates of decomposition of CO_2 or steam are about equal (see fig. 8).

It will be noted that some divergency exists between the final gas analysis as taken from the gas outlet pipe and the last previous stage, which probably will have to be attributed to the fact that the composition of the gases at the edges of the fuel bed (where stage samples were taken) differ from those generated in more central fuel layers.

Later, Dr. K. Neumann [1] made a series of investigations on the stages of the

TABLE 11

GAS ANALYSIS AT VARIOUS STAGES USING WET OR DRY BLAST (Neumann)

Air Volume per hour cub. m. N.T.P.	Approximate Blast Temperature ° C.	Grammes of Steam per cub. m. N.T.P.	Height above Grate.	Gas Analysis, per cent.					Gas Temperature ° C.
				CO_2	CO	H_2	CH_4	N_2	
42·8	68	·316	165 mm.	12·0	15·4	13·7	·1	58·8	1150
			540 mm.	8·6	23·4	16·3	·2	51·5	820
			Outlet	12·5	17·1	14·4	·4	55·6	410
102	52	126·5	165 mm.	7·0	22·8	9·6	·1	60·5	1260
			540 mm.	2·8	32·5	11·1	·1	53·5	890
			Outlet	5·0	27·3	10·9	·0	56·8	480
165	47	92·2	165 mm.	4·4	27·3	7·5	·1	60·7	1340
			540 mm.	1·3	33·6	8·3	·1	56·7	1080
			Outlet	2·4	29·9	8·8	·1	58·8	610
46	18	16·5	165 mm.	3·2	27·6	1·6	..	67·6	1150
			540 mm.	·9	31·5	2·8	..	64·8	610
			Outlet	3·8	24·8	2·4	..	69·0	330
97	11·5	10·8	165 mm.	3·0	27·5	1·7	..	67·8	1350
			540 mm.	3·0	27·5	1·7	..	67·8	960
			Outlet	2·7	29·0	3·1	..	65·2	440
166·5	16	14·7	165 mm.	3·6	26·6	1·7	..	68·1	1490
			540 mm.	·1	32·9	2·0	..	65·0	1050
			Outlet	·9	30·6	1·4	..	67·1	480

[1] *Zeit. d. V. d. Ing.*, 1914. 1481.

producer-gas formation when gasifying carefully graded coke with varying quantities of steam and air in a producer 470 mm. ($18\frac{1}{2}''$ diam.) × 600 mm. (2′ 0″) fuel depth. Some of the results obtained are shown in Tables 11 and 13.

Apart from this table bringing us to similar conclusions as Wendt's tests, it would appear as if the gas quality changes very much in the space between 540 mm. above the grate level and the gas outlet pipe.

The 540 mm. level was, however, just below the surface of the fuel, and it can only be concluded that in this respect the tests do not give the right impression. The gas samples were removed about 3″ from the axis of the producer, and hence we can assume that they were either altered in composition in passing through the sampling tubes, or that the gases in the centre varied in composition from those at the edges; presumably the latter has been the main cause of the discrepancy in the gas analyses given by Neumann.

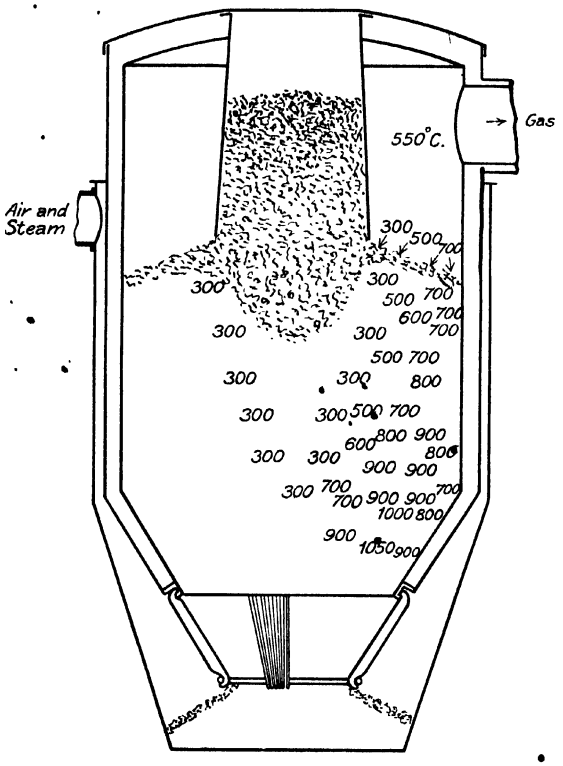

Fig. 10.—Temperature Variation in Mond's Gas Producer.

Evenness of Temperature in various Fuel Layers

The cause for the existence of a different quality of gas at various parts of the fuel bed is in the first instance due to unevenness of temperature, which in its turn is affected not only by the producer design but also by the fuel distribution.

It is a well-known fact that most producers burn more intensely at the circumference than at the centre, since the resistance to the passage of the gas is generally less at the edges than at any other part of the fuel bed. Thus the gases passing through at the edges are not in contact with fuel only, but, further, they are passed through the fuel at a very much quicker speed than the gases at the centre, hence their time for contact will be very much less; and although the edge temperature in its turn becomes higher, yet we generally find the centre gases of a better quality than the edge gases.

To give the reader an idea of how very much the fuel-bed temperatures may alter, fig. 10 shows a sectional elevation drawing of a Mond Gas Producer, on which measurements of actual temperatures have been shown. Although the temperature existing at the various layers of a producer of this type is special to this particular gasification process, yet a similar variation of temperature in the various layers is not an uncommon occurrence in other producers. The diagram shows very clearly that every particle of fuel cannot take part in the gaseous reactions to the same extent, and it is not out of place to mention that the more evenly distributed the temperature becomes in any gas producer, the more efficient will be the gasification process.

TABLE 12

STAGE GAS TESTS FOR VARIOUS FUEL TYPES

Fuel.	Rate of Gasification, lbs./ft.² and hour.	Blast Temperature ° C.	Height above Grate, ft.	Gas Analysis (Dry) Vol. per cent.				
				CO_2	O_2	CO	H_2	CH_4
(*a*) **Before** ashing: Non-caking bituminous coal, 10,500 B.T.U. per lb. in large pieces.	23	77	1	15·4	1·6	4·3	4·4	..
			2	16·6	·4	4·1	4·0	..
			4	18·6	·2	5·6	5·6	·6
			5	15·0	·8	9·6	15·4	..
			Gas outlet.	13·4	·8	14·0	20·2	4·8
(*b*) **After** ashing	23	77	1	15·0	·8	2·1	..	..
			2	16·2	·5	7·3	8·4	·3
			4	17·9	·3	6·4	8·8	·6
			5	14·0	·2	10·0	10·8	·6
			Gas outlet.	12·0	·0	16·4	22·0	5·4
(*c*) Slightly caking bituminous 1½″ nut coal, 12,000 B.T.U. per lb.	26	74	1	·8	19·9	..	..	..
			2	10·4	1·4	18·2	12·4	1·2
			4	9·8	1·0	20·0	21·4	1·8
			8	9·4	·2	20·6	21	3·0
			Gas outlet	8·0	·2	21·8	22·4	4·2
(*d*) Unevenly graded peat (60 per cent moisture) 7100 B.T.U./lb. net on dry substance.	15	60	1	..	20·0	..	..	..
			4	5·0	14·0	3·4	..	..
			8	9·4	9·2	6·4	12·6	1·5
			..	..	..	..	..	..
			Gas outlet.	14·2	3·6	9·2	19·2	2·1

Effect of Nature of Fuel upon Gaseous Reactions

To give an example of how difficult it is to come to a definite conclusion as to the stagewise alteration in the gas composition in the various parts of the fuel bed when using different fuels, the results obtained by the author on a gas producer having more than 10′ total fuel depth are given in Table 12.

Tests (*a*) and (*b*) are typical in so far as they show a distinct difference in the final gas composition before and after the withdrawal of ashes, while a comparison of (*a*) and (*b*) with (*c*) shows a typical difference in results when gasifying two bituminous fuels of varying nature. Fuel (*a*) and (*b*) was supplied in large lumps about 4″ to 2″, which did not in any way alter their shape on heating, and therefore exposed for contact with the gases only a small surface compared with that of fuel (*c*), which on caking together formed a porous coke, and thus exposed a very much larger surface for contact with the gases. The effect of this is very noticeable in the gas analyses in so far as the time for the CO_2 formation and CO and steam reduction needs to be very much longer for the first fuel.

Test (*d*) is interesting in so far as it shows how the state of the fuel bed is altered when using a very wet fuel, and that oxygen may even be found in the gas leaving the generator.

Effect of varying Quantities of Steam

The tests in Table 13 were carried out by Dr. K. Neumann, and show particularly the effect of steam upon the gasification results when using a *constant* depth of fuel; nevertheless they cannot be considered as a good example upon conditions obtainable in practice, because (1) the gasification rates are nearly all lower than those generally obtainable with carefully graded coke, and (2), as will have been obvious from the foregoing (pp. 18 and 19), the fuel depth should be increased with an increase in the steam quantity used.

Of greater practical interest, however, are the tests carried out by Professors Bone and Wheeler, using a Lancashire bituminous fuel, in a 10′ diam. Mond Gas Producer[1] (see fig. 10), coupled together with an air-blast superheater of the Mond type. These tests are summarized in Table 14.

The results have been arranged so as to show the effect of a gradual increase in the steam quantity added to the air (increasing blast temperature); the tests were made in two series, in each of which different fuel depths were employed.

To emphasize further the effect of adding varying quantities of steam to the air blast, the last column of Table 14 contains comparative figures which have been obtained, when using $2\frac{1}{2}$ lbs. of steam per lb. of coal (the Mond Ammonia Recovery Process), with a similar type of fuel to that used in the tests by Bone and Wheeler.

It will be noticed that the gasification rate was higher for the series of lower blast temperature, but when it is borne in mind that much heavier manual work

[1] *Journal of Iron and Steel Institute*, No. 1., 1907, and No. III., 1908.

was entailed in maintaining this higher gasification rate, it becomes a question whether such a procedure would be economical under average working conditions.

TABLE 13.

FINAL GAS ANALYSES, STEAM USED, AND FUEL GASIFIED (Neumann)

Air saturation temperature ° C.	72	65	59	53	52·5	49
Weight of carbon gasified in kgs. per hour	7·00	11·36	17·69	25·35	28·6	33·0
Rate of gasification kg. C/sq. m. and hour	40·4	65·5	102	146	165	190
Weight of steam used in kg. per kg. of carbon gasified	1·820	1·105	·708	·495	·459	·379
Volume of air used in cub. m. per hour at N.T.P.	34·2	52·3	76·1	105·5	119	137
Temperature ° C.	1120	1180	1220	1260	1280	1290
Gas analyses (wet) in volume per cent:						
CO_2	8·81	8·39	6·88	5·26	4·73	4·11
CO	11·68	16·10	20·22	24·02	25·35	25·84
H_2	12·12	11·39	10·31	9·49	9·09	9·19
CH_4	·23	·26	·27	·28	·28	·29
H_2O	22·6	14·35	9·46	5·99	5·28	4·15
N_2	44·56	49·51	52·86	54·96	55·27	56·42

Apart from the decrease in CO content and increase in CO_2 and H_2 content with increasing blast temperature, which has already been referred to, it will be seen that the gas quality for the same blast temperature increases with the depth of fuel, while the gas volume produced from a unit weight of fuel increases with the increasing blast temperature.

W. B. Leech (*Gas Journ.*, 28/6/22) reports that by increasing the fuel depth of the G.L. and C.C. gas producers at Beckton from 5 to 13 feet the combustion temperature of the gas was increased by 200° C., evidently due to increased gas quality.

TABLE 14

SUMMARY OF TESTS BY PROFESSORS BONE AND WHEELER

	2nd Series.				1st Series.					*
Depth of fuel bed	3′ 6″ 1 06 m.				7′ 0″ 2 13 m.					7′ 6″ 2·29 m.
Average hourly rate of gasification	31 4 lbs./ft.² 155 kgs./m.²				20·6 lbs./ft.² 102 kgs./m²					21·4 106
Air blast saturation temperature ° C.	**45**	**50**	**55**	**60**	**60**	**65**	**70**	**75**	**80**	**85**
Gas analysis, volume per cent:										
CO_2	2 35	2 5	1 4	5·1	5 25	6 95	9·15	11·65	13 25	16
CO	31·60	30 6	28 1	27·3	27 30	25·40	21 7	18 35	16·05	11
H_2	11·60	12 35	15 5	15 5	16 60	18 3	19 65	21·8	22 65	26
CH_4	3 0	3 0	3 0	3·0	3·35	3 4	3·4	3 35	3·5	3
N_2	51·4	51·55	49 0	49·0	47 5	45 9	46 1	44 83	44 55	44
Total combustibles	46·2	46	46 6	45 8	47·25	47·1	44 75	43 5	42·2	40
Net calorific value of gas at N.T.P.:										
B.T.U./ft.³	170·5	168 7	169 1	166 9	173	172	163	157	153	141·7
Cals./m³	1,520	1,503	1,508	1,187	1,540	1,532	1,454	1,400	1,362	1,261
Yield of gas at N.T.P. per ton dry coal gasified:										
Ft.³	133,700	132,500	132,700	135,000	138,250	134,100	141,450	145,800	147,500	148 000
M³	3,780	3,750	3,760	3,830	3,920	3,810	4,010	4,125	4,180	4,190
Lbs. of steam in air blast per lb. of coal gasified	2	21	325	·454	15	55	80	1 10	1 55	2 48
Lbs. of steam in air blast per lb. of fixed carbon gasified	·34	36	56	·78	·77	94	1 37	1 88	2 65	4 24
Per cent steam decomposed	**100**	**95**	**100**	**76**	**87 4**	**80 0**	**61 4**	**52 0**	**40 0**	**30**
Lbs. of steam decomposed per lb. of coal	**·2**	**·2**	**33**	**·34**	**39**	**44**	**·49**	**57**	**62**	**·75**
True thermal efficiency of gas producer only	76	74 6	74 9	75	80	77 5	77 3	76 6	75 5	69 7
Efficiency ratio	73	71 8	72 2	72 5	77 8	75·0	72 7	70 1	66 5	
Gas outlet temperature ° C.	680	680	780	620						550
Fuel analysis:										
Moisture	About 7 per cent				2 to 6 per cent					
On dry substance: Carbon	77 60				78 41					
Hydrogen	5·35				5 51					
Nitrogen	..				1 39					
Sulphur	1·25				·83					
Oxygen	..				10 03					
Ash	4 60				3 83					
Net heating value: B.T.U./lb	13,110				13,340					
Cals./kg.	..				..					

* This column refers to average Mond gas practice for by-product recovery.

For the depths of fuel employed, the highest thermal efficiency was obtained with a 60° to 65° C. temperature, which corresponds to about ½ lb. of steam being added per lb. of coal gasified.

The "efficiency ratio" figures given by Messrs. Bone and Wheeler are of great value (see p. 47) to the particular works in which the tests were made: they

represent the ratio between the net heat in the gas and the net heat in the coal gasified plus that in the coal required to supply the necessary steam for driving the blower engine and supplying the producer air blast. In the preceding column in Table 14 is stated the *thermal efficiency of the gas producer only*, viz. the ratio between the net heat in the gas and the net heat in the coal gasified only, which, in the author's opinion, will be of more value for comparison with operating results of other gas producers.

One point which should be most carefully noted is that although the percentage of steam decomposed decreases inversely with the blast temperature, yet the total quantity of steam decomposed increases both with the blast temperature and the fuel depth. The author, who has had the opportunity of making tests on gas producers of still deeper fuel beds than those in the Mond Producer (and without superheaters attached), has obtained the results as given in Table 15 when gasifying a similar bituminous fuel to that of Messrs. Bone and Wheeler.

TABLE 15

	Fuel Depth.	
	Nearly 12′ 0″.	Over 14′ 0″.
Gasification rate lbs. per sq. ft. and hour	26	26
Blast temperature	78° C.	75° C.
Gas analysis :		
CO_2	11	8·3
CO	17·5	21·0
H_2	21·5	20·5
CH_4	3·3	4·9
N_2	46·7	45·3
Net heating val. at N.T.P. :		
B.T.U./ft.^{3}	154	178
Cals./m.^{3}	1374	1590
Lbs. of steam used per lb. of coal gasified	1·45	1·0
Percentage of steam decomposed	62	90
Lbs. of steam decomposed per lb. of coal gasified	·90	·90
* Lbs. of steam decomposed per lb. of fixed carbon gasified	1·58	1·58

* It may be considered more correct to refer the quantity of steam decomposed to the quantity of fixed carbon gasified in preference to the fuel quantity.

From these results it will be seen that the researches made by Clement and Adams (referred to on pp. 10 and 17) are clearly confirmed in large scale practice, or in other words, that it is incorrect to lay down a rule as to what steam quantity to be added to the air blast will give the most efficient gasification result, without bearing in mind the time factor that can be allowed for in practice.

Summary

Formation of producer gas in an efficient way will be favoured if the following conditions are observed :—

(1) The highest temperature that is compatible with the avoidance of excessive clinker formation should be maintained in the lower layers of fuel.

(2) The steam quantity in the air blast should be governed by the time factor.

(3) The exposed surface of the particles under gasification should be as large as possible.

(4) The fuel bed temperature should be even across the whole fuel bed.

CHAPTER III

IMPORTANT FACTORS IN GAS PRODUCER PRACTICE

When considering the installation of, or the working results of a producer gas plant we have to concern ourselves with five main factors, all of which have a bearing upon the technical, and, therefore, the commercial, success of the plant in question.

These factors are :—

(*A*) **Rate of gasification.**
(*B*) **Thermal gasification losses.**
(*C*) **Gas quality and quantity.**
(*D*) **Recovery of by-products.**
(*E*) **The composition of the ash.**

It has been considered advisable that each of these points, which of course are all largely governed by the fuel or fuels available for gasification, should be dealt with in detail previous to describing the design and actual operating results of the various types of plant, thus giving the reader a guide to enable him to judge more easily between the merits of the various plants.

In applying the statements made in reference to the various factors, it is obvious that in certain cases one or more of these will be of greater importance to the user than the others, but in dealing with each of these separate points it has been assumed that the particular point dealt with is the one which is of most importance to the investigator.

(*A*) RATE OF GASIFICATION

The rate of burning fuel in a gas producer is generally expressed in weight of fuel gasified per unit of time and cross-sectional area of the generator. The terms used are *lbs. of dry fuel per square foot and hour* or *kilogrammes of dry fuel per square metre and hour*, depending upon which system of measurement is in use.

For the direct combustion of solid fuel, say in boilers, it has in the past been the custom to express the furnace rate in weight of fuel burnt per unit of grate area ; this method is quite satisfactory where natural draught and shallow depth of fuel beds, say 6″, are used ; but so far as gas producers are concerned, it is not unusual to find that the same quantity of fuel can be burnt per hour when using grates of which the area of the open spaces for the air passage of one may be only

a small proportion of that of the other. The author can point to one case of two 10′ diam. producers of which the open grate area of one was one-tenth that of the other, both producers working equally well.

Apart from the fuel quality the main factor affecting the rate of gasification may be said to be the amount and the evenness of the resistance to the passage of gases through the fuel bed, and it is because the actual resistance to the passage of the air blast through the grate is only a fraction of the total resistance in the fuel bed that the grate area (within limits) is of so little consequence.

When dealing with fuels containing varying quantities of moisture, it will be found advisable for reasons of comparison to refer the fuel weight treated to that of the theoretically dry substance of the fuel, which (and not the moisture) is the origin of the producer gas. Hence the producer gas engineer who has to tackle the problem of gasifying fuels of all kinds will refer the gasification rate to the dry and not the moist fuel substance.

The cross-sectional area of the producer is simple to arrive at when the cross-section is the same throughout the whole fuel depth, but, as we shall see in Chapter IV., there are generators in which the fuel body under gasification for various reasons is made to taper either upwards or downwards. For certain fuels, where the main difficulty of gasification is met with in the upper layers, obviously the top area should be used, and in the opposite way for those in which the chief resistance is met with in the lower layers. To strike a mean it is, therefore usual to use the average cross-sectional area throughout the fuel depth as the basis, for the cross-sectional area determination.

If suitably designed, a gas producer is capable of carrying a very large amount of overload for a considerable period, and more than one specific instance can be pointed out where the average gasification rate over the day shift has been more than 60 per cent above the normal average continuous rating of the producer, while, on the other hand, a correspondingly lower load was maintained during the night shift.

Similarly it is not unusual for a suitably designed producer to carry over 100 per cent overload for an hour, or several repeated peak loads at intervals, so long as the average continuous gasification rate over the 24 hours does not alter considerably from the normal rating.

The figures referred to in the following pages are, therefore, expressly stated as the hourly continuous gasification rate over the 24-hour period.

The rate of gasification of a generator is governed by the following main factors, each of which is more or less dependent upon the others :—

I. Fuel.—(*a*) Grading.
(*b*) Fuel nature.
(*c*) Moisture.
(*d*) Ash.

II. Producer design.

III. Load factor.

I. Fuel

(*a*) *Fuel Grading.*—The evenness of or the vari
governs the distribution of the resistance throughout the fuel bed, but large pieces of fuel require a longer time for gasification than small, while the latter, on the other hand, have a tendency to cause a very large resistance. In this way the grading of the fuel will govern to some extent the depth of fuel that is required to get an efficient gasification. The following table represents the relation between the depth of fuel bed required in average practice for some different fuels of varying grading.

Table 16

Fuel.	Grading.	Smallest Economical Depth.
Anthracite	$\frac{3}{8}''$ to $\frac{3}{4}''$ beans	1′ 0″ to 2′ 0″
,, ...	1″ ,, $1\frac{1}{2}''$ nuts	2′ 6″ ,, 3′ 0″
Coke	$\frac{3}{4}''$,, $1\frac{1}{4}''$ cubes	2′ 6″
,, ...	$1\frac{1}{4}''$,, 2″ ,,	3′ 9″
,, ...	2″ ,, 3″ ,,	5′ 10″
Coal	$\frac{1}{2}''$,, $\frac{3}{4}''$ nuts	1′ 10″
,, ...	Run of mine	4′ 10″ to 6′ 6″
Wood	Large blocks	5′ 0″ ,, 7′ 0″
,, ...	Sawdust and shavings	4′ 0″ ,, 5′ 0″

It should here be emphasized that the above figures only represent typical differences, and that in actual practice there are producers at work with as small a depth of fuel as 4″ and others with as big a depth as over 14′ 0″; thus no definite rule for a required fuel depth can be laid down other than that, for small-grained fuel, less depth is required than for large sizes of fuel.

It should further be borne in mind that for fuels of even grading which break up upon heating a greater fuel depth is required, as if dealing with a fuel of uneven grading.

A most important factor when dealing with unevenly graded fuels is the evenness of distribution of the various sized parts of the same; hence the fuel bed depth may be modified in accordance with the degree of perfection of the fuel distribution. Further, since the unevenness of fuel distribution is generally less pronounced on a small producer, the gasification rate may be taken higher on small units.

It will be obvious that as the grading often determines the best depth of fuel to be used, thus for the same rate of gasification it indirectly determines the pressure loss in the fuel bed.

Apart from the indirect effect of the grading upon the gasification rate just mentioned, the grading has also a direct effect in so far as the larger the quantity of fine particles of fuel to be gasified the lower will be the efficient gasification rate,

due to the blowing away of these finer particles. This will be obvious from Table 17, which gives comparative gasification rates.

TABLE 17

Fuel and Grading.		Gasification Rates per hour.	
		Lbs. per sq. ft.	Kg. per sq. m.
Bituminous coal	Washed nuts, 1″ to 2″	26	126
	Rough slack, $1\frac{1}{2}$″ downwards with 20 per cent through $\frac{1}{4}$″	22	106
	Rough slack, $\frac{3}{4}$″ downwards with 50 per cent through $\frac{1}{4}$″	18	87
Coke nuts, $1\frac{1}{2}$″ to $\frac{3}{4}$″		30	145
Coke $\frac{3}{4}$″ ballast, 50 per cent through $\frac{1}{4}$″		15	72

(*b*) *Nature of fuel*, such as type, caking property, degree of free burning, swelling, etc.

Certain fuels seem to desire to be converted into gas, so easy is it to gasify them, as for instance some Derbyshire and South Staffordshire bituminous fuels, or many lignites. Others always require a large amount of attention and care, if a good gasification rate is to be obtained, such as, for instance, some of the bituminous coals from Durham or Wales.

A better rate of gasification will be obtained with a slightly caking coal than with an absolutely non-caking one, especially if the fuel is of a dusty nature, or tends to disintegrate on heating. But if a distinctly caking coal is to be used the gasification rate will fall considerably in spite of all the attention that can be given to poking, and if a reasonable gasification rate is to be maintained with a caking coal it will, generally speaking, be found an advantage to use mechanically stirred producers. The cause of this drop in gasification rate when using strongly caking coals is mainly the unevenness in the resistance of the fuel bed, caused by the fuel caking into large lumps and forming "bridges" of coke which tend to hang up the fuel bed, with the consequent formation of voids in it.

The only means (apart from actual gasification) that the gas producer engineer has for judging the comparative properties of the fuel in respect to the degree of free burning, the caking, and the swelling properties are the rough guides obtained in the laboratory, especially the behaviour of the fuel when heated in the open flame.

The nature of the fuel available for gasification alters with (*a*) the country of origin, (*b*) the district, and (*c*) the various coal seams. But a general idea of what may be anticipated will be obtained from Table 18, which gives comparative figures for gasifying various fuels from different countries and districts. This table assumes static producers in operation using a reasonable amount of hand poking:

TABLE 18

	Gasification Rate of Dry Fuel per hour.	
	Lbs./sq. ft.	Kg./sq. m.
South Staffordshire nuts	26	125
Derbyshire or South Yorkshire nuts	24	116
Durham nuts	14	68
Lanarkshire nuts	24	116
Wales, caking bituminous nuts	14	68
Wales, anthracite nuts	20	97
Pennsylvania, U.S.A. caking nuts	12-15	72
Anthracite, U.S.A.	8-10	44
Lignite, U.S.A. (35 per cent moisture)	30	145
Westphalia, Germany, caking nuts	18	87
Silesia slightly caking nuts	24	116
Brown coal briquettes, German (30 per cent moisture)	30	145
Italian lignite	28	136
South African non-caking nuts	24	116
Peat (40 per cent moisture)	20	97
Wood blocks (35 per cent moisture)	35	170

It will be noticed how low are the gasification rates usual in American practice, even for anthracite. It is of course well known that most American bituminous coals are badly caking, but in addition the ash in American fuels generally has a low fusing point. The rates stated are, however, those which are used by some gas producer builders in U.S.A.

(c) *Moisture Content of Fuel.*—The effect of the moisture content is of course only to be considered for the younger fuels, such as lignite, brown coal, peat, wood, and other substances of vegetable origin.

As will be seen from pp. 18 and 73, when dealing with moist fuels (which we may term as fuels containing more than, say, 15 per cent of moisture) it is essential, from the point of view of the best results in regard to gas quality and thermal efficiency, to utilize the sensible heat of the hot gases generated in the lower part to drive off the moisture from the fuel in the upper layers previous to its passing into the hot zones. The only way to successfully effect this is to provide a bigger fuel depth, which consequently increases the resistance of the fuel bed to the passage of the gases. Further, since the moisture content increases the volume of the gases passing through the producer, a further additional resistance will be set up on this account.

It may be taken as an approximate guide that the gasification rate will alter

inversely with the *total* volume (reduced to N.T.P.) per ton of dry fuel gasified of the crude gas and moisture leaving the generator.

(*d*) *Ash Content of Fuel.*—Except in a few gas generators, which work upon the principle of transforming the ashes of the fuel into a liquid slag (pp. 133-148), the chief aim of the gas producer engineer is to prevent undue clinker formation from the ash. The cause of clinker formation is that the ashes are brought into contact with such hot zones in the generator that they are converted into a more or less plastic or liquid slag, and afterwards come into contact with the cold blast which causes them to solidify to clinker: sometimes the ashes may even form a slag with the sides of the brick-lining and adhere to this. Clinker may cause bridging and formation of hollow spaces in the fuel bed and thus affect the gasification rate, since it reduces the gasification area and causes uneven resistance if it is not continuously broken away by the poker and removed from the generator.

The presence of a certain proportion of iron oxides, lime, magnesia, and alkalies lowers the fusing point of the ash, not because these compounds are fusible in themselves, but because they unite with the silica and alumina in the ash to form fusible compounds.

In the case where fuels of different qualities of ash are mixed together and subjected to gasification, very great difficulties on account of clinker formation have now and then arisen. The reason for this may be attributed to the fact that the one fuel gasifies at a quicker rate than the other, and thus the ash from the former is deposited in the hot zones of the latter.

Again where, due to neglect on the operator's part, the ash level is allowed to rise and the fuel level brought down unevenly so that hot fuel may exist below ash already formed, the most serious of all clinker formations will take place, with the consequent result that bad gas is made, until the gasification rate is decreased, the clinker removed, and the fuel bed made all even again.

As a general rule the clinker should be removed by the poker or slice bar as it is formed; but on the other hand too much poking or breaking up of the fire in the hot zones of the generator may cause even more difficulty or excessive clinker formation than if the ash is permitted to stay without upsetting or stirring, in the zone where it belongs, viz. near the grate.

The above are only a few examples from actual practice showing how ash fusing and consequent clinker formation will affect the gasification rate.

With the object of minimising clinker formation in the generator there are three main points to consider, (1) to adjust the hottest zone so that it does not exist exactly where all the fuel is turned into ash, or (2) to adjust the quantity of steam in relation to the quantity of air blast so that the temperature of the hot zone is caused to be below that of the melting or softening temperature of the ash, or (3) to reduce the gasification rate of the generator, which brings about the same ultimate result as (2).

By slow gasification of the fuel (not gasification rate) it is possible to achieve the object of item (1) above, but so little work has been accomplished in this respect that this line of research is not yet sufficiently advanced to lay down any rules.

As regards item (2) it is obvious that if the operator has a free hand in regard to the gas quality to be made (that is the content of hydrogen in the gas) it is always possible for him to reduce the clinker formation, but if too much steam is introduced there are the two disadvantages to consider, (*a*) that the coal may not be completely burnt (especially with low fuel depths), and (*b*) that the best thermal efficiency may not be obtained. One specific advantage obtained by the introduction of steam is that the clinker becomes more spongy and soft, and thus easier to remove, than without steam or with the addition of only a small steam quantity.

As regards item (3) this is the only way out of the difficulty in case a definite gas composition is required, and excessive clinker formation cannot be counterbalanced by the manner of operation mentioned under item (2).

No work has yet been done to determine the gasification rate of fuels containing the same ash but in different quantities, because it is hardly possible to obtain such conditions for research in practice, and in the absence of work of this kind we cannot lay down a rule whereby the gasification rate may be said to be dependent upon the quantity of ash in the fuel.

In all three cases, however, it is obvious that the main governing factor is that of the fusing temperature of the ash, and as will be seen from the statements in this respect (pp. 117-127) very much research work remains to be done.

II. Effect of Producer Design

Reference must here be made to Chapter IV., on generator types and designs, from which it will be seen that very much higher gasification rates have been obtained in actual practice than those formerly referred to: thus for complete mechanical producers it is not impossible to obtain a 50 per cent or even higher increase in the gasification rates of some of the fuels already mentioned.

Quite apart from these directly obvious means of increasing the rate of gasification, there are such points that the rate of gasification will alter with the size of the generator and especially with the fuel depth.

III. Load Factor

As mentioned elsewhere, gas producers can be designed so as to respond quickly to overload by providing a deep fuel bed.

The figures of hourly gas production given in the table on following page were taken from such a gas producer burning a bituminous slack coal.[1]

As the normal rating of this producer was 20 to 22 lbs. of coal per square foot and hour, it will be realized that the maximum load was 130 per cent above the normal, and that during seven hours continuously the producer carried over 100 per cent overload. The thermal gasification efficiency was, however, decreased at the higher loads, since the loss due to fuel lifted away by the gas current at 100 per cent overload became considerable, it being several per cent on the fuel gasified.

[1] Rambush, West of Scotland Iron and Steel Inst., Session 1922-1923.

Time.	Cub. ft. Gas per hour at N.T.P.	Lbs. of Coal gasified per sq. ft. and hour.
12 midnight	98,000	17·2
1 A.M.	88,100	15·5
2 ,,	88,100	15·5
3 ,,	111,500	19·6
4 ,,	109,300	19·2
5 ,,	109,300	19·2
6 ,,	122,700	21·5
7 ,,	147,000	25·8
8 ,,	158,200	27·8
9 ,,	253,900	44·5
10 ,,	263,600	46·2
11 ,,	266,200	46·8
12 noon	275,300	48·2
1 P.M.	253,300	44·4
2 ,,	233,600	39·2
3 ,,	250,900	44·0
4 ,,	185,800	32·6
5 ,,	164,000	28·8
6 ,,	171,300	30·4
7 ,,	75,200	13·2
8 ,,	62,000	10·9
9 ,,	80,500	14·4
10 ,,	128,400	22·5
11 ,,	96,900	17·0

The above is only a typical example of the capacity of a deep fuel bed producer for quickly responding to overloads. The cause for this property of the deep fuel bed is not only the larger fuel volume which acts as a heat storage, but also the large time factor which can be presented for the gas reactions even during overload periods. What actually takes place is that the depth of the CO_2 and steam decomposition zones have been given "room for expansion" without affecting to any considerable degree the temperature existing in the upper and lower layers of the fuel bed.

Summary

It will have been obvious from the above that the economical gasification rate is dependent upon so many factors that the most careful judgement must be exerted when determining the rate that may be expected from a certain fuel when used in a certain generator.

The curves shown in figs. 11 and 12 are drawn with the object of facilitating

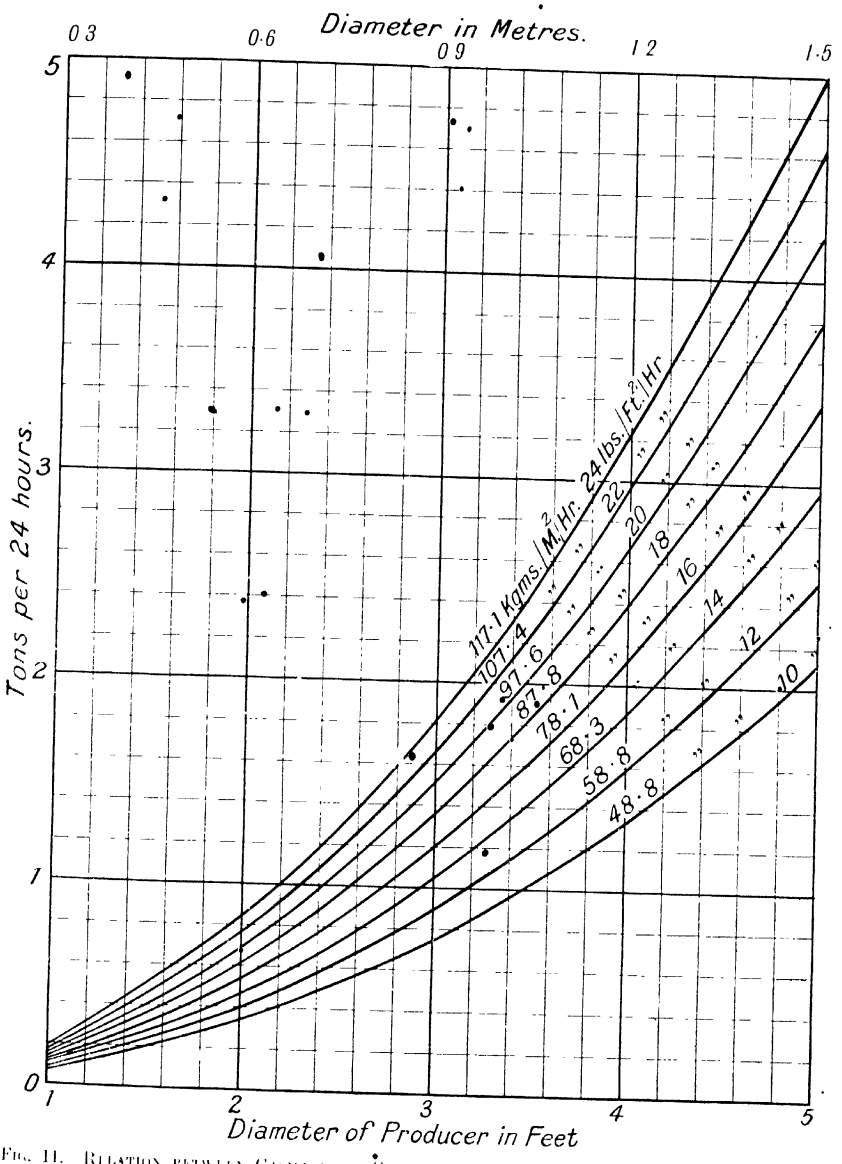

Fig. 11. Relation between Gasification Capacity and Diameter of Large Gas Producers.

the choice of the diameter of producer required when the throughput per 24 hours in tons is given and the gasification rate is decided upon. The one set of curves (fig. 11) gives the internal diameter of generators up to 5 feet and gasification rate

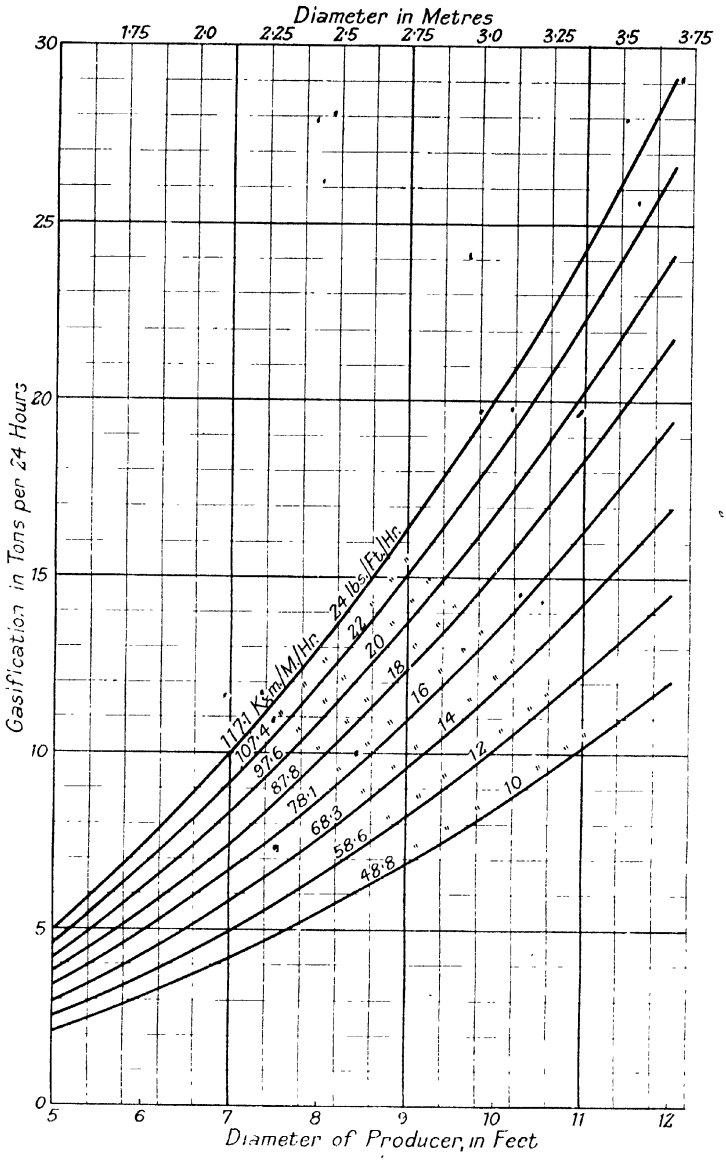

FIG. 12.—RELATION BETWEEN GASIFICATION CAPACITY AND DIAMETER OF SMALL GAS PRODUCERS.

in lbs. per square foot per hour, while the other set (fig. 12) refers to diameters between 5 and 12 feet.

(*B*) THERMAL GASIFICATION LOSSES[1]

One of the ways of comparing the economy of a plant or machine is to state its efficiency, whereby we define the ratio between what we supply to the plant or machine and what we receive from it. Similarly we speak about the thermal efficiency of a gas producer; but if we peruse the various papers and investigations in regard to determining the gas producer efficiency, it will be clear that concise definition is seldom made as to what is meant to be included under the heading *Supplies* (such as coal, power, and steam), to the plant, or *Receipts* from the plant (such as gas, and in some cases tar also).

It is obviously essential for the individual user of producer gas to know how much fuel is involved in supplying (1) gas for the works, (2) steam for the gas producer, and (3) steam or electric current for the auxiliary plant of the producer. Against this heat expenditure in fuel must be set the heat contained in the gas leaving the plant and (in such cases where tar oils are produced from the fuel and utilized in the works) also the heat contained in the tar recovered.

Although such knowledge is most essential to any individual works, it will be realized that to determine the *over-all* efficiency in this way will involve variable factors, such as efficiency of steam and power generating plants, and whether or no tar oils can be made use of, etc. In other words, the *over-all* thermal efficiency of one and the same gas producer may alter considerably, depending upon the particular works in which it is installed.

To enable gas producer plants to be compared on an equal basis, it is therefore customary—and also justifiable—to speak about the *plain gas producer efficiency*, by which is meant the ratio between the *net heating value and volume at N.T.P. of the gas evolved per unit weight of theoretically dry fuel gasified in the producer, and the net*[2] *heating value of the said unit weight of theoretically dry fuel.*

Since the heating value and composition of the dry substance remains unaltered for each individual fuel, whatever be the season of the year, it will be found advantageous to base all thermal efficiency figures on the dry fuel, hence the reason for adopting the T.D. substance as the standard fuel weight in the above definition.

We have thus seen that there are two main methods in which we may define the thermal efficiency of a gas producer; but it should be emphasized here that unless in the following we specifically state the thermal efficiency to be the over all, we refer to the plain gas producer efficiency.

The main points having a bearing upon the thermal efficiency or the thermal losses during the gasification process are:—

1. **Moisture content in the fuel.**
2. **Tar content in the fuel.**
3. **Grading of fuel.**

[1] The content of pp. 47–70 was in part the subject of a paper read by the author before the Society of Chemical Industry, published June 30, 1921.

[2] By the net heating value is meant the gross heating value as determined by calorimeter, less the latent heat of the steam formed by burning *all* the hydrogen in the fuel.

4. **Soot formation.**
5. **Ash content of fuel.**
6. **The radiation, convection, and conduction heat losses from the producer proper to the surroundings.**
7. **Gas leakage losses.**
8. **Losses in washing liquors.**
9. **Nitrogen and sulphur content in fuel.**
10. **The temperature of and sensible heat contained in the hot gas leaving the producer.**

In the following we shall not only study the causes for the individual thermal losses, but also their relative magnitude and bearing upon the final result.

1. Effect of Moisture Content in Fuel

Most good-class bituminous fuels have such a low moisture content that the evaporation of this amount of moisture has very little effect upon the thermal efficiency; but for such high-moisture fuel as wet coke breeze, and especially vegetable materials such as wood or some peats or lignites, the moisture content will have a very great effect. This may be demonstrated by the example of the gasification of a peat having a moisture content of 50 per cent and a net heating value of 4000 cals. per kg. (7200 B.T.U. per lb.) of theoretically dry substance. For each kg. of dry substance of such peat introduced into the producer 1 kg. of water would have to be evaporated and heated to the gas outlet temperature of, say, 150° C.

Supposing now the peat, instead of being introduced in a wet state, were introduced in a moisture-free state into a producer, and the gas volume (at N.T.P.) be 2·5 cub. m. per kg., and the average specific heat of the gas evolved be approximately 0·3 cal. per cub. m., also that the gas outlet temperature be about 500° C., then the sensible heat in or the thermal capacity of the gas from 1 kg. of dry peat between 150° and 500° C. would be $2{\cdot}5 \times 0{\cdot}3 \times (500 - 150) = 262$ cals.

Now when the 1 kg. of dry fuel is gasified with 1 kg. of water in addition, extra heat will be required to raise this water from, say, 15° to 100° C., evaporate it, and superheat the steam to the gas outlet temperature of 150° C. This extra heat is 650 cals., while the sensible heat in the hot gases from 1 kg. dry material is only 262 cals., thus leaving a deficit of 388 cals., which must be supplied by *burning* part of the fuel itself (roughly 10 per cent) in the lower part of the producer, with a consequent reduction in the heating value of the gas and the thermal efficiency. If the fuel bed is not deep enough to enable the sensible heat of the gas generated in the lower part to be utilized for the evaporation of the moisture, the thermal loss will of course be still higher than the mentioned 10 per cent.[1]

It is obvious that before being able to estimate accurately the effect of evaporating the moisture upon the efficiency it would be necessary to determine the difference in the gas outlet temperatures when using a theoretically dry and a moist fuel.

[1] The exothermal heat of distillation of peat and other fuels of high oxygen content (see pp. 310 and 462) cause less fuel to be burnt for evaporation of moisture, but the magnitude of the thermal loss remains unaltered.

Such determination may be liable to considerable error; it is therefore simpler to assume that the heat required for heating the moisture from, say, 15° to 100° C. and evaporating it be taken as having to be supplied from the heating value of the dry fuel only, while the heat required for superheating the steam thus raised is assumed to come from the sensible heat of the gas. Under this assumption the decrease in thermal efficiency obtainable in practice due to moisture will always be slightly less than the figure estimated in this way.

TABLE 19

HEAT LOSS DUE TO MOISTURE IN PER CENT ON NET HEATING VALUE OF DRY FUEL

Per cent Moisture Content in Raw Fuel.	Net Heating Value of theoretically dry Fuel.				
	8,000 14,400	7,000 12,600	6,000 10,800	5,000 9,000	4,000 Cals./kg. 7,200 B.T.U./lb.
10	0·86	0·98	1·11	1·37	1·7
20	1·95	2·23	2·6	3·12	3·9
30	3·35	3·83	4·17	5·36	6·7
40	5·21	5·95	6·95	8·35	10·4
50	7·81	8·93	10·4	12·5	15·6

Table 19 gives a series of figures for the heat losses due to moisture content calculated in this way when gasifying fuels of varying heating value and different moisture content. Further, fig. 13 contains a series of curves to show the same result graphically and to enable any intermediate stages to be easily determined.

2. EFFECT OF TAR CONTENT IN FUEL

A fuel for use in gas producers should generally be examined in a special way because the ordinary method of determining the volatile matter in bulk without distinguishing between the gas, liquor, and tar-forming constituents gives no guide to a producer gas user, consuming cold gas. So far as concerns gas-making (cold gas) purely and simply, the liquor and tar-making constituents in a fuel are of no use and the heat contained in either must be counted as a loss.

A method of analysis for determining the tar value of a fuel (*i.e.* that quantity of the condensate which does not dissolve in the liquor of condensation) is referred to on p. 460; suffice it to say here that the quantity of tar obtained in practice on a gas producer is less and of higher specific gravity than that obtained by the laboratory test. A tar yield in practice of 80 per cent of the laboratory yield is quite a usual figure where special steps have not been taken to destroy the tar. The tar production may vary from practically nothing (when gasifying coke or

anthracite) to 10 per cent or 15 per cent by weight when gasifying fuels high in tar-yielding matter, while its heating value, although always higher than that of the

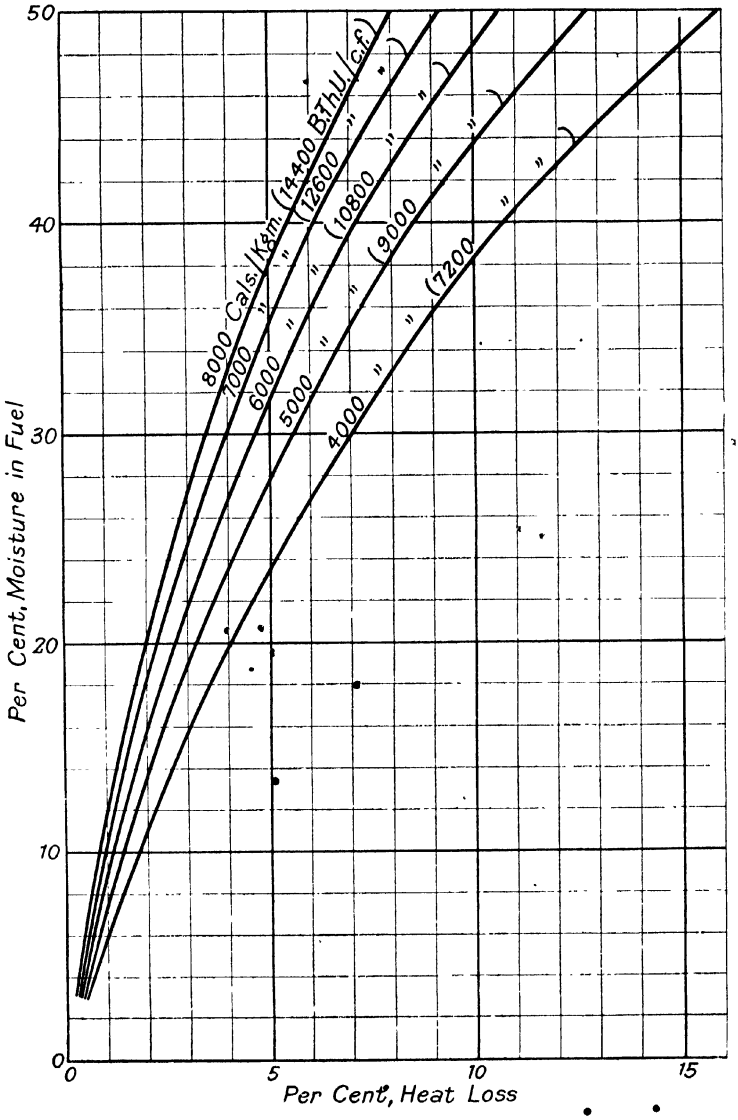

Fig. 13. - Effect of Moisture Content upon Thermal Gasification Loss.

solid fuel, generally does not vary more than between 14,500 and 16,000 B.T.U. net per lb. dry tar.

As the heat loss due to tar formation is the product of tar quantity and heating value, it is obvious that for fuels of low heating and high tar-yielding power this gasification "loss" may be of great magnitude. For most English bituminous coals, however, the heat loss due to tar represents generally from 6 to 10 per cent of that of the dry coal.

If no actual results of the treatment of a particular fuel in a certain gas producer are available and the thermal loss caused by tar formation is to be predicted, it is best to assume that the practical tar yield will be like the tar value obtained in the laboratory, thereby ensuring that the prediction of the thermal loss will be on the safe side.

As the heat loss due to tar formation will vary with the tar value and the heating value of the fuel, Table 20 and the curves on fig. 14 have been worked out to cover various conditions on the assumption that the heating value of the dry tar 15,300 B.T.U. net per dry lb. (8500 cals./kg.).

TABLE 20

HEAT LOSS DUE TO TAR IN PER CENT ON NET HEATING VALUE OF DRY FUEL

Tar Value.	Net Heating Value of theoretically dry Fuel				
Per cent Tar Yield in Laboratory Test.	8,000 14,400	7,000 12,600	6,000 10,800	5,000 9,000	4,000 Cals./kg. 7,200 B.T.U./lb.
1	1·06	1·2	1·42	1·7	2·12
2	2·12	2·43	2·83	3·4	4·25
3	3·19	3·64	4·25	5·1	6·38
4	4·25	4·86	5·67	6·8	8·5
5	5·31	6·07	7·08	8·5	10·6
6	6·38	7·28	8·5	10·2	12·75
7	7·44	8·5	9·9	11·9	14·90
8	8·5	9·72	11·35	13·6	17·0
9	9·56	10·93	12·75	15·3	19·12
10	10·62	12·15	14·2	17·0	21·25
11	11·69	13·35	15·6	18·7	23·4
12	12·75	14·6	17·0	20·4	25·5
13	13·83	15·8	18·4	22·1	27·6
14	14·9	17·0	19·85	23·8	29·8
15	15·95	18·2	21·3	25·5	31·9

3. EFFECT OF FUEL GRADING

The evenness or variation in size of the fuel charged has a most important effect upon the gasification, because not only does the thermal loss—due to the

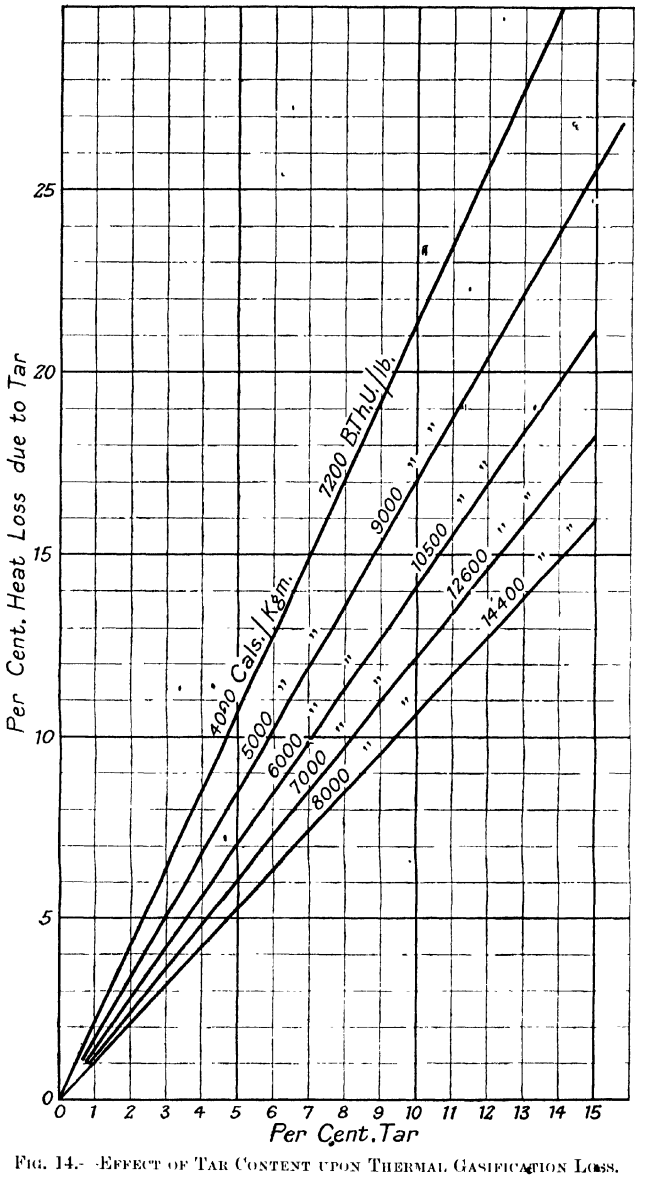

FIG. 14.—EFFECT OF TAR CONTENT UPON THERMAL GASIFICATION LOSS.

carrying away of dust—increase with the percentage of smalls in the fuel, but indirectly the grading will affect both the gas quality and gasification rate and thus also the thermal loss.

With fuels containing an excessive quantity of fines the dust loss may be serious unless preventive provision is made in the design. With the same grading of the fuel the loss is obviously a function of the gas velocity in the outlet pipe or upper fuel layers. Since the dust-carrying capacity of a gas alters with the sixth power of the velocity, it is obvious that the best means to prevent thermal loss on this account is to have the crude gas as it leaves the producer as cold as practicable; indeed it is a well-known and established fact that there is very little dust carried away from low temperature gas producers.

Another means of decreasing the thermal loss due to dust, although not so effective, is to provide a large empty space above the fuel bed in which the dust may partially settle out instead of being carried away by the momentum of the gas current.

It should be borne in mind that certain fuels (in particular some lignites) break up and crumble shortly after introduction into the producer, so that a larger dust loss will be obtained in practice than might be expected from the grading test carried out on the fuel in its natural state.

Other aspects to be considered, quite apart from the gas producer process in itself, are the losses such as may be incurred (due to wind) by storing a slack fuel containing a large quantity of fine in the open or handling it in an unprotected fuel-conveying plant. Gas producer users might be well advised to have their fuel (handling) and storage plant protected against atmospheric effects, not only from the point of view of dust loss, but also on account of the moisture added to the fuel on rainy days.

4. Effect of Soot Formation

Soot formation varies with the type of fuel used, but it is caused by the tarry matters evolved from the coal being exposed to such a high temperature inside the producer that they are decomposed into gas and carbon (soot). Soot formation is practically absent in some by-product producers where the only decomposition of tar which takes place is into gas and oils of a higher boiling-point; but even with hot gas producers soot formation can be reduced considerably by feeding or distributing the fuel evenly over the top of the fuel bed, especially if the latter is not too shallow.

The thermal loss due to dust and soot formation is one which may vary from practically nothing to 7 per cent or more on the weight of fuel supplied, and since the heating value of the dust and soot is mostly about the same as that of the fuel gasified, the percentage weight loss of dust and soot will directly represent the thermal loss in per cent. Table 21 contains some dust and soot loss figures obtained in large scale practice.

TABLE 21

DUST AND SOOT LOSS

Fuel used	Per cent Loss	Rate of Gasification.	Gas Temperature	Type of Plant
Slack, 15 per cent through $\frac{1}{4}''$	1	24 lbs. per sq. ft. per hr.	300° C.	Low temperature
Nuts	Nil	26 ,,	300° C.	,,
Slack, 16 per cent through $\frac{1}{8}''$	7	20 ,,	600° C.	By-product
Small nuts	4	26 ,,	550° C.	,,
Caking nuts	3	28 ,,	750° C.	Hot gas

5. EFFECT OF ASH

Four factors, in connection with the thermal losses of a gas producer due to the ash removed from the producer, are :—

(*a*) The constituents of the ash in the fuel.
(*b*) The quantity of ash in the fuel.
(*c*) The amount of unburnt fuel in the producer ashes.
(*d*) The sensible heat contained in the hot producer ashes.

(*a*) The matter of the composition of the ash in the fuel and its fusibility is referred to elsewhere (p. 117), but in so far as the quantity of air and steam to be added to the producer (on the one hand for oxidizing the ash completely, and on the other hand for avoiding undue clinker formation) is governed by the ash constituents, in so far will these affect the thermal loss.

(*b*) Obviously the quantity of ash in the fuel affects the losses mentioned under (*c*) and (*d*). Since it is more difficult to maintain the carbon content in the ashes low the higher the ash content in the fuel, and since the heating value of the fuel decreases with the ash content, it is plain that the proportion of the heat lost in the ashes will be of the cumulative order in regard to the ash content in the fuel.

(*c*) The quantity of dry producer ash removed from the producer is always larger than the quantity of ash in the fuel by the amount of unburnt fuel (practically all carbon) removed with the ash. With a given fuel this carbon content is mainly dependent upon the skill of the operator and the rate of gasification. With a given producer (apart from human causes), the carbon content in the ashes increases not only if excessive clinker formation takes place, but also if clinker formation is lessened by adding steam to such an extent that "the air blast becomes too wet" to properly burn the fuel near the ash zone.

Since operating conditions vary so considerably it is difficult to lay down any definite and general rule about the amount of carbon that is permissible in the producer ash. It must be stated, however, that for suitable bituminous producer

coals containing up to 15 per cent ash, it should be possible with reasonable care on the operator's part to maintain the carbon content in the ashes removed at about 10 per cent. With a fuel of a heating value of 12,000 B.T.U. net per lb., the thermal loss that is thus incurred will be 1·33 per cent with 10 per cent ash in the fuel and 10 per cent carbon in the ashes, while with 15 per cent ash in fuel and 10 per cent carbon in the ashes it will be 2 per cent. In other words, the loss due to unburnt fuel in the ash is not very excessive for most bituminous fuels, and we must therefore generally classify the ash loss under the heading of smaller thermal losses.

Table 22 below gives the results of a few calculations of heat losses in ash for various conditions; it will be seen at a glance that it is a calculation involving four variables first involving the calculation of the weight of carbon lost in accordance with the following formula:—

$$X = \frac{a \times c}{100 - c},$$

where X = the carbon lost in per cent weight of fuel used,
a = ash content of the fuel,
c = carbon content in the ash;

and then the calculation of the ratio between heat contained in this carbon and that contained in the fuel.

TABLE 22

HEAT LOSS DUE TO CARBON IN ASHES

	Carbon Content of Ashes per cent.	X of Carbon lost per 100 lbs. of Fuel gasified. *i.e.* per cent Carbon Loss.	Thermal Loss per cent on Heating Value.
Fuel 10 per cent ash	10	1·1	1·33
12,000 B.T.U./lb.	15	1·8	2·17
Or 6700 cals./kg.	20	2·5	3·02
Fuel 20 per cent ash	12	2·7	3·66
10,700 B.T.U./lb.	18	4·4	5·96
5950 cals./kg.	25	6·7	9·08
Fuel 30 per cent ash	15	5·3	8·08
9500 B.T.U. lb.	22	8·4	12·82
5280 cals./kg.	30	12·9	19·70

To enable a quick estimation of the heat loss due to unburnt carbon in the ashes fig. 15 has been prepared, the curves on which cover the conditions met with

in general practice. When using these curves the carbon content in the ashes should be used as the starting mark, then the ordinate should be followed to its

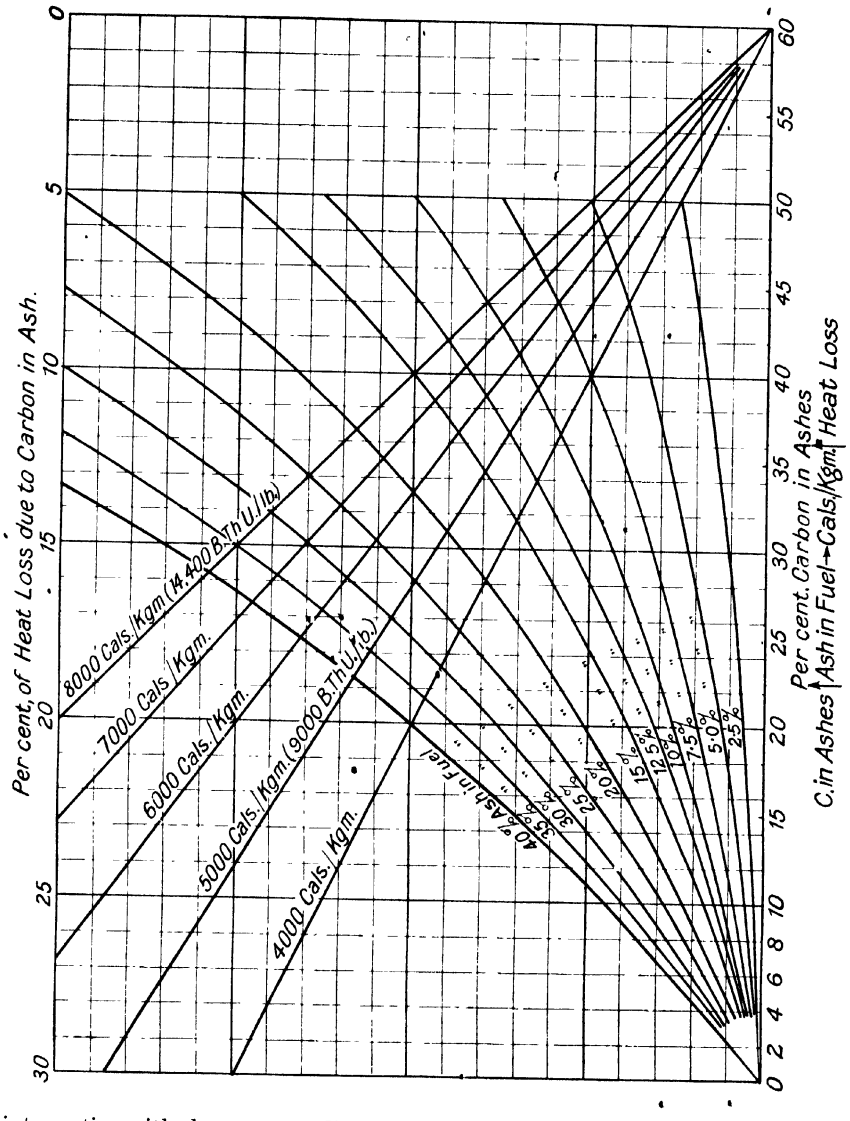

FIG. 15.—EFFECT OF ASH CONTENT UPON THERMAL GASIFICATION LOSS.

intersection with the corresponding ash content in fuel curve: from this point follow the abscissae until intersecting with heating value in the fuel curves and thence by the ordinate to the per cent heat loss.

(*d*) The sensible heat contained in the hot ashes leaving the producer varies with the ash content of the fuel, but is not of any consequence in a water-luted producer, because the heat is utilized practically completely to raise steam (by diffusion) and to preheat the air blast, but even with a "dry bottom" producer this heat loss is very small. Assuming the temperature of the ashes leaving the producer to be 100° C. and 400° C. for wet and dry bottom producers respectively, and assuming that 20 per cent of the fuel is removed as ashes (sp. heat 0·3), then the total sensible heat contained in the ashes per kg. of fuel will be 6 cals. and 24 cals. respectively. With a heating value of fuel of 6700 cals. per kg. these heat contents correspond to 0·09 per cent and 0·36 per cent respectively.

6. Effect of Heat Radiation, Convection, and Conduction

Thermal losses caused by radiation and convection, etc., can only be defined as that amount of heat which travels from the incandescent fuel bed inside the producer through the brick-lining and passes from the outside of the steel casing of the producer into the atmosphere. Radiation, etc., losses from hot gas piping and other parts are accounted for later under the heading of losses due to sensible heat contained in hot gases.

It is not at all unusual to find many past investigators of the thermal balance of gas producers stating radiation, etc., losses of a very high order. It should here be stated, however, that in most of these cases the omnibus item termed "radiation, convection, etc.," was made responsible for leakages, unknown losses, and the avoidable and unavoidable errors of experiment, and for this reason all such figures should be accepted with caution, if a true idea as to the magnitude of the actual radiation and convection losses is desired. As a matter of fact the radiation, convection, and conduction losses from a producer, which of course vary with the atmospheric conditions, are generally of the order of 1 to 2 per cent of the heat of the fuel gasified.

It is obvious that if the skin temperature of the producer casing is determined, one is then able to judge the approximate order of the heat given off to the surroundings under average atmospheric conditions. On fig. 16 dimensioned diagrams of three gas generators of various types are shown, each of which contains the skin temperatures at various heights such as have been measured under actual working conditions. This information enables us to calculate, on the basis of the work of Stephan and Bolzmann, the radiation and convection losses that should take place with, say, a surrounding atmospheric temperature of 15° C.

Stephan and Bolzmann's formula is

$$L = N(T_p^4 - T_a^4)10^{-8} + M[t_p - t_a]^{1\cdot 23},$$

where L = Loss due to air convection currents and radiation in cals./sq. m. exposed surface and hour.

T_p and T_a = The absolute temperature in ° C. of producer casing and surrounding air respectively.

t_p and t_a = The actual temperature in ° C. of producer casing and surrounding air respectively.

N = Radiation factor = 2·8 for steel plates.

M = Convection factor = 3·5 for average atmospheric conditions.

Table 23 gives a summary of the calculated radiation and convection losses of the producers shown in fig. 16, for 15° C. atmospheric temperature.

TABLE 23

RADIATION AND CONVECTION LOSSES

Producer Type.	A	B.	C.
Exposed area, sq. m.	37	46·5	80·5
Approximate mean skin temperature ° C.	93	97	80
Calculated radiation and convection losses in cals. per sq. m. and hour = L	1,056	1,123	835
Total heat loss cals./hour	39,070	52,220	67,217
Coal gasified per hour kg.	300	1,000	800
Radiation loss in per cent on heat in coal gasified (net heating value about 6700 cals./kg.)	1·91	0·78	1·25

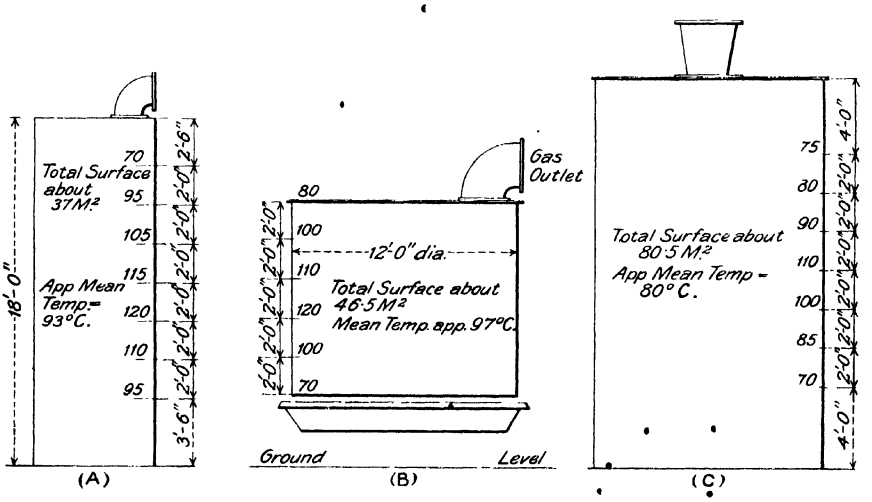

FIG. 16.—GAS PRODUCER CASINGS SHOWING SKIN TEMPERATURE.

From an examination of Table 23 it will be realized that although the radiation losses are of a reasonably small order, yet they differ with the size of producer in so far as the area exposed for radiation per unit of coal gasified is larger the smaller the diameter of the gas producer. Further, since the producer skin temperatures within limits do not alter considerably with the rate of gasification, it is also obvious that the radiation loss in per cent on fuel gasified increases inversely with the rate of gasification.

Before leaving the subject of heat losses to the surroundings, it would be as well to mention in the case of gas producers, where a water jacket is provided (say for the purpose of preventing clinker growth on the brick-lining), that the heat removed by the water may be large; in fact the author can point to cases where the hot jacket water from a producer contained 8·5 per cent of the heat in the fuel gasified. Although it is possible to maintain this heat loss lower, yet unless means are provided to recover the heat in the jacket water, the thermal loss that may be incurred on this score is of considerable magnitude and should be taken due care of in a thermal balance calculation.

7. Effect of Gas Leakages

Losses due to leakages may be subdivided into—

(*a*) Periodical loss due to poking and cleaning.
(*b*) Continuous loss due to leaky joints.

The amount of gas lost in these two ways varies with the gas pressure existing in the plant.

As an instance of how the pressure affects the leakage loss, the gas volumes at N.T.P. from a 2″ diam. opening have been calculated for a producer gas having a temperature of 500° C. and found to be 3000 cubic feet per hour for a gas pressure of 2″ and 10,000 cubic feet per hour for a gas pressure of 20″.

(*a*) It was not uncommon on the earlier designs of pressure gas plants to find gas pressures leaving the generator of 10″ to 15″, but for average pressure producer practice of to-day it must be said that about 2″ to 4″ is an ordinary pressure, nevertheless with some coals the producer men are often required to poke the fire for at least one-tenth of the working time, not to speak of the periods when dust collectors and gas mains are blown out and poked clean. In such cases it is not uncommon to find the thermal loss due to gas lost by poking and cleaning 0·5 per cent of the fuel gasified.

(*b*) Leaky joints such as are caused by faulty manufacture, erection, or vibration (due to wind, machinery, etc.) exist on the best plants. Even on such carefully laid pipe lines as for town gas supply it has been proved that leakages may be more than 1 per cent of the gas supplied. Of course, the loss will depend on the surface of the plant exposed, and is obviously largest on cold gas producer plants, and is the larger the cleaner the gas.

It is obvious that the plant which works with the lowest possible pressure

difference between the gas and the atmosphere will have the smallest leakage loss; thus if the whole plant were under suction this loss would disappear. It is very difficult to make a general statement as to the quantity of gas lost by leakages, but there are few pressure plants on which these losses under average working conditions are less than 0·5 per cent for hot gas producers and 1 per cent on cold gas producers.

8. Effect of Gas Cleaning and Cooling

The losses on this account may be divided into two sub-headings, viz. (*a*) substances mechanically carried away by, and (*b*) matters dissolved in, the washing liquid.

(*a*) An appreciable quantity of gas is carried away mechanically with the washing liquors, leaving the cooling, cleaning, and other plant or gas treating machinery thus escaping to the atmosphere. The existence of this loss can be observed on any gas-washing plant by watching the behaviour of the washing liquid leaving a tower. If an inverted bottle filled with water is placed below the water level and close to the water outlet pipe from the washer, gas will soon rise in the bottle, replacing the liquid. From a test made by the author on one of the early types of combined air saturator and gas cooler on a Lymn plant (by estimating the CO_2 content in the air entering and leaving), the gas loss due to this cause was found to be over 0·5 per cent.

(*b*) All gases dissolve in water, and also some of the tar oil compounds are soluble, particularly the tar acids or phenols. The loss occurring in this respect, as far as the gaseous substances are concerned, is not very large and cannot be avoided; and by carefully controlling the waste liquors of the plant and the cooling water system, the phenols, etc., can be retained in the plant as a by-product.

Summarizing the matter of the thermal losses due to gas or liquors carried away by the washing liquids, even with a well-designed plant, this should not be considered less than 1 per cent of the heating value of the fuel treated.

9. Effect of Formation of Ammonia and Sulphuretted Hydrogen

The gas-forming constituents of a fuel other than carbon, hydrogen, and oxygen that may occur to any considerable extent are nitrogen and sulphur. These will be present in the gas in the shape of the hydrides, ammonia and hydrogen sulphide, which will contain some of the potential heat of the fuel. If these gases are removed from the producer gas, say, in a by-product recovery plant, obviously a heat loss will take place which increases with the content of the nitrogen or sulphur and decreases the higher the heating value of the fuel.

In a by-product recovery gas producer the average yield of nitrogen as ammonia may be taken as 60 per cent, and the yield of sulphur as sulphuretted hydrogen as 80 per cent, and since the net heating value of NH_3 = 3248 cals./cub. m. and H_2S = 5513 cals./cub. m., the heat loss due to

Complete removal of NH_3 will be 31 cals. per kg. fuel containing 1 per cent nitrogen.
" " H_2S " 32 " " " 1 " sulphur.

10. Effect of Gas Outlet Temperature and Sensible Heat Loss

On most producers the heat contained in the hot gas is the source of the largest thermal loss, as it may amount to as much as 25 per cent of the heat of the fuel, and on most of the existing gas producer plants averages about 15 per cent under good working conditions.

The hot crude gas as it leaves the generator not only contains the gaseous constituents such as we determine by an ordinary gas analysis, but also moisture, tar, dust, and soot. The sensible heat contained in the latter three items is generally very insignificant in comparison with that in the gas and the moisture, while the heat loss due to the content of combustible matter in these products has been previously dealt with under their respective sub-headings.

The moisture content in the gas originates from three sources: (*a*) undecomposed steam from the steam in the air blast, (*b*) moisture in fuel, and (*c*) water of decomposition of fuel.

(*a*) The amount of undecomposed steam remaining in the hot crude gas leaving the producer depends upon many factors, such as depth of fuel bed, load factor, and quantity of steam introduced into the producer with the air blast. This quantity may vary from less than 0·1 lb. per lb. of coal to nearly 2 lbs. per lb. of coal gasified (see pp. 34-35).

From the point of view of the thermal efficiency of the gas producer only (quite apart from the heat required to raise steam), it is obvious that the more undecomposed steam that remains in the crude gas the larger will be the thermal loss due to the sensible heat of such undecomposed steam, which leaves at the same temperature as the gas. This rule holds good in spite of the fact that the gas temperature will generally be lower, the higher the percentage of undecomposed steam.

(*b*) and (*c*) The moisture content in the hot gas due to moisture in fuel and water of decomposition can be judged from the laboratory examination of the fuel, it being practically certain that none of such "moisture" in the fuel will be decomposed by the reaction with the carbon in an up-draught type of gas producer.

The latent heat of the steam introduced with the air blast into the producer, and of the moisture content of the fuel, are best accounted for separately, so that under the present heading we need only concern ourselves with the sensible heat in the water vapour contained in the hot gas leaving the producer. So far as the sensible heat contained in the hot gas itself is concerned, this is easily calculated when the temperature, the analysis of the gas, and hence its specific heat are given. In Table 21 are stated the mean specific heats, at constant pressure, for various gases per unit volume at N.T.P. This table, which represents a summary of not only Messrs. Holborn and Henning's well-known work but also the results obtained by later workers, seems to be the most reliable yet published.[1]

[1] Neumann, *Z f. a. C.*, May 13, 1919.

TABLE 24

MEAN SPECIFIC HEAT AT CONSTANT PRESSURE PER CUB. M. GAS AT N.T.P. BETWEEN 0° AND T° C.

Temperature T° C.	Neumann.			Langen.
	CO_2 and SO_2	H_2O	O_2 . N_2 . H_2 . Air and CO	Calculated CH_4
0	0·397	0·372	0·312	·341
100	0·410	0·373	0·314	..
200	0·426	0·375	0·316	·410
300	0·442	0·376	0·318	..
400	0·456	0·378	0·320	·476
500	0·467	0·380	0·322	..
600	0·477	0·383	0·324	·542
700	0·487	0·385	0·326	..
800	0·497	0·389	0·328	·608
900	0·505	0·394	0·330	..
1000	0·511	0·398	0·332	·674

On the basis of Table 24 the curves in fig. 17 have been worked out, thus enabling the total sensible heat (thermal capacity) per cub. m. (N.T.P.) of each of the various gases to be read off directly against the temperature. To simplify the matter of calculating the sensible heat loss still further, the set of curves in fig. 18 has been prepared, by the aid of which, for any given gas temperature, not only the thermal capacity per cub. m. of producer gas of any analysis can be determined, but also the sensible heat loss in its accompanying moisture.

By following the gas temperature ordinates in upward direction one obtains the sensible heat contained per cub. m. (N.T.P.) of dry gas, while by following the temperature ordinates in downward direction the intersection with the moisture content lines (grammes H_2O per cub. m.) gives the sensible heat contained in the water vapour per cub. m. dry gas (N.T.P.).

The reason that the determination of the sensible heat loss can be thus simplified is that the main constituents of producer gas are diatomic gases all having the same specific heat, while the methane content is generally less than the carbon dioxide content and not of very much greater specific heat, and thus only a very small error is made if the CH_4 and CO_2 contents are added together and counted as CO_2 only. It has also been assumed that the relative specific heats of the various gases do not alter upon mixing together (*i.e.* partial pressure diminished).

The sensible heat loss, of course, is practically absent on hot gas producers if placed near to furnaces, but if not, this loss may be of consequence, and should be

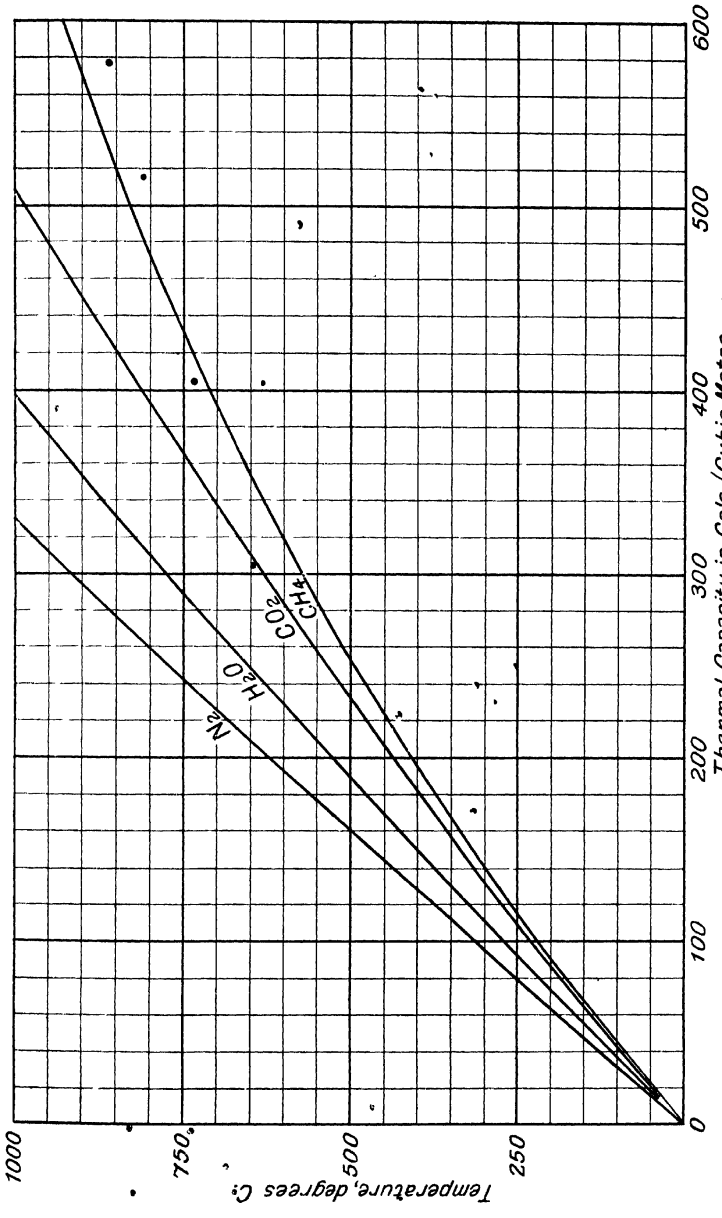

FIG. 17.—SENSIBLE HEAT CONTAINED IN VARIOUS GASES AT VARIOUS TEMPERATURES.

borne in mind when deciding the lay-out of the plant and the principle of producer operation. Although it may be an advantage to have a high carbon monoxide

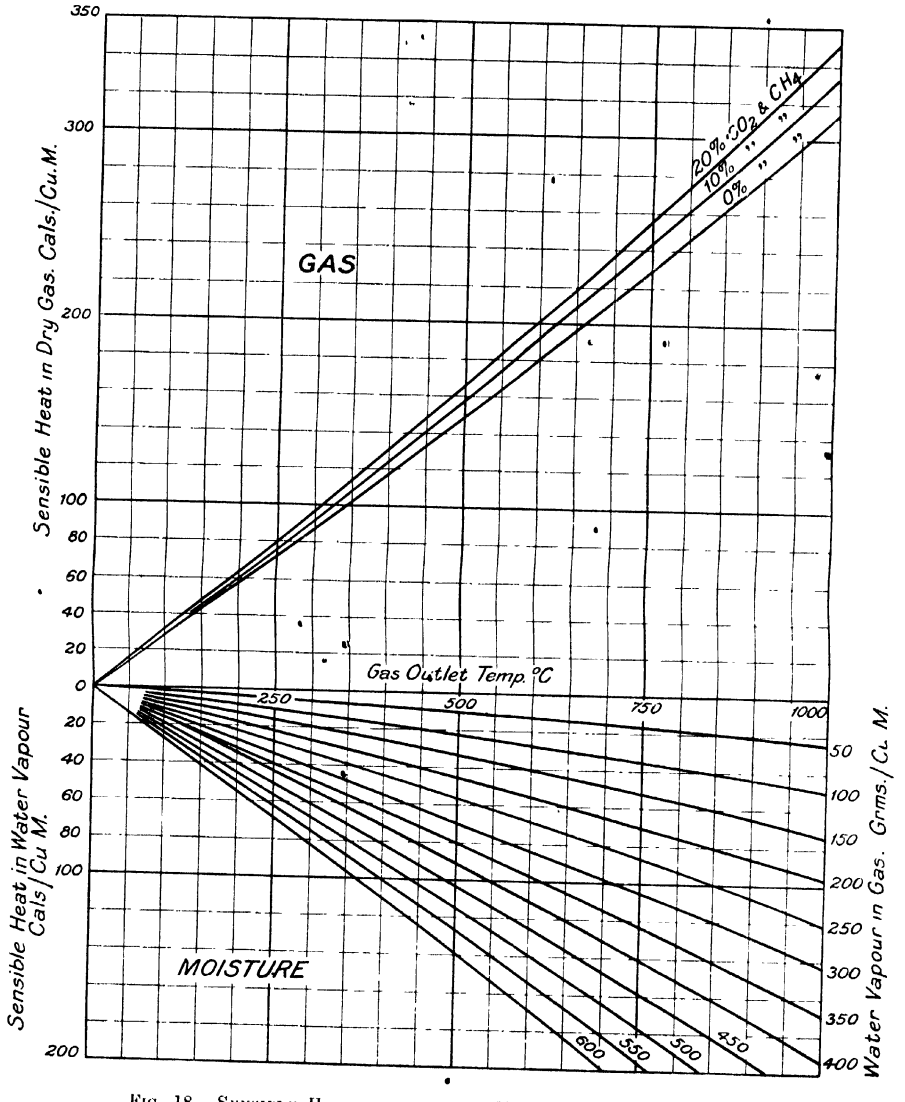

Fig. 18.—Sensible Heat contained in Moist Hot Producer Gas.

content from a heating process point of view, it is often more economical from a thermal point of view to increase the hydrogen content somewhat at the expense

of the carbon monoxide content, thus decreasing the outlet temperature and thereby sensible heat losses due to radiation from mains, etc., while the difference in sensible heat for the two outlet temperatures will be present as the potential heat of the hydrogen in the gas. It should therefore be emphasized that the gas composition is not always a measure of a thermally efficient hot-gas producer plant unless the loss in gas temperature between gas producer and furnace is borne in mind.

Many suggestions have been made as to ways in which the large thermal loss incurred in the sensible heat of the hot gas can be regained, most of which have the object of utilizing this heat for such purposes as pre-heating the air blast or to raise the steam required in the process by cooling the gas, either (1) directly by washing the air blast for the producers with the hot water from the gas-cooling plant, or (2) indirectly by raising steam or heating water in boilers or vaporisers.

A more recent suggestion is to utilize the heat for pre-heating the fuel previous to gasification, and in modern low-temperature gas producers this has been successfully carried out in so far as the sensible heat loss becomes of the order of about 2 to 3 per cent, while the heating value of the gas is increased by 10 per cent or more. (See Case 5, Table 25.)

The detailed examination of each of the ten points mentioned above, and the sum total of the individual thermal losses obtained by such an examination, will enable the thermal efficiency to be arrived at very closely. But before dealing in detail with some examples of the application of the above statements it has been thought worth while to explain the reasons why certain factors, which are sometimes included in thermal balance statements, have been excluded. The following four points are those generally referred to :—

(*a*) Heat of decomposition of the volatile particles of the fuel.
(*b*) Sensible heat in fuel.
(*c*) Temperature of air and steam mixture.
(*d*) Latent heat in undecomposed steam leaving producer.

(*a*) The heating value of the fuel, as determined in the calorimeter, indicates to us the number of heat units set free by burning the fuel completely. Consequently, whether heat is given off or absorbed by the decomposition of the volatile matter, it will be included in the heat as measured by the calorimeter. Since in a gas producer the fuel is burnt completely (just as in a calorimeter), the positive or negative heat of decomposition has already been taken into account when we use the fuel heating value basis as determined by means of a calorimeter.

(*b*) The heating up of the fuel to gas-making temperature is effected by the sensible heat of the hot gases, but in any case since the calorimetric heating value is the basis for the heat balance, and since the heat contained in gas, tar, moisture, and ashes is throughout brought to normal temperature, it will be clear that the sensible heat of the fuel is not to be counted in the heat balance sheet.

(*c*) The steam air mixture has always a higher temperature than that of the surrounding atmosphere.

When, as is generally the case, this increase in temperature is entirely due to mixing the hot steam with the cold air, thereby cooling the former and heating the latter, the heat in the mixture will not exceed that in the steam supplied, and as the steam to be supplied for the producer will be brought into account when determining the *over-all* efficiency, it will be incorrect to add the sensible heat in the air and steam mixture to the heat supplied to the producer when determining the *plain* gasification efficiency.

In some special cases, where an increased heating value of the gas is aimed at, the air and steam mixture are pre-heated previous to introduction into the producer, and in some cases it might, at first sight, seem as if such additional heat should be brought into account. If this pre-heating, as is generally the case, is effected by the hot gas leaving the producer, it is obvious that if we have brought into account the total sensible heat in the hot gas, we have taken this heat into account. Only when the pre-heating (or super-heating) has been done by some external heat supply (in contradistinction to that originating from the gasified fuel) should it be borne in mind in the thermal balance sheet.

It should be noted, however, that the immediate effect of super-heating the blast will be that the average temperature of the fuel bed rises, and consequently the temperature of the gas leaving rises with resulting increase in thermal loss. For this reason we may consider that super-heating of the air blast should be avoided as far as possible, since it not only means that heat is to be added to the air blast, but that sometimes more heat will be lost in the gases leaving the producer.

(*d*) The latent heat in the steam in the hot crude gas has been taken into account so far as it originates from the "moisture" in the fuel. The undecomposed steam in the gas originates from the steam added to the air blast, the latent heat of which will be brought into account when estimating the *over-all* thermal efficiency, and therefore its latent heat does not come under the heading of thermal losses in calculating the *plain* gasification efficiency. The sensible heat of such steam (if any) should, as we have seen under (*c*), be borne in mind.

It may have been noted that all the losses in the gasification process, except the sensible heat loss, can be expressed in terms of the net heating value of the fuel. As, however, it is easier to express the sensible heat loss in terms of the heat contained per unit volume (at N.T.P.) of cold gas, it will be necessary when determining the expected thermal efficiency of gasification for a given fuel, first to determine all the other losses, thus giving as a deficit that heat which must exist as sensible heat in the hot gas and as potential heat in the cold gas. When the ratio between the net available potential heat in the cold gas and the total sensible and potential heat in the hot gas is calculated, the sensible heat loss in terms of the calorific value of the fuel, and therefore the thermal gasification efficiency, can be obtained. Alternatively, by the aid of the curves on fig. 19 the ratio between the sensible and the potential heat in the gas can be determined directly by following the sensible heat abscissa to its intersection with the particular gas heating value curve; the ordinate to this

point will indicate the desired ratio. The true sensible heat loss b in terms of the net heating value of the fuel will be obtained by multiplying a with 100-c (Table 25).

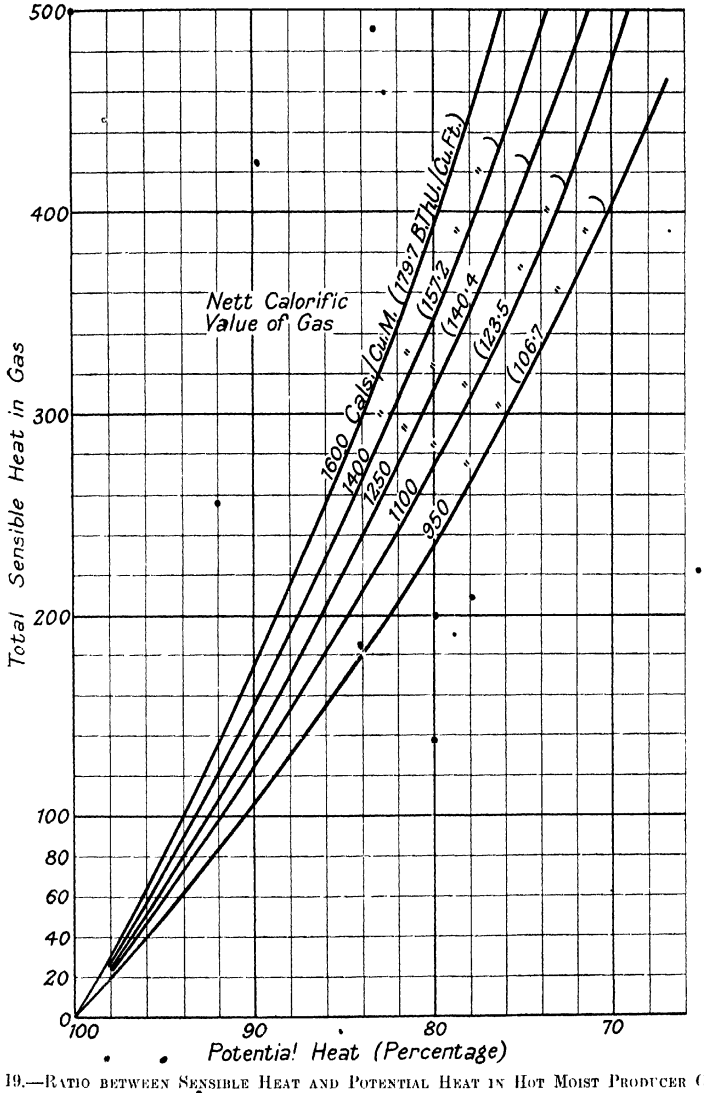

FIG. 19.—RATIO BETWEEN SENSIBLE HEAT AND POTENTIAL HEAT IN HOT MOIST PRODUCER GAS.

To give the reader some idea of how the thermal efficiency of several gas producer plants and fuels alters considerably with the various conditions Table 25

Table 25

Thermal Efficiencies of various Gas Producer Plants

	Types of Plants and Fuels.								
	Bituminous Coal					Anthracite	Coke Breeze	Peat.	Wood.
	Hot Gas	Non-recovery	Mond-recovery	Semi-Mond Recovery Nuts	Low Temp Recovery	Non-recovery	Non-recovery	Recovery	Non-recovery.
	1	2	3	4	5	6	7.	8	9.
Laboratory Examination.									
Fuel Analysis.									
Moisture	5	5	5	5	5	5	15	40	30
On dry sample:									
Ash	12	12	12	8	8	5	30	18	3
Volatile	30	30	30	31 5	31·5	5	6	50	71
T carbon	72	72	72	80	80	87	64	50	47
F. carbon	55	55	55	56 5	56·5	..	..	34	24
Hydrogen	4 5	4 5	4 5	5·0	5 0	..	..	5 5	5·8
Net B.T.U. per lb.	11,750	11,750	11,750	12,250	12,250	14,000	9,800	8,250	8,500
Fuel grading:									
Above ½ in	60	60	60	94	94	100	15	Lumps.	Blocks.
½ in. to ¼ in.	20	20	20	4	4	.	36	..	..
Below ¼ in	20	20	20	2	2	..	50	..	..
Per cent tar yield in small retorting test.	..	7	7	10	10	..	..	..	8 5
Ratio of cal. val. tar : fuel	..	1·3	1 3	1·25	1 25	..	..	1 8	1 75
Expected Working Results.									
Cold gas analysis:									
CO_2	5	9	16	11	8 3	7·5	7	20	11
CO	27	22	11	17 5	21 0	24·0	24 5	9	20
CH_4	4	3	3	3·3	5 0	1·2	1 1	3 3	3 3
H_2	12	18	26	21 5	20 5	16 5	11·0	21	16
N_2	52	48	44	46 7	45 2	50 8	56 4	43 7	49 7
Net B.T U. per cub ft.	165 9	156 7	142 3	154 4	179	141·8	126 7	124	146·9
Cals per cub m	1476 5	1394 6	1266 5	1374 4	1593	1262	1127 6	1103 6	1307 4
Outlet temperature of hot crude gas, ° C.	800	700	550	400	150	700	700	150	250
Moisture in hot crude gas, g. per cub. m. (N.T.P.)	30	110	430	150	60	40	90	600	450
Per cent carbon in ash.	10	10	10	10	10	20	20	12	10
Tar yield per cent	..	4	5	8	10	.		7 7	7·5
Assessment and Calculated Results of Thermal Loss in per cent of Net Heating Value of Fuel.									
Moisture loss	0 5	0 5	0 6	0 5	5	0 3	2 2	9 5	6 0
Tar loss	Nil	5 2	6 5	10 0	13 0	Nil.	Nil.	14 0	13·0
Dust and soot losses	3 5	3 0	3 0	0 5	5	0·5	2 0	1 5	2·0
Ash loss	1 6	1 6	1 6	1 0	1 0	1 2	10 5	4 5	0 5
Radiation loss	1 0	1·0	1·0	1 0	1 0	2 0	1 2	1·5	1·5
Leakage losses	0 5	1·0	1·6	1 0	1·0	1 0	1 5	1·5	1 5
Total	7 1	12 3	14·1	11·0	17 0	5 0	17 4	32 5	24·5
(*a*) Remaining in hot gas as total sensible and potential heat	92 9	87 7	85·9	86·0	83 0	95 0	82 6	67·5	75·5
(*b*) Sensible heat loss as calculated below	14.1	14·0	16 2	9·4	2·5	15·2	16 3	8·2	8·3
Sensible Heat Loss in Cals. per cub. m. of Gas (N.T.P.).									
Per cent CO_2 and CH_4	* 9	12	19	14 3	13·3	8·7	8 1	23·3	14·3
Per cent diatomic gases	91	88	81	85·7	86 7	81·3	91·9	76·7	85·7
Heat in dry gas	259	228	180	128	46	224	224	50	79
Heat in steam	12	36	110	28	4	14	30	42	51
Total sensible loss, cals. per cub. m.	271	264	290	156	50	238	254	92	130
Potential heat of gas	1476·5	1394 6	1266 5	1374 4	1593	1262	1127·6	1103·6	1307·4
Total heat of hot gas, cals. cub. m.	1747·5	1658·6	1556·5	1530·4	1643	1500	1381·6	1195·6	1437·4
(*c*) Ratio—$\frac{\text{Potential heat}}{\text{Total heat}}$	84 5%	84%	81·2%	89 2%	97·0	84%	81·6%	92·4%	89·0%
Thermal Efficiency	**92 9**	**73 7**	**69 7**	**76 6**	**80·5**	**79 8**	**67 4**	**62 3**	**67·2**

* This calculation is made only for comparison, and the loss only exists in practice in a degree corresponding to the difference in the gas temperature at furnace and leaving producer.

has been prepared. This table deals with nine different cases, some of which represent actual figures obtained in practice, others, what may reasonably be expected, under the conditions laid down.

Cases 1, 2, and 3 will serve to indicate the typical differences between producer gas plants in which the same bituminous fuel is converted into hot crude gas (1), or cold gas, without recovery of by-products (2), or Mond by-product producer gas (3); the respective thermal efficiencies being 92·9, 73·7, and 69·7 per cent.

Cases 3, 4, and 5 will serve to indicate typical causes for the differences in thermal efficiency between three types of by-product producers, (3) Mond type, (4) semi-Mond type, and (5) true low temperature gas producer; the respective thermal efficiencies being 69·7, 76·6, and 80·5 per cent.

Cases 6, 7, 8, and 9 relate to plants in which anthracite, coke breeze, peat, and wood respectively are used, the respective thermal efficiencies being 79·8, 67·4, 62·3, and 67·2 per cent.

NOTE.—These results are mainly given to serve as an example, and each of the fuels or plants mentioned may give ultimate results, differing from those quoted, depending upon their particular operating conditions.

The first main column of the table gives such particulars of the fuel in use as are obtained by a proper laboratory examination. The second main column of the table gives the working results obtained under practical working conditions. The following columns contain assessed or calculated heat losses which have been based upon the information contained under these two sub-headings. A few examples will serve to indicate how each individual property of the fuel or working result of the plant affects the efficiency.

Moisture Loss.—This is a predominant loss in the cases of the peat and wood producers, being between 10 and 6 per cent.

Tar Loss.—With bituminous coals this is of a considerable amount for the by-product recovery producers (4) and especially (5), but the heat in such tar is really not lost, since the tar can be used as a crude fuel oil. The tar loss is also of importance for the peat and wood fuels (8 and 9), which importance is particularly emphasized by the fact that the heating value of these fuels is less than that of the bituminous fuels, referred to under headings (4) and (5).

Dust and Soot Loss.—This is highest in the cases where (*a*) the fuel contains a large number of fines, say, coke breeze or slack, and where (*b*) the gas outlet temperature is high, causing a high velocity, say Case (1).

Ash Loss.—This is highest for fuels rich in ash, such as the coke breeze (7) and peat (8).

The Sensible Heat Loss.—This is naturally high for the producers having a high gas outlet temperature, say, Cases (2), (5), and (7), or where the crude gas contains a large amount of moisture, say Case (3); on the other hand, the sensible heat loss is an inconsiderable amount where the gas outlet temperature is low, as in Cases 8 and 9, but particularly in Case 5, the low temperature bituminous coal producer.

To give some idea as to how the *steam consumption* of each individual plan

will affect the over-all thermal efficiency, the following figures have been calculated for Cases 1 to 9 in Table 25 under the assumption that the heat required per lb. of steam supplied to the producer will be 1400 B.T.U.

	Case Number.								
	1.	2.	3.	4.	5.	6.	7.	8.	9.
Extra steam required in lbs. per lb. of T.D. fuel . .	·5	·75	1·75	·75	·9	·8	·5	·4	·25
Heat contained in this steam B.T.U. .	700	1050	2450	1050	1260	1120	700	560	350
Heat in steam in per cent on heat in fuel gasified . . .	5·95	8·93	20·85	8·58	10·3	8·0	7·14	6·79	4·12
Thermal efficiency including steam .	87·7	67·7	57·7	70·6	72·1	73·9	62·9	58·4	64·5

In comparing these figures with those of other gas generating plants, it should be borne in mind that in many cases no extra steam is required for the producer, such as assumed above, since this may be generated by utilizing the waste heat from the gas-producing process or the heat obtained from the tar oils for steam-raising purposes.

(C) GAS QUALITY AND QUANTITY

From Chapter II. we have seen what are the principles underlying the formation of gas in the producer, and that the final gas will consist of the following common constituents :—

CO_2 . .	Carbon dioxide.
O_2	Oxygen.
CO	Carbon monoxide.
CH_4 . .	Methane or saturated hydrocarbons.[1]
C_2H_4 . . .	Ethylene or unsaturated hydrocarbons.[1]
H_2	Hydrogen.
N_2	Nitrogen.

The relative quantities formed of combustible gases containing either carbon or hydrogen with a given fuel and gas producer type will mainly depend upon the temperature in the decomposition zone, the quantity of steam added to the air used for gasification, and the depth of the fuel bed.

[1] NOTE :—When methane is determined in a gas it includes the gases of the same series, such as C_2H_6, etc., the calorific values of which are higher than CH_4. A similar remark applies to C_2H_4, which, however, seldom is present in any quantity in producer gas.

GAS QUALITY

The measure that we adopt for the quality of a gas is its heating value, and although for certain purposes of application it is important to maintain the quantity of one or more of the constituents of the gas within certain limits, we may take it as a general rule that the higher the heating value of the producer gas the more useful will it become for general industrial purposes. (For other special considerations of gas quality see pp. 505-524.) The terms used for the heating value of a gas are :—

(1) B.T.U. per cub. ft. at N.T.P. (2) Cals. per cub. m. at N.T.P.,

thereby expressing the number of heat units given out by burning one unit of gas volume as measured at normal temperature and pressure, which latter is taken to be the chemical reference standard, viz. a temperature of 0° C. and a pressure of 760 mm. mercury column.

The heating values of the various combustible gases have been determined by several researchers, who obtained the following somewhat varying results :—

Gas.	Net Heating Value.		Researcher.
	B.T.U.'s/cub. ft.	Cals./cub. m.	
CO	344·1	3,060	Berthelot.
	340·5	3,015	Favre and Silbermann.
	..	3,044	Thomsen.
	..	3,066	Winkler.
	..	3,064	Lunge.
H_2	287·2	2,556	Bunte.
	289·8	2,578	Thomsen.
	..	2,581	Winkler.
	..	2,585	Lunge.
	..	2,603	Favre and Silbermann.
	293·2	2,608	Berthelot.
CH_4	..	8,417	Thomsen.
	..	8,498	Favre and Silbermann.
	962·5	8,556	Bunte.
	..	8,606	Lunge.
	971	8,640	Berthelot.
	..	8,697	Winkler.
C_2H_4	..	13,848	Thomsen.
	..	14,009	Favre and Silbermann.
	..	14,045	Winkler.
	..	14,060	Lunge.

From these figures the following average values may be taken as being sufficiently accurate for practical purposes :—

TABLE 26

	Heating Value at N.T.P.			
	Net.		Gross.	
	B.T.U./cub. ft.	Cals./cub. m.	B.T.U./cub. ft.	Cals./cub. m.
CO, carbon monoxide	**342**	**3,045**	342	3,045
H_2, hydrogen	**290**	**2,580**	344	3,063
CH_4, methane	**955**	**8,500**	1,063	9,460
C_2H_4, ethylene	**1,573**	**14,000**	1,681	14,960

We distinguish between the net and the gross heating value of a gas, the net heating value being the one generally accepted as the best comparative basis for practical work.

For gases containing hydrogen there is a difference in the quantity of heat given off by combustion, depending upon whether the steam formed by the combustion of the hydrogen is condensed or not. The gross heating value expresses the heat given off if the products of combustion are cooled to N.T.P., *i.e.* if all the steam is condensed ; this condition is of course not obtainable in practice. Hence the practical measure "*net heating value,*" which expresses the total number of heat units given off by the products of combustion, if cooled to N.T.P., *less* the latent heat of the steam.

Since producer gas manufacture is a process which is entirely self-supporting in regard to the heat required for the conversion of the solid energy into gaseous, it will be clear that the higher the thermal gasification losses the more of the fuel will have to be completely burnt in the producer to counterbalance these losses. For this reason we may classify the factors directly affecting the heating value of the gas to be the following :—

1. **Moisture content in fuel.**
2. **Temperature of and sensible heat contained in gases leaving the producer.**
3. **Radiation losses from the producer proper**
4. **Fusing temperature of ash.**
5. **Fuel depth and load factor.**
6. **Nature of volatile matter and amount of fixed carbon in fuel.**

1. MOISTURE CONTENT IN FUEL

On pp. 48, 49 we saw that for a peat containing 50 per cent moisture, and having a heating value of 4000 cals./kg., it was necessary to burn so much of the fuel as corresponds to 10 per cent of the heat contained in the dry substance to

supply the heat required to evaporate the moisture. Obviously, therefore, we can lay down the rule that *the higher the moisture content in the fuel the lower will be the heating value* of the final gas. Apart from drying the fuel previous to its admission to the producer, the only means that we have to make this decrease in heating value as low as possible is to provide for such a fuel depth as will ensure that the sensible heat contained in the hot gases generated in the lower part of the producer is utilized to the utmost extent in driving off moisture.

A very typical example as to how the moisture content will show its effect upon the gas quality when insufficient fuel depth is provided is contained in Table 27,[1] extracted from a series of tests made on a German wet brown coal containing 57 per cent moisture as charged into the producer.

TABLE 27

Pressure Loss in Fuel Bed, cm. W.G.	Total Fuel Depth.	Gas Outlet, Temp. ° C.	Gas Analysis Vol. per cent.					Net Heating Value at N.T.P.	
			CO_2	O_2	CO	H_2	CH_4	Cals./ cub. m.	B.T.U./ cub. ft.
13·3	850 mm. 33½″	470	9·3	..	14·0	6·6	·6	648	72·7
15·3	900 mm. 35½″	440	9·2	..	13·8	6·9	·6	650	72·9
16·0	1000 mm. 39½″	360	7·3	..	18·3	12·2	1·2	974	109·4
5·9	1200 mm. 47¼″	145	9·5	0	22·8	13·8	1·5	1177	132·3
6·0	1300 mm. 51¼″	125	9·0	..	23·0	14·3	·7	1129	126·8
15·3	* 1350 mm. 53¼″	200	9·3	·1	23·3	11·9	1·4	1135	127·5

* This series represents the average of several days' tests when the average hourly rate of gasification of theoretically dry brown coal was 72·5 kg. per sq. m. (14·6 lb. per sq. ft.). No gasification rate is given for the remaining gas analyses, but it can be judged approximately by comparing the various pressure losses in the fuel bed.

It should be remarked that not only is the final gas quality altered by insufficient utilization of the sensible heat in the hot gas due to a low fuel depth, but the chilling effect by the presence of the moist fuel very close to the decomposition zones in

[1] Gwosdz. *Öl- u. Gasmachine.* No. 1. 1921.

the producer lowers the temperature considerably, thus preventing proper reduction of carbon dioxide and steam into a good-quality producer gas.

2. The Temperature of and the Sensible Heat contained in the Hot Gases leaving the Producer

When gasifying the same Yorkshire bituminous nut coal at the same gasification rates, but in different producers giving varying gas outlet temperatures, the author has obtained the results given in Table 28.

Table 28

	Test No.		
	I.	II.	III.
Gas outlet temperature ° C.	550	350	150
Moisture in gas :			
Gr./cub. m. (N.T.P.)	200	150	60
Analysis of cold gas volume per cent :			
CO_2	12·8	10·5	8
CO	16·6	18	21
CH_4	3·0	3·5	5
H_2	22·8	22·5	21
N_2	44·8	45·5	45
Net heating value at N.T.P. :			
B.T.U./cub. ft.	151	160·2	180·5
Cals./cub. m.	1344	1426	1606
" Sensible heat loss " in per cent on net heating value of gas	17·3	9·5	3·2

It will be obvious that if the sensible heat loss in the hot gases becomes smaller (generally due to lower gas outlet temperature), then a smaller quantity of the fuel will have to be completely burnt to balance this heat loss, and consequently less air will be required for supporting the gasification process, with the result that the heat concentration of the final producer gas is increased. The results in Table 28 confirm that this is actually the case in practice. We shall therefore be justified in laying down the rule that under even rates of gasification *the lower the sensible heat contained in the hot gases leaving the producer, the higher will be the potential heat (heating value) of the gas.*

3. The Radiation, Convection, and Conduction Losses from the Producer proper

Just as the heat required to balance the sensible heat loss and moisture loss has to be supplied by burning part of the fuel more completely, so will a more complete burning of the fuel be required to balance the radiation and convection losses to the atmosphere. As we have seen, except in the case of producers which are cooled by artificial means, such as water jackets, the thermal losses on this account generally do not exceed 1 to 2 per cent, and hence the effect upon the gas quality on this score is generally of minor importance.

In so far as the radiation and conduction losses tend to decrease the temperature in the decomposition zones, we may look upon these as having a double influence upon the gas quality, viz. (*a*) due to the requirement of counterbalancing the heat loss, and (*b*) due to a decrease of the temperature in the decomposition zones. However, this latter point will hardly play an important part except in the case of water-jacketed producers.

4. Fusing Temperature of Ash (see also pp. 117-127)

Since the fusing temperature of the ash gives us a guide as to the temperature at which we may encounter serious difficulties in operation due to clinker formation (except perhaps when complete slagging of the ash is aimed at), the ash composition will indirectly affect the gas quality in so far as the only means generally in the operator's power to reduce the temperature in the lower zones in the gas producer is to alter the quantity of steam added to the air supply. But as the proportion of steam and air is altered, so is also the gas composition and gas quality altered. It is, however, very difficult to lay down any guiding rule as to the influence of the fusing temperature of the ash upon the gas quality, except perhaps that the lower the fusing temperature the higher will be the hydrogen, and the lower the carbon monoxide content in the producer gas.

5. Fuel Depth

So far as the effect upon gas quality is concerned, we may say that, within limits, the greater the fuel depth the better the gas quality when the producer is worked at the same rate or under the same load factor. On the other hand, if the gasification rate of a producer be reduced we may say (again within limits) that the gas quality will increase. In either case the increased gas quality will be due to increased time of contact for the gases, but while with an increased fuel depth the temperature in the decomposition zone is probably not affected, this cannot be said if the load factor is *considerably* decreased. The more economical way of the two in which to obtain an increased heating value on a given producer is obviously to increase the fuel depth.

6. The Nature of the Volatile Matter and Amount of Fixed Carbon in the Fuel

From pp. 25, 26 we have realized how the composition and the quantity of distillation gas (that is, gaseous volatile matter) may distinctly affect the final producer gas quality, consequently for fuels containing a large amount of volatile matter a distillation test carried out in the laboratory on the fuel should give a useful guide as to a possible gas composition.

It will be obvious that the volatile matter of the fuel will, practically speaking, be removed by "sensible heat" distillation previous to the fuel entering the decomposition zones in the gas producer, and that therefore on gasification no combustion will take place of the volatile matter.

We have seen, however, that part of the fuel has to be burnt to balance the various heat losses incurred during the gasification; consequently if the volatile matter is not burnt, it must be the charred residue, the "fixed" carbon, which has to supply this heat by being burnt more or less completely as the case may be. We may therefore consider producer gas made from a volatile fuel to be a mixture of the distillation gas and a "coke" producer gas of a heating value, which will alter directly with the fixed carbon content of the fuel and inversely with those thermal losses which affect the heating value.

Sufficient research has not yet been accomplished to enable us, by the sole guidance of laboratory tests, to lay down in advance what heating value may be expected of producer gas obtained from a fuel which has never been gasified before. As an example illustrating the way in which this might, perhaps, be accomplished, the two comparisons between laboratory and large scale gasification tests are given in Table 29.[1]

In the case of Test 4 it will be seen that 17·8 per cent of the coke was burnt, while in Test 16 the amount was 28·4 per cent, with the result that the heating value of the "coke" gas is very much lower for the latter case than for the former.

GAS QUANTITY

If the thermal efficiency of the producer and the calorific value of the gas and of the fuel be known, the gas volume made per unit weight of fuel is given, *i.e.* these four factors are interdependent. It should be mentioned, however, that the measuring of the gas quantity made from a plant is often more easy to accomplish than the making of a thermal balance, in which case the thermal efficiency will be determined from the gas volume and the heating values. At this stage we shall concern ourselves only with the gas volume alterations obtained upon gasification of the carbon.

[1] Rambush, *J. Soc. Chem. Ind.*, December 31, 1921.

TABLE 29

No. of Test.	4.	16.
Moisture content in fuel	7·35%	51%
Volatile matter in dry fuel substance	31·3	61·2
Heating value in B.T.U./lb. dry substance	12,150	7,070
Laboratory Test:		
Cub. ft. distillation gas (N.T.P.) per ton dry fuel	7,025	10,450
Net heating value of gas B.T.U./cub. ft.	560	284
Coke yield in lbs. per ton dry fuel	1,539	1,080
Net heating value of coke B.T.U./lb.	12,860	7,867
Practice:		
Cub. ft. (N.T.P.) of producer gas per ton T.D. fuel	130,000	70,700
Net heating value of gas B.T.U./cub. ft.	155	127·5
Total B.T.U. in gas per ton T.D. fuel	20·2 mill.	9·04 mill.
Thermal gasification efficiency	74·5%	57%
Calculations *re* Coke Gas:		
Total heat in distillation gas per ton T.D. fuel B.T.U.	3·93 mill.	2·96 mill.
Total heat in coke gas per ton by difference B.T.U.	16·23 ,,	6·08 ,,
Volume of coke gas per ton cub. ft. by difference	122,975	60,250
I.e. Net heating value of coke gas B.T.U./cub. ft.	132	101
Coke gasification efficiency per cent	82·2	71·6

Table 30 gives the gas volumes produced per kg. of carbon when gasified by means of air or steam, in accordance with the various reactions that generally take place in a gas producer. It also gives the various air and steam quantities as well as the heating value of gas produced. In working out this table it has been assumed that air contains 21 per cent oxygen, the remainder being nitrogen; actually the oxygen content is slightly less, but not sufficient to make any appreciable difference upon the gas and air volumes given.

On the basis of the same thermal efficiency being obtained, it is clear from the table that the more air is used for gasifying the fuel, the larger will be the gas volume, and consequently the lower the heating value.

Except in the cases where large quantities of steam are introduced with the air blast, we may lay down the rule that the lower the percentage of nitrogen in the gas, the more efficient is the producer likely to be.

TABLE 30

Reaction of Carbon with Air or Steam.		Gas Vol. (N.T.P.) per unit weight of Solid Carbon.		Net Heating Value of Cold Gas (N.T.P.)		Air Vol. (N.T.P.) per unit weight Solid Carbon.		Weight of Steam per unit weight of Solid Carbon.
		M^3/kg.	$ft.^3$/lb.	B.T.U./cub. ft.	Cals./m^3.	m^3/kg.	$ft.^3$/lb.	
Air	$C + O_2 + \frac{79}{21}N_2 = CO_2 + \frac{79}{21}N_2$	8·9	142	Nil	Nil	8·9	142	Nil
	$C + CO_2 + \frac{79}{21}N_2 = 2CO + \frac{79}{21}N_2$	10·75	172	118·75	1057	Nil	Nil	Nil
	$2C + O_2 + \frac{79}{21}N_2 = 2CO + \frac{79}{21}N_2$	5·37	86	118·75	1057	4·45	71	Nil
Steam	$C + H_2O = CO + H_2$	3·73	59·7	316·0	2812	Nil	Nil	1·5
	$C + 2H_2O = CO_2 + 2H_2$	5·6	89·6	193·3	1720	Nil	Nil	3

(*D*) RECOVERY OF BY-PRODUCTS

Although the first capital outlay involved may be higher for a gas producer plant in which by-products are recovered than for a plant in which they are not, it will be found worth while for those who have to choose a fuel or gas producer plant to consider the possibility of obtaining not only the highest thermal efficiency and gas quality, but also such by-products as a particular fuel is likely to yield simultaneously with the producer gas.

Inasmuch as a modern by-product gas producer of the low temperature type is the one most likely to give the highest thermal efficiency when manufacturing cold and clean gas, it will be obvious that the future tendency in large scale gas producer practice is likely to be the development of a low temperature by-product gas producer which, apart from its ideal thermal efficiency, also enables us to supply in the shape of nitrogenous fertilizers and liquid hydrocarbons or carbohydrates, products which may be absorbed in our agricultural, chemical, and other industries, at a very much higher commercial and national economic value than they possess in their original state purely as a part of the combustible value of a solid fuel.

The by-products which, under suitable conditions, may be obtained in a gas producer are :—

1. Ammonia.
2. Condensable hydrocarbons and carbohydrates, such as tar, oils, etc.
3. Sulphur.

In the following we shall study what are the best conditions for yielding the highest quantity of each of the three classes of by-products mentioned, and what may reasonably be expected in practice, given a certain suitable fuel and gas producer.

1. Ammonia Formation

The origin of the ammonia, at the present stage of gas production, is the nitrogen in the fuel only. This conclusion is based upon the fact that the amount of nitrogen contained in the ammonia made in a gas producer plant is always less than and always alters with the nitrogen contained in the fuel. Various inventors have endeavoured in the past to cause the nitrogen in the air blast to combine to form ammonia with the hydrogen formed by reduction of the steam, but so far no one has been successful.

The nitrogen content of fuels generally does not exceed 3 per cent but varies considerably, as will be obvious from the following list :—

Fuels.	Nitrogen Content.
Anthracite generally	less than 1 per cent.
Natal anthracite	2·5 per cent.
English or German bituminous coals	·5 to 1·9 per cent.
American bituminous coals	·5 ,, 2 ,,
Brown coal and lignites	·5 ,, 2 ,,
Peat	·5 ,, 3 ,,
Woods	·2 ,, ·8 ,,

Since the nitrogen contained in the fuel is the source of the ammonia, it will be clear that *the higher the nitrogen content, the higher is the ammonia yield* likely to be. The state of the nitrogen in the fuel, however, differs considerably with the various fuels, and as we do not possess any definite knowledge of the chemical structure and composition of all the various bodies which enter into combination with one another to form a *fuel*, we are not able to judge definitely from an ordinary fuel analysis as to what is the amount of ammonia that a fuel with a certain nitrogen content will yield in practice.

On introduction into a gas producer the fuel is treated at a lower temperature than during later stages of the gasification process, it being submitted to a more or less gradual rise in temperature, with the effect that the volatile matters in the fuel are first distilled off (by the hot producer gases from the lower part), after which the residual coke is subjected to gasification proper.

From the point of ammonia formation only, we may consider the formation of this gaseous compound as taking place in two stages, viz. the distillation stage and the gasification stage, each of which may more or less merge into the other, depending upon the content of volatile matter in the fuel, the particular producer design, and the relative quantities of air and steam in the air blast. For these reasons we shall study the evolution of ammonia, *firstly*, from the volatile products of the fuel by heating only ; and *secondly*, from the coke by gasification ; *thirdly*, we shall refer to the combined result of these two processes in actual gas producer practice.

(a) *Ammonia Evolution by Heating only*

In distillation gas practice it has been found that some of the nitrogen of the fuel is present in the resultant gas as ammonia or nitrogen, although a large part remains behind in the coke.

TABLE 31

DISTRIBUTION OF NITROGEN IN CRUDE FUEL IN DISTILLATION PRODUCTS

	Bituminous Coal.					Shale.
	Gas Retorts.	Westphalian.		Saar	English Coke Ovens.	Brox-burn.
		I.	II.			
	Foster.	Knublauch.			Short.	Rowan.
Per cent nitrogen :						
In ammonia . . .	**14·5**	**11·9**	**14·1**	**15·9**	**15·16**	**32·8**
In coke	48·68	30·0	35·6	63·9	43·31	45·7
In tar oils, cyanogen, etc.	1·56	3·1	3·2	4·1	4·41	20·0
Loss	35·26	55·0	47·1	16·1	37·12	1·5

Table 31 gives a few examples of the distribution in the various retorting products of the nitrogen originally in the fuel; from this it is especially obvious that very different results are obtained as to the amount of nitrogen retained in the coke and obtained as elemental nitrogen. In recent years experiments have been made to endeavour to find how various factors are likely to affect the nitrogen distribution. The factors that have generally been studied are (*a*) the effect of the nature of the fuel, (*b*) the effect of temperature, and (*c*) the effect of time.

Christie [1] gives the results of distilling fuels of *various types* in Table 32A, which indicates that the amount of ammonia given off by the volatile matter in the fuel is highest for the younger fuels, while, on the other hand, the amount of nitrogen retained in the coked residue increases with the age of the fuel.

That this rule does not entirely hold good will be seen from the results obtained by the author on determination by distillation of the volatile ammonia in various fuels (Table 32B).

Although the content of ammonia in the distillate is higher for lignites and peat than for bituminous coals, it is generally less in recent vegetable formations such as the two last fuels referred to in Table 32B. Probably peat is richer in ammonia-yielding bodies than are fresh vegetable fuels, due to the more advanced decay of the organic materials.

[1] *Stahl u. Eisen*, 1910.

TABLE 32A

EFFECT OF NATURE OF FUEL UPON NITROGEN DISTRIBUTION IN DISTILLATION PRODUCTS

	Anthracite.	Bituminous Coal.			Peat.
	Aix-la-Chapelle.	Aix-la-Chapelle.	Consolidation.	Yorkshire.	Bremen.
Coke yield by distillation.	94·8	77·3	68·4	64·5	31·7
Per cent of nitrogen in coal present in:					
Coke	63·65	54·0	43·6	42·6	24·0
Ammonia . . .	**25·85**	**33·8**	**29·1**	**29·5**	**40·3**
Other volatiles . .	10·5	12·2	27·3	27·9	35·7

TABLE 32B

	Bituminous Fuels.				Lignites.		Peat.	Kurdi Husks.	Wood Refuse.
	Nottinghamshire.	Scotland.	France.	South Africa.	Spain.	Australia.			
Fuel:									
Per cent volatile matter	31·7	32·2	15·56	21·7	49	50·8	67·9	73·3	82·4
Per cent nitrogen . .	1·42	1·44	1·12	1·43	·67	·63	2·8	·7	0·18
Ammonia obtained by dry distillation in per cent on nitrogen in fuel. .	**12·9**	**20·2**	**15·3**	**23·4**	**35**	**22**	**50·4**	**15**	**2·5**

Since fuels of recent vegetable origin are not likely to be used for recovery of ammonia on account of their nitrogen content being low, this exception from the rule found by Christie is more of theoretical than practical interest.

Similar results to those of Christie were obtained by Rau and Lambris,[1] who also studied the effect of temperature (see Table 33).

Mayer and v. Altmeyer [2] obtained the results quoted in Table 34 when heating a Saar coal containing 1·13 per cent nitrogen for three hours' duration.

From Tables 33 and 34 it will appear that the ammonia yield is generally highest at a temperature of about 800° C., although possibly the lower ammonia yield at 900° C. may be caused by a secondary decomposition of the ammonia into elemental nitrogen and hydrogen. Further, it would appear that at lower temperatures more of the nitrogen is obtained in the tar and oils than at higher

[1] *Journ. für Gasbl.*, 1913.

[2] *Ibid.*, 1907.

temperatures; whether this is due to the fact that the volume ratio of "tar vapour" to gas vapour is highest at low temperatures is difficult to say, but the distillation result of the Broxburn shale (Table 31) (which is from a low temperature distillation retort) might seem to confirm this. On the other hand, Gluud and Breuer[1] find

TABLE 33

PERCENTAGE OF NITROGEN IN VARIOUS BITUMINOUS COALS OBTAINED AS AMMONIA AT DIFFERENT TEMPERATURES

Per cent volatile in dry coal . . .	34·63	29·61	19·85	7·59
Per cent ash ,, ,, . .	2·14	2·58	3·67	5·12
Temperature up to 390° C. . .	2·6	1·1	1·6	1·5
,, ,, 510° C. . .	8·6	5·6	4·5	3·6
,, ,, 670° C. . .	25·3	24·1	19·4	14·9
,, ,, 815° C. . .	31·1	30·6	25·6	22·2

TABLE 34

EFFECT OF TEMPERATURE UPON DISTRIBUTION OF NITROGEN IN DISTILLATION PRODUCTS

Temperature ° C.	600	700	800	900
Time to reach temperature in minutes	30	40	54	75
Coke yield by distillation . . .	69·6	68·1	65·5	65·0
Per cent of nitrogen in coal present in:				
Coke	72·4	70·1	65·2	62·1
Ammonia	**10·6**	**19·6**	**21·7**	**20·8**
Gas	5·13	7·98	9·43	15·61
Tar, cyanides, etc.	11·87	2·32	3·67	1·49

the distribution of the nitrogen by low temperature distillation (in a revolving retort) of a coal containing 39·7 per cent volatile matter and 2·1 per cent nitrogen to be as follows:—

In L.T. coke	66·1	per cent on nitrogen in coal.
In ammonia	1·8	,, ,, ,,
In tar, etc.	4·8	,, ,, ,,
As free nitrogen	10·8	,, ,, ,,
Total	83·5	per cent.

[1] *Abhand. z. Kenntnis der Kohle*, 1919.

It will be noted that some (16·5 per cent) of the nitrogen in the coal could not be accounted for, this being attributed by these researchers to an insufficiently accurate method for estimating the nitrogen in the coal and coke. Nevertheless these tests are not only of interest in so far as they show that more nitrogen is present in the tar than in the ammonia, but also because the total amount of nitrogen driven off as compounds in the tar and the ammonia is very much less than that given off as *elemental nitrogen.* If this be correct, then we can hardly look upon the free nitrogen obtained by other researchers as mainly originating from the decomposition of the ammonia.

When heating a bituminous coal at somewhat higher temperatures Monkhouse and Cobb [1] report the following result, with a Yorkshire coal containing 1·67 per cent nitrogen :—

Temperature of coking ° C. . . .	500	800	1100
Duration of coking, hours . . .	5¾	7½	6¾
Coke yield per cent	70·0	62·6	55·5
Per cent N. in coke	1·87	1·34	·58

These figures would seem to indicate that the nitrogen in the fuel is more completely removed the higher the final temperature of heating. The very low nitrogen content in the coke made at 1100° C. does not seem to bear out the conclusions drawn by Christie as referred to below as regards the stability of the nitrides.

By heating a bituminous coal to 865° C. for very long periods Christie [2] obtained the following results :—

	Time.		
	12 minutes.	80 minutes.	170 hours.
Per cent of nitrogen in coal present in :			
Coke	66·42	56·92	37·35
Ammonia	33·58	18·25	27·45
Difference		24·83	35·2

From his researches Christie comes to the conclusion that the quicker the heating up of the coal, the higher will be the quantity of the nitrogen which is retained in the coke. He assumes that the nitrogen combines with the carbon in the fuel to form very stable nitrides, which are only decomposed by heating to high temperatures (up to 1800° C.) for a considerable length of time. A duration of heating of 170 hours is, however, not likely to prove economical in practice.

From the above-quoted experimental results we may draw the following

[1] *Gas Journal,* October 19, 1921.

[2] Dissertation Aachen, 1906–(1908).

conclusions in regard to the quantity of ammonia evolved from a fuel by heatin only :—

(1) The ammonia yield will alter with the nature of the fuel; i is generally lowest for the fuels with a low content of volatile matter

(2) If a fuel is heated at a constant temperature between 500 and 900° C. the ammonia yield will be the higher the longer the fue is heated.

(3) A temperature of about 800° C. seems to be favourable fo the highest volatile ammonia yield, while practically no ammoni is driven off below 500° C.

(4) Some nitrogen will be eliminated from the fuel as elementa nitrogen; this elimination being generally favoured by high tem peratures, which favour a decomposition of the ammonia formed.

(b) *Ammonia Evolution by Gasification of Coke*

In the preceding we have studied the evolution of ammonia by the heatin of the fuel only. To understand the principles underlying the conversion of th "fixed" nitrogen in the coke into ammonia it will be necessary to study in a pre liminary way the physico-chemical laws that affect the ammonia *decomposition.*

Ammonia on heating decomposes into the elements nitrogen and hydrogen the amount decomposed being dependent upon the time of contact and the tem perature and the pressure of the system. Assuming sufficient time be given, ther the three gaseous bodies may be assumed to be in a state of dynamic equilibriun with one another in accordance with the following reversible reaction :

$$2NH_3 \rightleftarrows 3H_2 + N_2.$$

Table 35 gives the volume percentages of the three gases which will be ir complete equilibrium with one another at various temperatures, if sufficient tim be given for the attainment of the equilibrium stage.

TABLE 35

AMMONIA EQUILIBRIUM (Haber)

Pressure = 1 atmosphere absolute.

Temperature ° C.	Volume per cent of Gases.		
	NH_3	H_2	N_2
27	98·51	1·12	·37
327	8·72	64·46	22·82
627	·21	74·84	24·95
927	·024	75·0	25·0
1020	·012	75·0	25·0

This table shows clearly that the temperature of the system has a great influence upon the ammonia yield, which decreases very rapidly with an increase in temperature, and above 600° C. ammonia should be practically non-existent for mixtures of established equilibrium conditions.

In actual producer gas practice we are not dealing with a gaseous mixture of only nitrogen, hydrogen, and ammonia, since these gases are diluted with other gases. Thus, for instance, when gasifying an average English bituminous coal (yielding about 90 lbs. of sulphate per ton) we should have the following approximate volume concentration of these gases :—

NH_3 = 0·4 to 0·5 per cent.
H_2 = 20 ,, 25 ,,
N_2 = 44 ,, 48 ,,
Other gases = remainder.

This shows that the volume ratios of the gases involved in the practical ammonia reaction are entirely different from those referred to in Table 35 as the equilibrium volumes.

To understand the effect of alteration in the volume of either of the gaseous components involved in the ammonia reaction it will be necessary to study separately what effect an alteration of the concentration (or partial pressure) of either the hydrogen or the nitrogen will tend to have upon the amount of ammonia obtained. Given a constant thermodynamic environment and established complete equilibrium, we may write the formula of the dissociation constant "K" as follows :—

$$K = \frac{[N_2]^1 \times [H_2]^3}{[NH_3]^2},$$

in which the symbols inside [ ] indicate the volume concentrations of the three gases involved in the dynamic equilibrium.

The effect of increasing either the hydrogen or the nitrogen concentration only would cause a tendency for the ammonia content to increase; but whereas an increase in the nitrogen affects the ammonia content as the square root of the increased nitrogen volume, an increase in the hydrogen content will alter the ammonia concentration at the power of $\frac{3}{2}$. Decreases in the nitrogen and hydrogen content obviously would have the opposite tendency.

It will be plain that in practice, where temperatures above 600° C. are used, there is always very much less hydrogen present in the gases than that which corresponds to the equilibrium concentration; but nevertheless the ammonia yield is not decreased to an amount which corresponds to the amount in equilibrium with this modified hydrogen concentration. The main cause for this difference is probably due to the fact that the *rate* of decomposition of ammonia into its constituents is a very low one, there being nothing like sufficient time given for the equilibrium stage to be obtained under practical working conditions.

Table 36 shows (Bodenstein and Kranendieck [1]) the rate of change in the ammonia concentration $\frac{dx}{dt}$ after the expiry of varying lengths of time, when heating initially pure ammonia gas at 780° C. and 880° C. respectively :—

TABLE 36

RATE OF DECOMPOSITION OF AMMONIA

Time in minutes.	Temperature = 780° C.				Temperature = 880° C.			
	P_{NH_3} = 145 mm. Hg.		P_{NH_3} = 235 mm. Hg.		P_{NH_3} = 225·5 mm. Hg.		P_{NH_3} = 614·6 mm. Hg.	
	N_2+3H_2 mm. Hg.	$\frac{dx}{dt}$	N_2+3H_2 mm. Hg.	$\frac{dx}{dt}$	N_2+3H_2 mm. Hg.	$\frac{dx}{dt}$	N_2+3H_2 mm. Hg.	$\frac{dx}{dt}$
0	0	0	0	0	0	0	0	0
5	46·4	4·65	48·8	4·9	60·0	6·0	100	10
10	69·6	2·3	81·0	3·2	115·1	5·4	197·9	9·8
15	84·4	1·48	102·2	2·12	..	..	283·0	8·4
20	94·3	1·0	119·9	1·78	196·7	4·0	352·8	7·0
100	157·1	·25	226·4	·36	..	..	769·4	1·2

The symbol P_{NH_3} indicates the initial pressure of ammonia, while the column N_2+3H_2 indicates the amount of N_2+3H_2 formed as obtained by the observed pressure increase in mm.

Even after the expiry of 100 minutes it will be seen that no complete dissociation of the ammonia has taken place. The table further shows how the rate of decomposition decreases with the concentration of the ammonia. Since the average time contact factor in by-product gas producers hardly exceeds five seconds it will thus be clear why the ammonia formed is not decomposed again.

Since there is generally more ammonia in by-product producer gas than corresponds to the equilibrium quantity at the temperature of formation, the obvious question is : How is the ammonia formed ? Considerable research has been carried out upon this subject, especially as to the action of various gases upon the amount of ammonia formed.

It has long been known that steam is the most suitable agent for the formation of ammonia, the first experiments being made about forty years ago by Grouven in Germany, and Young, Ramsey, and Beilby [2] in Britain.

Table 37 serves as an example of results obtained by passing steam only over coke (remaining after a three-hour previous distillation of the coal), for varying lengths of time at different temperatures :—

[1] Nernst, *Festschrift*, 1912, p. 99.

[2] *Journ. Soc. Chem. Ind.*, 1884.

TABLE 37

PERCENTAGES OF NITROGEN IN FUEL OBTAINED AS AMMONIA BY STEAMING OF COKE

	Length of time in hours.	Temperature of Coke ° C.			
		600°.	700°.	800°.	900°.
Dry distillation only	3	10·83	19·17	21·38	20·57
Steam only	6	13·04	20·85	23·12	23·84
	9	3·17	8·53	9·64	5·35
	12	1·84	5·10	6·12	2·21
	15	·17	3·17	3·71	..
	18	..	1·50	2·14	..
	21	..	..	1·12	..
Total amount of ammonia in per cent of nitrogen in coal	..	**29·05**	**58·32**	**67·23**	**51·97**

This table indicates that the longer the steaming is carried out the higher is the ammonia yield, and further, that the ammonia yield is highest at 800° C. The time during which the steam and coke were in contact does not seem to have been borne in mind, nor what was the coke residue at the end of the test.

Salmang [1] on gasifying coke under different conditions comes to various conclusions, of which the following is a summary :—

(*a*) By gasifying coke by carbon dioxide, CO_2, the quantity of nitrogen in the coke obtained as ammonia is only 2 to 3 per cent when using dried CO_2, and 17 per cent when using undried CO_2. Since the hydrogen contained in the coke sufficed to combine to ammonia with four times the amount of nitrogen that was present, the hydrogen in the coke does not partake in the ammonia formation, but steam is the ammonia-forming agent.

(*b*) The ratio of carbon to nitrogen in the coke remains practically the same at the various stages of gasification. In other words, the nitrogen probably exists as a very stable nitride equally distributed throughout the whole coke mass.

(*c*) The decomposition of the ammonia is retarded considerably by the presence of steam.

(*d*) The addition or presence of various oxides or salts affects the formation of the ammonia. Thus the addition of 5 per cent calcium carbonate to the coke resulted in a great increase in the ammonia ; similarly if ferric oxide, Fe_2O_3, is added. For coked residues having high ash and sulphur content, the addition of $CaCO_3$ caused an extremely marked increase in the ammonia yield.

[1] Aachen, 1914, Dissertation.

Salmang also made experiments with steam quantities, as much as 10 kg. per kg. of fuel treated; such experiments are, however, not likely to have any bearing upon practice. Also in these tests it would appear that the rate of coke gasification and time of contact between gases and coke were not given as careful consideration as the other factors.

In connection with Salmang's conclusion (*a*) it should be borne in mind that CO_2 is just as much an endothermal agent as steam, therefore since the only products of gasification of coke by steam that differ from those made by CO_2 are hydrogen and steam (undecomposed), either the steam or the hydrogen must be the ammonia-forming agent. The explanation at the moment, generally accepted, is that the *nascent* hydrogen (formed by the decomposition of the steam) has a greater affinity for the nitrogen than hydrogen in any other condition.

Professor Cobb [1] in collaboration with Monkhouse [2] has carried the research of Salmang a step further, while at the same time endeavouring to obtain somewhat similar time contact and gasification rate conditions to those existing in practice.

Tables 38 and 39 give a summary of Monkhouse and Cobb's tests, which show the effect upon coke (made at different temperatures) of passing through it a current of nitrogen, hydrogen, and steam, separately or successively, or two of these simultaneously. The time contact factors varied approximately between two and six seconds, depending upon the temperature of experiment, and whether only one gas or a gas mixture was passed through the coke.

TABLE 38

EFFECT OF COKE QUALITY UPON PER CENT YIELD OF NITROGEN IN COKE AS AMMONIA WHEN HEATED IN VARIOUS GAS CURRENTS SUCCESSIVELY TO 500, 800 AND 1100° C.

Coke made at	500° C.		800° C.		1100° C.	
Type of Gas Current . .	Nitrogen.	Hydrogen.	Nitrogen.	Hydrogen.	Hydrogen.	Hydrogen and Steam.
Nitrogen as ammonia .	**11·7**	**34·2**	**·3**	**3·9**	**Nil**	**5·7**
Nitrogen left in coke .	60·4	28·2	70·2	59·0	100	87·9
Free nitrogen (difference)	27·9	37·6	29·5	37·1	Nil	6·4

The coke made at 500° C. was soft, the 800° C. coke medium hard, while the 1100° C. coke was extremely hard. The figures in Table 38 indicate—

That with the softer (less carbonized) coke the hydrogen current favours the formation of ammonia more than the nitrogen current. With the medium hard coke this influence upon the ammonia formation, although relatively the same,

[1] Cobb, *Young Memorial Lecture*, 1918.
Monkhouse and Cobb, *Gas Journal*, October 19, 1921.

nearly ceases, while with the hard coke it is entirely absent. It is also worthy of note that when steam was added to the hydrogen current passing over the hard coke a steady evolution of ammonia took place, which evolution was not completed at the end of the experiment.

TABLE 39 (Monkhouse and Cobb)

EFFECT OF CONVERSION OF NITROGEN FROM SOFT (500° C.) COKE INTO AMMONIA AT 800° C. BY SUCCESSIVE TREATMENT BY VARIOUS GAS CURRENTS

Test No.	1.	2.	3.	4.	5.
Gas Current	Nitrogen only.	Nitrogen and Hydrogen successively.	Nitrogen + Hydrogen and Steam + Nitrogen successively.	Nitrogen only.	Nitrogen and Steam successively.
Per cent nitrogen as ammonia	**10·1**	**41·1**	**79·2**	**10·7**	**80·3**
Per cent nitrogen left in coke	70·3	38·3	Nil	69·7	Nil
Per cent free nitrogen (difference)	19·6	20·6	20·8	19·6	19·7

Table 39 also confirms that steam is the ammonia-forming agent. It was further found that ammonia was formed from the coke throughout the whole period of gasification to the ash stage. The amount of steam used corresponded to the gases being saturated at 87° to 88° C.

A most important point, which is not evident from Table 39, is that the *rate of evolution* of ammonia was very much faster in the case of Test 5 than Test 3, the only difference between these two tests being that the hydrogen treatment stage was eliminated in Test 5. The actual effect of the more early application of the steam will be clearer by studying the two curves in fig. 20.

The time for evolving practically all the ammonia possible in the two cases after preliminary action of nitrogen was: *direct steaming* as per Test 5, *about* 40 *hours*, *successive* hydrogenating and steam as per Test 3, about 230 hours.

In both cases the coke was gasified completely when the steaming was completed, and therefore the tests do not give an idea as to the *minimum* time required for efficient ammonia evolution, but, as will be seen later, the time of treatment of the fuel particles (intensity of gasification) plays an important rôle in the economical production of ammonia.

We may now *summarize* the effect of the various factors likely to affect ammonia formation by coke gasification (at our present state of knowledge) by saying :—

(1) The nitrogen in the coke is in a very stable state and under gasification conditions favourable for ammonia formation the nitrogen is gasified jointly with the coke.

(2) The admission of steam is a *sine qua non* of converting

the nitrogen in coke into ammonia, probably the nascent hydrogen formed by the decomposition of the steam combines with the nitrogen in the coke to form ammonia.

(3) The mineral constituents of the coke affect the conversion of the nitrogen into ammonia.

(4) The nature of the coke affects the rate of ammonia forma-

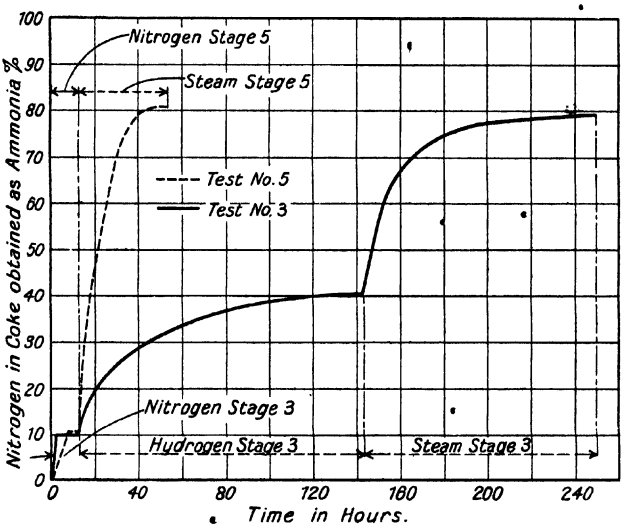

FIG. 20.—RATE OF EVOLUTION OF AMMONIA FROM COKE.

tion, thus the length of time required to complete the formation of the ammonia from a certain coke should be borne in mind.

(5) The amount of ammonia formed by gasification is not in stable equilibrium, at the temperature of formation, with the nitrogen and hydrogen; it is prevented from decomposition mainly on account of the slowness of this action.[1]

(c) *Formation of Ammonia in Gas Producers*

The gasification of a volatile fuel progresses gradually as the fuel travels through the gas producer, and thus there is no distinct separation between the nitrogen evolution in the volatile matter zone and in the coke zone, which merge more or less into one another. The conclusions arrived at in the preceding pages regarding the formation of ammonia during the evolution of the volatile matter and the gasification of the coke can nevertheless be applied directly to the continuous gasification of a fuel in a producer. It therefore only remains for us to consider

[1] Since preparing the manuscript for the above the works of Greenwood and Hodsman (*J.S.C.I.*, Aug. 15, 1922) and Mott and Hodsman (Jan. 5, 1923) upon the dissociation of ammonia have been published.

the results of ammonia yields obtained in actual gasification practice, as well as the economical aspect of the ammonia formation by means of steam.

The only works research regarding the effect upon the ammonia yield of varying the steam quantity introduced into the producer was carried out by Professors Bone and Wheeler,[1] whose results of testing a Mond producer are referred to in Table 40 below, and used as a basis in the preparation of the curves in fig. 21.

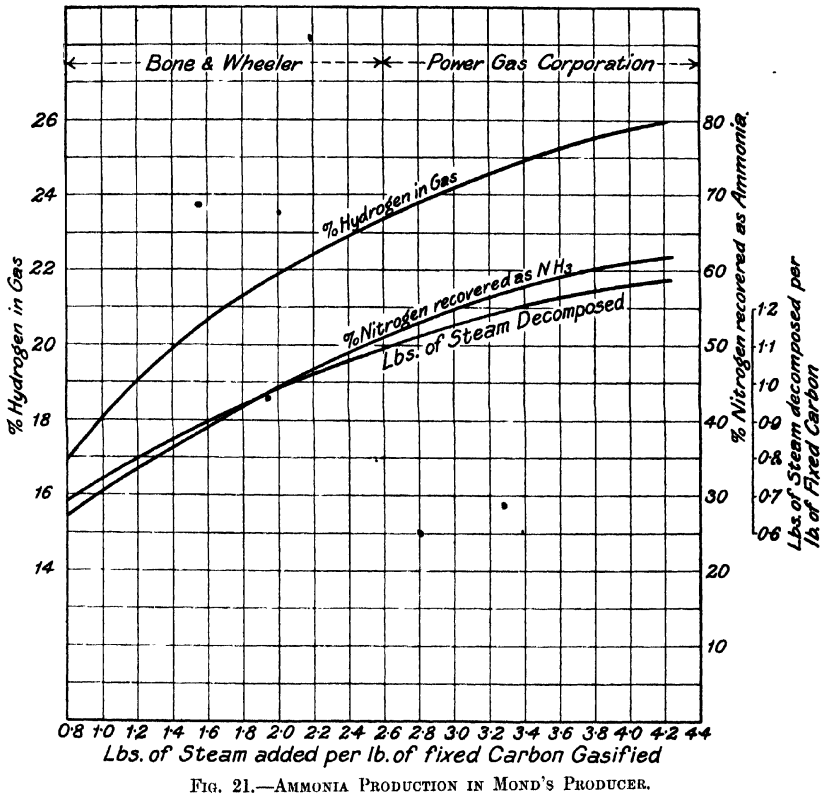

FIG. 21.—AMMONIA PRODUCTION IN MOND'S PRODUCER.

Using the steam quantity applied as abscissae three curves have been plotted which show the variations in (1) the yield of the nitrogen in the fuel as ammonia, (2) the volume percentage of hydrogen in the final gas, and (3) the total quantity of steam decomposed. The steam quantity used or decomposed has been expressed as lbs. of steam per lb. of *fixed carbon* gasified, which is a more justified denomination than the usual method of referring the steam quantity to the unit weight of *coal* since the steam in the producer reacts with the fixed carbon and fixed nitrogen respectively and generally not with the "volatile" constituents of the fuel.

[1] Bone and Wheeler, *Journal of Iron and Steel Inst.*, No. 1, 1907.

TABLE 40

AMMONIA PRODUCTION IN GAS PRODUCERS

Type of Producer.	Test made by	Saturation Temperature of Air Blast °C.	Per cent by Volume of Hydrogen in Final Gas.	Approximate Time Factor in Seconds.	Lbs. of Steam per lb. of Fixed Carbon gasified.		Steam decomposed in per cent on Steam added.	Per cent Nitrogen in Fuel.	Lbs. of Pure Sulphate of Ammonia made per ton of Coal.	Per cent of Nitrogen in Coal obtained as Ammonia.
					Added.	Decomposed.				
Mond	Bone and Wheeler	60	16·6	2·1	·77	·672	87·4	1·39	39·0	**26·5**
		65	18·3	2·1	·94	·752	80·0	1·39	44·7	**30·4**
		70	19·65	1·9	1·37	·84	61·4	1·39	51·4	**35·0**
		75	21·8	1·8	1·88	·977	52·0	1·39	65·25	**44·4**
		80	22·65	1·7	2·64	1·056	40·0	1·39	71·8	**49·0**
Mond	Power-Gas Corporation	85	26·0	1·45	4·24	1·27	30·0	1·4	90·0	**61·5**
Low temperature producer	Power-Gas Corporation	78	21·5	3·5	2·55	1·58	62·0	1·45	95·0	**60·0**
		75	20·5	more than 5	1·75	1·58	90·0	1·45	90·0	**57·5**

From the curves it will be seen that the quantity of nitrogen recovered as ammonia increases with the hydrogen content of the gas and with the quantity of steam decomposed, which confirms previous research upon the effect of the steam upon coke. Since, however, the amount of nitrogen recovered also includes for the "volatile" ammonia in the fuel, the actual effect of an increased steam quantity upon the ammonia yield is larger than is directly evident from these curves.

[1] Messrs. Bone and Wheeler's results are very typical so far as the relative effect of varying the steam quantity in a *given* gas producer is concerned; but as soon as the producer design is altered the conclusions which have been drawn in the past from these tests are no longer applicable. Other points to be borne in mind are especially the time factor and the rapid cooling of the ammonia formed.

To show especially the effect of an increasing time of contact between gas and fuel, Table 40 has been prepared.

From this it will be seen that if a longer time contact is given (which also means slow gasification of each fuel particle) much higher ammonia yields can be obtained for such low steam quantities as used by Messrs. Bone and Wheeler in their test on the Mond producer. It will be further realized

[1] Rambush. West of Scotland Iron and Steel Institute, Session 1922–1923.

that the ammonia yield when using less than half the quantity of steam used in the Mond process remains unaltered so long as the time factor is suitably increased.

Since in the last two tests referred to in Table 40 the quantity of *un*decomposed steam is less than for the corresponding blast temperatures employed by Messrs. Bone and Wheeler in their tests it is clear that the protecting action of the presence of large quantities of undecomposed steam is not as essential a factor in the ammonia formation as has often been maintained by various past investigators.

From a commercial point of view it is obviously of great value that it is possible to obtain the same quantity of ammonia by using a considerably smaller steam quantity than has hitherto been the case, for ammonia can then be recovered from a fuel without any extra heat having to be expended in supplying steam in excess of that generally used in gas producers which are worked without ammonia recovery.

Considerable research regarding the effect of the time factor upon the ammonia yield has been carried out by the Power-Gas Corporation Ltd., Stockton-on-Tees, during the last four years. Two of the results which have been obtained by this firm are referred to in Table 40.

The effect of rapidly cooling the gas after the formation of the ammonia has been investigated by Sachs,[1] who nearly doubled the ammonia yield by rapidly chilling the gases as they left the hotter zones. This is a most important point, which is not always borne in mind in practice, mainly because an effective chilling is difficult to arrange for in the plant. It has been claimed that this chilling can be effected in the Moore by-product producer (p. 291), and doubtless this is a justifiable claim, although complete chilling cannot always be thus achieved.

A further method whereby the ammonia yield can be increased is by mixing lime with the fuel. Hollingshead and Chadwick[2] have proved from several years' operation on a Mond by-product producer plant, where 1 to 2 per cent slaked lime was added to the coal, that it is possible to increase the ammonia yield by more than 15 per cent without any other modification in the normal method of operating a Mond plant. The exact effect of the lime upon the coal may be an earlier liberation of the fixed nitrogen, or it may be that the lime fixes such acid gases as chlorine in the producer, whereby the ammonia is more easily recovered from the gas.

Too much lime can be added, since the ash then becomes too fusible, and for this reason the quantity which it is most economical to add to a particular fuel will depend upon the fusibility of the ash in the latter.

In addition to the conclusions mentioned on pp. 84 and 89 we may summarize the factors that affect a high ammonia yield in a gas producer, as :—

(1) The quantity of steam required is greater the lower the time factor.

(2) A quick cooling of the gases containing ammonia should be effected.

(3) The addition of lime within limits should be carried out wherever possible.

NOTE.—The ammonia on a by-product producer gas plant is generally recovered as ammonium sulphate, and hence it is customary in practice to express the ammonia yield in unit weight per ton of fuel gasified, *e.g.* lbs. of sulphate per ton of coal gasified.

[1] K. Sachs, Diss., Karslruhe, 1913.

[2] British Patent No. 16,168, 1911.

A better way for comparative purposes of expressing the ammonia yield is to state the percentage of the nitrogen in the fuel which is recovered as ammonia.

To enable a quick comparison of these two methods of stating the ammonia yield the curves of fig. 22 have been drawn. On this the nitrogen content of the fuel has been plotted as abscissae against lbs. of sulphate yielded per ton of coal as ordinates, while

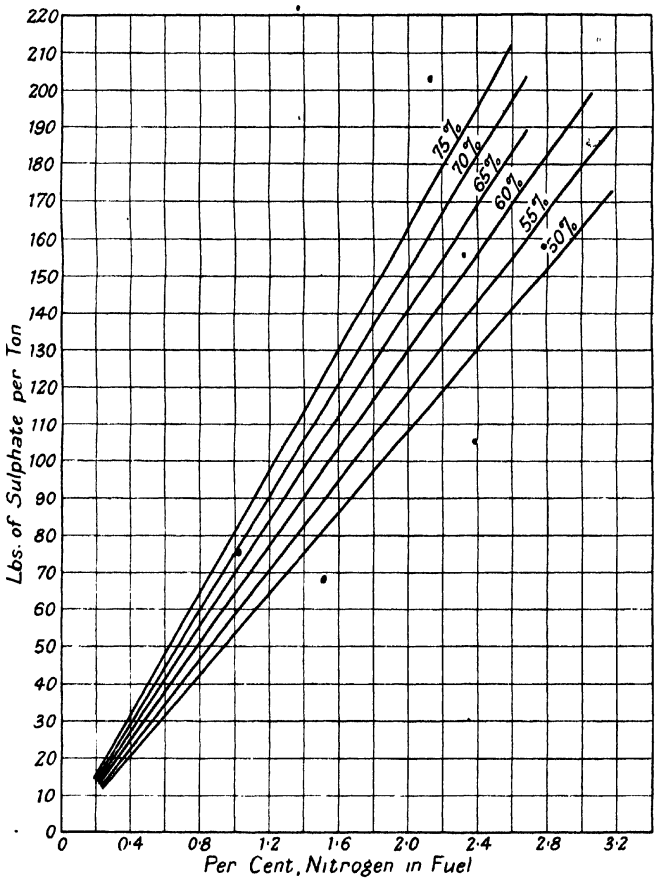

FIG. 22.—NITROGEN RECOVERY EFFICIENCY AND AMMONIA YIELD.

a series of lines have been drawn to cover the range of the nitrogen recovery efficiency generally met with in producers (from 75 to 50 per cent).

Since the Sales Market for ammonium sulphate nowadays demands as a standard that the ammonia content in the sulphate shall not be below 25 per cent, and since the sulphate made in practice is never obtained in a theoretically pure state (25·75 per cent NH_3), fig. 22 has been prepared for a sulphate containing 25 per cent of ammonia. It

will be thus clear that the "pure" ammonium sulphate yields in lbs. per ton will be about 3 per cent lower than those obtained from the curves.

To obtain the sulphate yield in kg. per metric ton the figures obtained from the curves for lbs. of sulphate per ton of coal should be divided by the factor 2·24.

2. Condensable Hydrocarbons and Carbohydrates such as Tar Oils, etc.

These bodies are derived from the volatile constituents of a fuel, and although modern fuel research still endeavours to solve that complicated and important problem "the constitution of a fuel," most present-day practical gas engineers would be quite content with an established standard method for determining what are the qualities and quantities of gas, tar, liquor, and coke that can be obtained from a certain fuel under working conditions, as well as a better guidance regarding the best use that can be made in industry of the various condensable bodies obtained during gasification and distillation. Each different fuel will yield products that are typical of its kind, but the bodies yielded will differ considerably, depending upon the temperature conditions under which these products are evolved, and removed from the fuel.

The last fifteen years' developments concerning coal treatment have shown that the properties and quantities of oils evolved from a certain fuel at low temperatures differ entirely from those evolved at high temperatures, the quantities, and probably also the commercial value, decreasing with an increase in the temperature of treatment.

To maintain the temperature of the fuel treatment so low as to yield the most valuable condensable hydrocarbons in low temperature retorts involves the construction of a cumbersome apparatus, which is not only expensive to build, but to operate. When it is borne in mind that gas producers can be so designed and operated that the fuel is gradually and slowly heated up by the utilization of the sensible heat of the gases from the lower part, it will be obvious that in such an apparatus we are likely to find ideal conditions for a low temperature fuel treatment *without any extra operating costs.*

These remarks are made in regard to the production of tar only from a fuel by either the one process or the other, although obviously the producer gas process leaves only ash as a residue against the coke from the retorting process.

It is a well-known fact that by distilling coal in retorts under vacuum, more valuable and lighter oils are obtained than when the distillation is carried out at ordinary pressures.

But what are the distillation conditions in a gas producer? The tarry vapour from the coal is evolved in a gaseous atmosphere at a very much smaller partial pressure than in distillation gas practice. For this reason it may perhaps be regarded as a reasonable contention that the tar obtained by distilling a fuel by direct contact with hot producer gas is likely to be more akin to "vacuum tar" than the tar which is obtained by distilling the coal by indirect heating.

The designs of various gas producer types in which low temperature treatment

of fuels is aimed at are described on pp. 294-313. At the present stage we are only concerned with a general survey as to the quantities and types of liquid hydrocarbons and carbohydrates that we are likely to obtain from various classes of fuels by treatment at low temperatures, and what is the effect upon the quantity and quality of the condensates when the same fuel is treated in a gas producer.

The present state of the research upon the constitution of a fuel is generally looked upon as a closed book by the practical gas engineer. It is therefore in practice generally accepted that the best means to judge the " tar "-making quality of a certain fuel is a distillation test of the fuel. In the following we shall therefore see what products are likely to exist in and can be commercially recovered from the condensate obtained by the distillation of various fuels. Whereas the nature of the condensable distillation products alters with the nature of the fuel, no such rule can be laid down as to the quantity.

The origin of all fuels is vegetable matter, mainly the cellulose of various plants, in addition to certain waxes, resins, and other bodies of vegetable origin; the cellulose, however, being the main constituent.

The result of *distilling* various types of *cellulose* is given in Table 41, as well as the results of distilling rice-starch and sugar.[1] From this table we find that the acetic acid, aldehyde, and ketone yields do not vary to anything like the degree that the tar yield does. Sugar especially shows a very great difference from the other bodies, although its composition by chemical analysis is the same as both cellulose and starch, viz. $X(C_6H_{10}O_5)$.

TABLE 41

WEIGHT PERCENTAGES (ON DRY SUBSTANCE) OF PRODUCTS BY DISTILLING TO 500° C. VARIOUS MATERIALS OF VEGETABLE ORIGIN

Research by	Klason, Heidenstam, Norlin.					Bantlin.		
Distillation Products	Cotton.	Cellulose made from various Woods.				Cellulose.	Rice-starch.	Sugar.
		Pine Wood.	Fir Wood.	Birch Wood.	Beech Wood.			
Charcoal residue	38·82	36·93	34·86	33·39	32·91	32·97	28·6	12·2
Water	34·52	34·17	29·99	29·35	31·88	31·67	29·7	6·29
Tar	**4·18**	**4·85**	**6·28**	**9·58**	**5·23**	**3.25**	**2·69**	**55.04**
Acetic acid	1·39	2·18	2·79	3·89	3·50	3·28	5·29	8·78
Aldehydes	5·14	4·22	8·50	7·72	8·67	5·82	5·66	6·15
Ketones	·07	·08	·13	·15	·26	·11	1·11	·34
Gases	14·84	16·71	16·27	15·48	16·40	17·33	22·7	5·96
Tar evolution range ° C.	..	..	..	..	..	170 to 300	210 to 350	250 to 370

Bantlin, *J. f. Gasbel.*, January 10, 1914.

Bantlin further examined the elementary composition of the tars from the cellulose, starch, and sugar, with the result given in Table 42.

TABLE 42

ANALYSIS OF CELLULOSE TARS (Bantlin)

	Tar made from		
	Cellulose.	Starch.	Sugar.
Carbon	52·20	45·02	38·91
Hydrogen . . .	6·86	6·31	6·19
Oxygen	40·94	48·67	54·90

It is, of course, clear that cellulose is not a material that is likely to be used as a commercial fuel for gasification, but since it is the main constituent of wood it is thought that the statements given will be of more than theoretical interest.

Table 43 shows results of distilling various kinds of *woods*, as reported by the Imperial Institute, typical among which results is the high tar yield from pitch pine, the most resinous of the woods referred to.

TABLE 43

RESULTS OBTAINED BY DISTILLATION OF VARIOUS TYPES OF WOODS
(*Bulletin of Imperial Institute*)

	Average Results of small scale Trials made at Imperial Institute, London.				Factory Distillation Results with Oak Wood.
	Pine Wood.	Olive Wood.	Black Wattle.	Oak Wood.	
	Per cent.	Per cent.	Per cent.	Per cent.	Per cent.
Charcoal . . .	29	29	27	25	26
Tar separated . .	**12·9**	**7·4**	**6·0**	**6·4**	**4·5**
Acetic acid . .	2·2	3·0	4·7	4·4	3·8
Methyl alcohol .	·6	1·6	1·2	1·1	1·1

Woods and waste materials of vegetable origin are available all over the world for gas-making purposes, but, as was also apparent from the cellulose distillation products, no rule can be laid down regarding the likely yield of possible by-products without testing the actual vegetable fuel to be used.

TABLE 44

RESULTS OF DISTILLING TAR FROM VARIOUS PEATS

Type of Peat.	Moisture Content of Peat per cent.	Tar.		Per cent Composition of Tar.				Asphalt or Pitch.	Creosote and Loss.
		Yield.	Specific Gravity.	Light Oils.	Heavy Oils.	Paraffin.			
						Oils.	Wax.		
1. Hard dark brown peat	33·6	4·9	..	8·9	22·56	39·7	..	22·6	6·21
2. Brown soft peat	36·2	5·19	..	7·32	21·66	46·0	..	12·77	12·22
3. Black peat (Bavarian)	19	4 to 5	..	..	..	..	..	..	..
4. Light yellow-brown peat (Holstein)	?	2·34	..	..	..	..	..	..	..
5. Heavy close peat (Holland)	Air-dry	6·7	·98	11·44	12·21	..	1·7	55·19	19·46
6. Heavy close peat	Dried	10·73	..	..	..	..	..	..	..
7. Hard black peat (Australia)	8·6	2·7	..	6·1	68·9		..	23	..
8. Hard dense Irish peat	17	9·4	·986	74			6·5	26	..

In Table 44 eight results of *peat* tars have been tabulated. 1-6 are given by Hausding,[1] 8 by the Fuel Research Board (1921), and 7 obtained by the author. It will be seen that the physical properties of a peat, such as colour and density, are by no means a guide as to the tar yield which can be obtained.

TABLE 45

CARBOHYDRATES OBTAINED FROM LIQUOR CONDENSATE FROM PEAT DISTILLATION

	Peat 5 and 6.		Peat 8.	
	Lbs. per ton.	Kg. per 1000 kg.	Lbs. per ton.	Kg. per 1000 kg.
Acetic acid	13·4	6·0	7·5	3·35
Higher fatty acids	1·8	·8	..	..
Methyl alcohol	6·5	2·9	1·44	·64
Acetone	..	..	1·14	·51

Peats yield a smaller quantity of carbohydrates of the saturated paraffin series than in the case of woods; see Table 45, which refers to the fatty alcohols, acid, and ketone yields obtained from distilling two of the peats in Table 44.

[1] Hausding, *Torfgewinnung und Torfverwertung*, Berlin, 1917.

Peat Tars obtained in actual Gas Producer Practice

A *Hannoverian* peat of the following approximate analysis treated in a Mond gas producer yielded 1 per cent dry tar :—

Moisture content		35 per cent.
On dry fuel	Volatile matter	54·6 ,,
	" Fixed carbon "	37·4 ,,
	Ash	8·0 ,,

After dehydration the tar, which contained 33 per cent of moisture, was distilled with the following result :—

Fraction up to 170° C.	1·5 per cent	(pale yellow oil).
170°-230° C.	4·4 ,,	(light brown oil).
230°-270° C.	13·4 ,,	(red brown oil).
above 270° C.	57·0 ,,	(red brown fatty substance).
Pitch	20·7 ,,	(hard).
Loss	3·0 ,,	

An *Italian* peat of the following analysis when gasified in a similar producer yielded 6·8 per cent of wet tar as a sales product :—

Moisture content		15 per cent.
On dry fuel	Ash	22·5 ,,
	Volatile matter	49·5 ,,
	" Fixed carbon "	28·0 ,,

The tar contained about 12 per cent moisture, and was sold in two grades :—

Light tar	28 per cent.
Heavy tar	72 ,,

Stansfield, Gilmore, and others [1] report upon the effect of distilling a Canadian (Shand) *lignite* at various temperatures, rates of heating, and distillation methods.

The analysis of the lignite was as follows :—

Moisture content		32·6 per cent.
On dried substance	Ash	12·5 ,,
	Volatile matter	39·2 ,,
	Fixed carbon	48·3 ,,
	C.	62·5 ,,
	Hydrogen	3·9 ,,
	S + N + O	21·1 ,,
	Heating value :	
	Cals./kg.	5,690
	B.T.U./lb.	10,240

[1] Sessional paper No. 26*a*, Department of Mines, Canada, 1919.

Table 46 gives their results as to the examination of the tar produced by various methods of treatment, viz. rapid or slow heating of either dried or crude fuel in a retort placed in a lead bath, or rapid heating without a lead bath.

TABLE 46

TAR RESULTS—SHAND LIGNITE CARBONIZATION

Temperature ° C.	Crude Tar Oil.			Dried Tar Oil.			
	Tar Yield per cent.	Water Content.	Density.	Yield per 2000 lbs. Dry Coal.	Calorific Value B.T.U. per lb.	Distillation Results.	
						Up to 310° C.	Pitch Residue.
	Per cent.	Per cent.		Gals.		Per cent.	Per cent.
Rapid heating:							
350	**1**	..	..	..	..	..	..
400	**2·9**	1·5	0·98	6·0	17,260	60·9	38·1
475	**4·2**	7·7	0·99	7·9	17,250	55·6	42·9
555	**4·1**	9·4	1·00	7·5	17,040	64·2*	34·7*
605	**4·2**	3·3	1·00	8·1	17,030	53·7	43·4
690	**3·9**	5·2	1·00	7·3	16,970	65·2	32·5
Rapid heating, no lead bath:							
750-800	**3·7**	22·8	1·01	5·8	17,100	42·6	57·1
Rapid heating, dried coal:							
550	**3·4**	2·3	0·97	6·9	17,410	58·6	40·7
Rapid heating, dried coal, no lead bath:							
750-800	**3·0**	31·0	0·98	4·6	17,130	42·0	56·5
900-950	**3·0**	31·3	0·99	4·2	17,280	40·5	58·7
Slow heating:							
450	**4·3**	9·6	0·99	7·8	17,110	62·7	36·2
550	**4·5**	1·8	0·99	8·9	17,020	60·5	38·3
655	**4·0**	6·6	0·99	7·6	17,560	60·0	38·5

* Cut at 325° C.

Very little tar is given off below 350° C., and the highest tar yields were obtained by slow heating of the crude fuel to about 550° C., although the results by rapid heating are not very much less; furthermore, slow heating would appear to yield a lighter tar. On the other hand, rapid heating to higher temperatures than 600° C. decreases the yield of tar considerably. This is also the case when distilling the previously dried fuel.

In fig. 23 is shown in a diagrammatic way the amount of volatile matter driven off and the calorific value of the carbonized residue, when distilling the fuel samples at various temperatures under the following physical conditions :—

1. Regular carbonization (1½ hours' duration).
2. Carbonization under vacuum (25 mm. mercury).
3. Carbonization under pressure (maximum 120 lbs. per sq. inch).
4. Slow carbonization.
5. Carbonization with additional steaming.

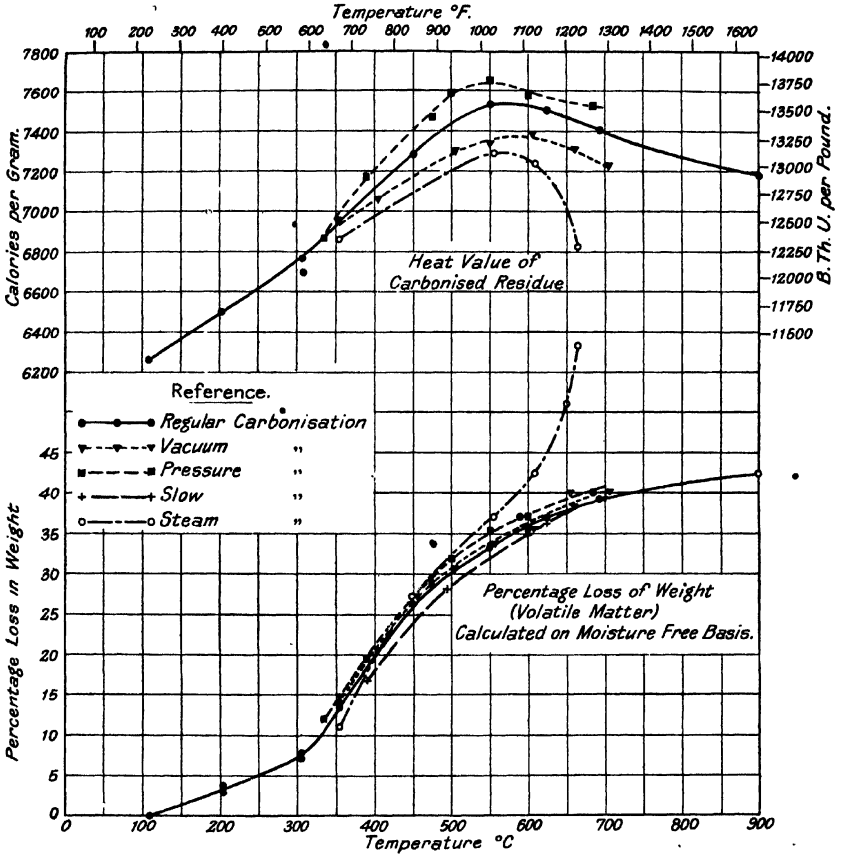

FIG. 23.—RESULTS OF CARBONIZATIONS OF LIGNITE BY VARIOUS METHODS.

It will be seen how very closely the various curves follow one another, except the curve obtained under steaming conditions (due probably to the partial gasification by the steam of the carbon in the fuel). Interesting as these tests are, it is to be regretted that no research was made as to the qualities of the various distillation products obtained by the different methods of distillation.

Benson and Cinfield [1] distilled a *lignite* from Newcastle, U.S.A., of the following analysis :—

Moisture	12·1 per cent.
Ash	10·41 ,,
Volatile matter	36·8 ,,
Fixed carbon	40·7 ,,
Sulphur	0·34 ,,
Nitrogen	1·37 ,,
Calorific value	10,410 B.T.U./lb.,

which on distillation to various final temperatures gave the tar results given in Tables 47 and 48.

TABLE 47

TAR RESULTS FROM DISTILLING AMERICAN LIGNITE AT VARIOUS TEMPERATURES

Final Temperature of Coal Distillation.	Liquor Condensate per cent on Coal.	Dry Tar per cent on Coal.	Distillation Products of Tar in per cent.						
			Oils.			Paraffin.		Coke.	Loss.
			To 150°.	150°-300°.	Above 300°.	Hard.	Soft.		
150	6·9	..	..	..	..	..	..	..	..
200	8·7	·5	..	..	..	..	..	..	..
250	15·2	1·9	10·3	42·1	33·1	3·9	1·3	9·6	4·9
300	15·5	2·8	10·7	42·5	33·4	5·0	1·8	10·0	3·4
350	16·3	**3·5**	**11·3**	**41·9**	**33·9**	**5·5**	**2·1**	**9·7**	**3·2**
400	15·7	3·2	10·5	41·7	33·2	5·2	1·9	10·3	4·3
450	15·9	2·8	9·3	41·4	31·4	3·4	1·5	13·6	4·3
500	15·4	2·3	7·8	41·5	29·8	2·1	1·4	15·9	5·0
550	15·5	1·6	5·9	41·2	29·2	·9	·7	17·6	6·1
600	15·1	1·0	3·9	40·9	27·8	·6	·5	21·1	6·3

Table 47 gives the various yields of tar and liquor condensate in per cent on the coal, as well as the analysis of the tar by distillation to the coke stage.

Table 48 gives the specific gravities of the oil fractions obtained by the distillation of the tar as per Table 47.

Of special interest in these tests is the fact that between the temperatures 350° to 400° C. a decomposition takes place of the tar-forming constituents of the volatile matter of this particular fuel.

A maximum tar yield of 3·5 per cent is obtained at 350° C., while tar evolution

Journal Ind. and Eng. Chem., 1920.

is practically absent below 200° C. A somewhat extraordinary point about the tests is that the presence of the cyclic bodies, benzene, toluene, and solvent naphtha, was claimed to have been proved in the light oils, and further, that both naphthalene and anthracene were present in the oil fractions between 150° and 300° C. This, as will be seen later, is not the case with low temperature tar from an ordinary bituminous coal, which generally shows a paraffinoid character and is typical in the absence from it of naphthalene and most other cyclic bodies. A *soft pitch* only

TABLE 48

SPECIFIC GRAVITY OF TAR OIL FRACTIONS IN TABLE 47

Temperature ° C.	Oil Fractions.		
	To 150°.	150°-300°.	Above 300°.
250	·807	·905	·939
300	·815	·908	·950
350	·812	·915	·957
400	·815	·926	·968
450	·816	·935	·966
500	·816	·938	·978
550	·818	·946	·983
600	·821	·955	·985

could be obtained from the tars which were produced by the distillation of the fuel above 500° C. This experience is not contradictory when the property of the pitch made from many low temperature coal tars is considered.

Neither of the two American lignites referred to in the preceding contains a large quantity of tar-yielding bodies, but that this is not a specific property of lignites will be clear from the results obtained [1] by distilling three Bosnian *brown coals* as per Table 49. In this table is stated not only the composition of the tar as obtained by fractional distillation, but also the results of separating the tar in a chemical respect into its various main constituents, which, at the present stage of incomplete knowledge of the composition of low temperature tar oils, is probably the better way to enable us to judge the commercial value of a tar.

The tar-yielding properties at low temperatures of *ordinary bituminous coal* have been investigated by many researchers, amongst whom may be mentioned particularly Dr. Wheeler in England, Pictet in Switzerland, Parr and Olin in America, and the Institute for Scientific Coal Investigations in Germany.

The three first-mentioned researchers succeeded in obtaining oil condensates from bituminous coals approaching in nature those from crude petroleum oils; but since the test conditions were such as were not likely to prove successful in

[1] Strache and Dolch, *Mitl. d. Inst. f. Kohlenvergasung u Nebenp.*, November and December 1919.

commercial scale treatment, we shall not refer to their work otherwise than by saying that it has been the foundation stone of the more industrially successful work since carried out on the subject of low temperature treatment of coal.

TABLE 49

EXAMINATION OF TAR YIELD AND COMPOSITION FROM THREE BOSNIAN BROWN COALS, BY DISTILLATION, TO RED HEAT

Name of Coal	Kakanj.	Zenica.	Breza.
Fuel:	Per cent.	Per cent.	Per cent.
Moisture content	9·33	14·9	17·1
On moisture-free basis:			
Ash	8·6	24·1	22·8
Fixed carbon	52·1	32·2	39·6
Volatile matter	39·3	43·7	37·6
Nitrogen	1·06	·53	1·33
Tar:			
Yield per cent on dry coal	**12·1**	**9·52**	**8·7**
,, ,, pure coal substance	13·9	12·5	11·3
Moisture content	27·4	..	16·6
Fractional distillation of dry tar:			
Light oil	41·6	..	46·7
Heavy oil	16·4	..	25·3
Pitch	38·5	..	28·0
Loss	3·5	..	..
Result of chemical separation of tar:			
Creosotic bodies	20·4	18·0	25·3
Basic bodies	2·1	2·8	2·7
Asphaltic bodies	31·2	37·2	17·7
Paraffin	6·4	7·2	8·2
Neutral oil	15·0	14·9	10·2
Lubricating oil	24·4	20·5	32·1
Loss	·7	..	3·7

Tables 50 and 51 give results of distilling English and German coals at 600° C. maximum temperature, in the former case[1] in a small laboratory distillation

[1] Dr. T. Gray and J. G. King, Fuel Research Board (Tech. Paper No. 1).

apparatus (20 grammes capacity), and in the latter case [1] in a rotary retort of 45 lbs. coal capacity. Table 52 gives results of tar yields obtained by dry distillation of various coals at a rate of temperature increase approaching that in low-temperature gas producers.[2] The test results in each table have been arranged in accordance with the increasing content of the coked residue on the ash free and dry coal basis (" pure coal substance ").

TABLE 50

TAR YIELDS OF ENGLISH COALS

Coal Sample.	Coal Analysis.						Tar Oil yield per cent on Coal.	Temperature of first Oil Vapour °C.
	Moisture.	Organic Volatile Matter.	Fixed Carbon.	Ash.	Ash free Dry Coal			
					Volatile.	Coked Residue.		
1. Checkland Co., Ltd.: Coleorton house coal	9·98	35·84	50·04	4·14	**41·73**	58·27	**14·05**	380
2. Mapperley Colliery Co.: Mapperley small nuts	7·23	34·74	51·11	6·92	**40·47**	59·53	**11·8**	360
3. Rossington Main Colliery: Doncaster	4·71	29·09	44·32	21·88	**39·63**	60·37	**9·8**	350
4. Wentworth Silkstone Colliery, Barnsley: house coal	1·32	36·31	58·55	3·82	**38·28**	61·72	**15·8**	390
5. Wigan Coal and Iron Co.: Newcastle Main Manton hard steam	4·68	34·85	56·60	3·87	**38·12**	61·88	**15·2**	390
6. Clifton Colliery, Nottingham: Dalton Main	1·62	33·60	56·38	8·40	**37·34**	62·66	**14·06**	360
7. Rossington Main: Doncaster	6·37	33·40	56·26	3·97	**37·25**	62·75	**13·10**	350
8. Alloa Coal and Iron Co., Carnock Colliery, Bannockburn: Hartley coal	0·92	25·67	71·54	1·87	**26·40**	73·60	**9·85**	370
9. Nixon's Navigation Colliery: Nixon's large Welsh	0·88	12·92	83·16	3·04	**13·45**	86·55	**2·0**	400
10. Bwllfa Merthyr Dave Colliery: Bwllfa large Welsh	0·90	10·09	80·96	8·05	**11·08**	88·92	**1·1**	490

No absolute comparison can be made between the tar yielding results given in these three tables, since the methods of distillation differed considerably. All the same, we may perhaps draw the following conclusions :—

(1) Bituminous coals containing less than 15 per cent volatile matter (on pure coal substance) are not likely to yield so much tar that this can be regarded as a valuable by-product.

[1] Dr. F. Fischer, *Abhandlungen zur Kenntniss der Kohle*, 1918-1919.
[2] Rambush, *Soc. Chem. Ind.*, December 31, 1921.

TABLE 51

TAR YIELDS OF GERMAN COALS

Coal Type and District.	Raw Coal contains		Ash free Dry Coal contains		Dry Tar yield per cent on		Specific Gravity of Tar at		Phenol Content of Tar.
	Moisture.	Ash.	Volatile Matter.	Coked Residue.	Raw Coal.	Ash free Dry Coal.	25° C.	50° C.	
	Per cent.	Per cent.	Per cent.	Per cent.					
1. Cannel (Rheinland)	1·0	18·4	**56·1**	43·9	25·6	**31·8**	·952	·883	5-10
					29·7	**36·9**	..	·905	5-10
2. „ „	1·2	13·5	**46·2**	53·8	13·5	**15·8**	·96	·936	20
					15·6	**18·3**	..	·965	20
3. Upper Silesia .	12·79	8·41	**42·7**	57·3	6·1	**7·74**	..	..	40
					6·3	**7·99**	1·008	·99	40
4. Long flamed coal (Saar) . . .	7·8	1·8	**39·8**	60·2	7·2	**8**	1·022	1·005	40
					7·7	**8·5**	1·008	·99	35
5 Long flamed coal (Saar) . . .	2·0	2·3	**39·1**	60·9	11·5	**12·2**	1·006	·98	40
					12·5	**13·5**	1·014	·991	35
6. Upper Silesia. .	2·54	4 74	**38·5**	61·5	10·2	**11·0**	1·012	·992	30
					11·0	**11·86**	..	..	35
7. Lower Silesia. .	3·4	3	**36·5**	63·5	7	..	1·025	1·005	35
					6·5	..	1·035	1·015	40
8. Upper Silesia. .	1·87	2·01	**32**	68	5·75	**5·98**	·988	·966	35
					7·10	**7·39**	1·020	·988	35
9. Long flamed gas coal (Ruhr) .	2·4	3·6	**31·5**	68·5	10	**10·6**	1·010	·988	35
					11	**11·4**	1·040	1·015	37·5
10. Lower Silesia. .	·9	4·1	**25·9**	74·1	3	..	1·02	1·0	30
					3·5	..	1·015	1·0	30
11. Short flamed "fat" coal (Rheinland)	·8	1·1	**20·2**	79·8	3·8	**3·9**	1·09	1·068	20-30
					3·8	**3·9**	1·07	1·055	20-30
12. Short flamed "fat" coal (Rhur) .	·8	1·0	**14·7**	85·3	1·4	**1·4**	1·04	1·02	0
					..	..	..	..	..

Of the two lines of tar data for each separate fuel the top line refers to dry distillation and the lower line to distillation with simultaneous steaming. In both cases the retort was heated from the outside.

(2) Bituminous coals containing over 25 per cent volatile matter (on pure coal substance) are likely to yield a commercial quantity of tar; so that for such coals tar recovery should be carried out where possible.

(3) The quantity of tar yielded cannot be predicted from the ordinary fuel analysis, since it stands in no definite relation to the content of volatile matter in a coal.

(4) The higher the tar yield, the lower is the specific gravity of the tar likely to be.

(5) For ordinary bituminous coals (not cannels) the "phenol content" of the tar increases with the volatile matter.

Dr. Fischer reports an exceptional case of a bituminous coal from Istria yielding 15-18 per cent tar which contained only 10-15 per cent phenols. Perhaps this fuel was more akin to the cannel coals, which, as will be seen, are also an exception to the general rule.

(6) The admission of steam during distillation appears to increase the tar yield; but whether this is due to the physical or chemical action of the steam cannot be said.

TABLE 52

TAR YIELDS OF VARIOUS BITUMINOUS COALS BY SLOW DISTILLATION TO 800° C. FINAL TEMPERATURE.

Fuel District.	Fuel. Raw Coal contains		Fuel. Ash free Dry Coal contains		Time in Hours to complete Distillation.	Per cent of Dry Tar or Oil on Ash free Dry Coal.			Fractional Distillation of Dry Condensed Tar.		
	Moisture.	Ash.	Volatile Matter.	Coked Residue.		Tar Condensed.	Oils Absorbed.	Total Tar and Oil Yield.	0°-230° C.	230°-350° C.	Residue and Loss.
	Per cent.	Per cent	Per cent	Per cent.							
North Europe .	1·7	18·9	**46·3**	53·7	7½	13·3	1·0	**14·3**	37·8	32·1	30·1
Scotland. . .	7·4	11·9	**37**	63	6	8·5	0·5	**9·0**	28·3	39·6	32·1
Nottinghamshire .	3·8	11·5	**36**	64	5½	8·3	0·6	**8·9**	27·6	32·2	40·2
South Africa . .	6·2	19·1	**35·6**	64·4	7¾	3·6	0·9	**4·5**	28·4	52·4	19·2
Yorkshire . .	7·35	7·5	**34**	66	8⅙	9·6	1·2	**10·8**	29·5	35·8	34·7
South Wales . .	0·65	13·2	**30·2**	69·8	6½	9·3	0·9	**10·2**	25·0	33·3	41·7
South Africa . .	1·8	18·3	**26·7**	73·3	6¾	5·1	1·3	**6·4**	18·5	30·0	51·5
France . . .	0·5	10·2	**17·4**	82·6	5	1·8	0·3	**2·1**	..	..	..

(7) The formation of tar-oil vapour from the coal at atmospheric pressures generally takes place between 350° and 400° for coals yielding a commercial quantity of tar.

O. C. Berry [1] reports that tar evolution from a large number of varieties of American bituminous coals starts as low as 300° C., is a maximum between 375° C. and 475° C., and ceases below 550°-600° C.

These very variable tar-yield results show clearly that the tar-yielding properties of a coal should only be determined by the direct method of distilling off the tar from a sample of the particular fuel to be employed. A comparison between the tar yields and qualities obtained in gas producer practice and that obtained by the laboratory tests will be given later, but we would mention here that by chemically separating the coal into its various constituents, as is the trend of modern research on coal constitution, we may perhaps find a better guide whereby to determine the tar-yielding property of a fuel, when its content of various main constituents is known.

For instance, Schneider,[2] by stagewise extracting a German brown coal shale by benzol and ether, split the coal substance up into :

(*a*) Resinous matter.
(*b*) Wax.
(*c*) Bitumen, and
(*d*) Carbon and ash residue plus humic acids.

[1] *Tar-forming Temperatures of American Coals*, Bull. 635, University, Wisconsin.
[2] *Abhand. zur Kenntniss der Kohle*, 29, 1919.

By distillation of each separate constituent the following results were obtained:—

TABLE 53

PROPERTIES OF TAR YIELDED BY DISTILLATION OF THE VARIOUS COAL COMPONENTS

	Original. Coal.	Resinous Matter.	Wax.	Bitumen.	Residue + Humic Acids.
Per cent of constituent on original coal	100	2	13	8	77
Per cent tar yield by each constituent:					
On coal	23	1·6	10·1	5·3	5·3
From each constituent . . .	..	77	78	36	7
Properties of tar yielded by each constituent:					
Sp. gr. at 50° C.	·878	·952	·792	·857	?
Solidifying point ° C.	35	Liquid at ordinary temperature	30-31	30	Liquid at ordinary temperature
Per cent tar acids	9	11	3	5	6
Per cent paraffin	32	·5	38	29	5, 6

Clearly, in the case quoted the extracted resinous, waxy, and bituminous bodies are the main tar builders, each giving its specific properties to the tar, the resinous bodies yielding more tar acids and the waxy bodies more paraffin.

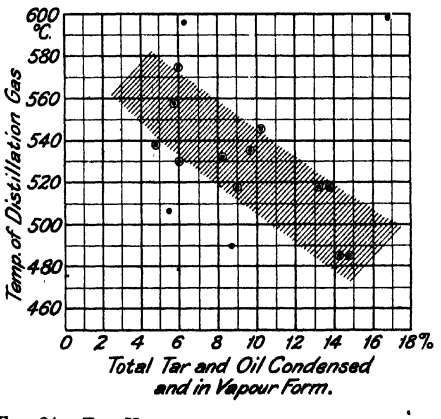

FIG. 24.—TAR YIELD IN RELATION TO DISTILLATION TEMPERATURE.

The effect of varying distillation temperatures upon the tar yield from a bituminous coal is most clearly explained by the diagram shown in fig. 24,[1] which represents the total amount of tar, oils, and oil vapours obtained by heating the same fuel at various constant temperatures, the tar yield in per cent on the crude coal being plotted as abscissae against the distillation temperatures as ordinates.

The shaded part covers on an average the distillation test results, from which it is clear that, the lower the temperature of treatment, the higher is the tar yield likely to be. In other

[1] Roser, Dr. Eng., *Stahl und Eisen*, No. 22, 1920.

words, if a high tar yield is to be achieved it is absolutely essential that the fuel should be *slowly and evenly heated up* in the producer, so that the fuel is given time to deliver up its tar before it is submitted to tar-cracking temperatures.

A most important point, which very few, if any, investigators have studied, is the length of time required to complete that tar evolution which gives the highest yield at various temperatures. So far as bituminous gas producer operation is concerned it is seldom that a fuel is allowed more than half an hour to be heated up to 400°-500° C.; but it should be emphasized here that unless a slow heating of the fuel throughout its tar-yielding stage is carried out, the tar quantity and quality are likely to be seriously affected.

Producer gas tars are of typically low specific gravity in comparison with other industrial tars.

	Specific Gravity.
Blast-furnace tars	·954
Low temperature carbonization tar	1·05-1·07
Low temperature producer tar	1·03-1·07
Vertical retort tar	1·08-1·16
Horizontal retort tar	1·18-1·2
Coke oven tar	1·15-1·2

The gasworks and coke-oven tars which most distilling firms are accustomed to treat, and the tar products which are generally obtained therefrom, practically all belong to the cyclic series of organic compounds, such as benzene, toluene, naphthalene, and anthracene. Low temperature producer tars show an entire absence of these latter compounds, and therefore have a different field of utilization in our various industries, the present exploitation of which field can only be regarded as in its infancy.

A typical low temperature producer tar will contain naphthenes, C_nH_{2n}, viscous oils, and paraffin wax, in addition to a certain quantity of tar acids, which often alters with the oxygen content of the coal. Generally speaking, low temperature producer gas tars are far more closely related in a chemical respect to crude petroleum than to gas or coke-oven works tar.

If no other use can be found for this class of tar, it can, after dehydration, be employed as a crude fuel oil in the state in which it is recovered from the plant, or its distilled oil fractions can be used for driving small motors and the pitch for briquettes and road-making. In each case the industrial value of the liquid tar for these purposes will be several times higher than that of the same quantity of heat in the solid coal.

Quite apart from this fact, it is possible to use the various tar fractions for other purposes. The phenols can be used for the manufacture of disinfectants, wood preservatives, sheep washes, etc., and for the manufacture of various condensation products made with formaldehyde, such as "bakelite," etc. The higher resinous tar fractions can be used for the manufacture of lacquers and waxes. The viscous oil fractions can be used as lubricants, etc., etc. The possible field of

application of producer gas tar products (or, for that matter, other low temperature tar products) is a very wide one which leaves a large scope for future research.

It has been usual to judge a tar by its composition as revealed by fractional distillation, but since this does not sufficiently indicate what commercial bodies a low temperature tar is likely to deliver, a better method is to analyse the tar partly by distillation and partly by chemical methods, as is the general practice in the investigations carried out by the German Institute for Coal Research.

A typical example of how the tar quality varies with the class of coal employed is given by the comparison of the following two tar tests, A and B in Table 54 [1] :—

TABLE 54

	Coal A.	Coal B.	C.
Coal analysis (dry) :	Per cent.	Per cent.	
Volatile matter	22	39	
Coked residue	78	61	
Ash	4·1	1·65	Producer
Carbon	84·45	80·76	gas tar
Hydrogen	4·92	5·54	
Oxygen	3·14	7·67	
	Laboratory test		
Tar yield per cent	3	10	5
Tar analysis :			
Lubricating oils	15·2	10	11·3
Paraffin wax	·4	1·0	·8
Non-viscous oils	33·5	15·0	17·7
Tar acids	14·0	50·0	37·8
Resinous matter	4·2	1·0	·7
Pitch	19·2	6·0	15·0
Loss and Moisture	13·5	17	16·7

These two researchers also refer to the testing of a producer gas tar from a Saar coal, "C" (Table 54), the tar yield from which in the laboratory was about 10 per cent, while the producer gas tar yield was only 5 per cent, a very much lower yield than has been found possible by later developments. The practical tar yield in this case is 50 per cent of the theoretical (laboratory low temperature) yield, while the author has obtained in regular operation on English low temperature

[1] Fischer and Gluud, "Lubricating Oils from Bituminous Coals," *Abh. z. Kenntniss der Kohle*, Part I., 1916.

gas producers a tar yield of 80 per cent or even higher on the laboratory test yield. Other tests on this producer gas tar (C) showed the following result :—

Heating value of dry tar	8500 cals./kg.	15,300 B.T.U./lb.
,, ,, lightest tar oil fractions	9600 ,,	17,300 ,,
,, ,, heaviest tar oil fractions	8400 ,,	15,100 ,,
,, ,, tar-acids in oil fractions	7800 ,,	14,000 ,,

By dry distillation the tar yielded the following fractions :—

Moisture content	11·6 per cent.
Fraction to 275° C.	21 ,,
Between 275° and 310°	8 ,,
Between 310° and 360°	15 ,,
Pitch residue	41·6 ,,
Loss	2·8 ,,
Total	100·0 per cent.

Concerning the tar acids or phenols contained in producer gas or low temperature tars, these may be defined as being such acid carbohydrates as combine with an alkali to form a water-soluble salt, which can be separated from the tar and re-converted into tar acids after separation by adding a stronger acid, say sulphuric acid. As this is the reaction which is characteristic of phenols (carbolic acid) in ordinary coal tar, the name "phenols" is often used to designate all compounds which thus react.[1]

To get an idea as to how the tar acids in the liquor condensate and the tar from coal B (Table 54) were composed, these were analysed, with the following result :—

Total phenols (tar acids) in *liquor*	= 0·1 per cent by weight on coal.
Pyrocatechin in *liquor*	= 0·0026 ,, ,, ,,
Carbolic acid in tar	= 0·06 per cent on tar or 0·006 per cent on coal.
M.O.P. cresols[2] in tar	= 1 to 2 ,, ,, 0·15 ,, ,,

In other words, of the tar acid compounds which are generally contained in ordinary coal tar, only a small quantity could be separated from the low temperature tar. The presence of dimethyl phenols (xylenoles) and trimethyl phenols and homologues was further established, along with other compounds of a similar type but probably of a lower hydrogen content.

A matter of this kind does not come within the scope of producer gas manufacture, but is rather a research problem for a tar-distilling chemist, but it will serve as an instance of how complicated is the problem of finding a use for the tar acids, when so little about their composition is known.

The phenols, or tar acids, are to some extent soluble in water, but the author has not found a higher concentration in the circulated liquors of a gas producer

[1] In connection with the "phenol" of vertical retort and blast furnace tar the reader is referred to Walmsley (*J. S. Chem. Industry*, 1922, p. 297T), published since the preparation of the manuscript.

[2] About three-quarters the quantity of the cresols was the meta-compound.

plant than 0·25 %, and only a fraction of this amount when no circulation of the water takes place. On the other hand, the liquors obtained by dehydrating tars mechanically may contain a higher quantity of tar acids.

Table 55 shows a series of dry distillation tests as made by the Power-Gas Corporation, Stockton-on-Tees,[1] on various producer gas tars from bituminous coal. Where known the tar yield in per cent on the coal treated is stated, and in three cases additional figures are given in italics showing the tar yield and tar composition obtained by the laboratory testing apparatus.

TABLE 55

PRODUCER GAS TARS: FRACTIONAL DISTILLATION AND TAR YIELDS

	A	B	C		D			E		
	Ordinary Producer. Indian Coal 25% volatile matter. Low Load Factor.	By-product Recovery Plant, Lynn Type. American Coal 30% vol. mat.	Mond Gas Plant. Scotland. 37% vol. mat.		Nottinghamshire. Slack 36% vol. mat.			Yorkshire Nuts 34% vol. mat.		
			Producer Tar.	Laboratory Tar.	(1) Mond Gas Tar.	(2) Semi-low Temp. Producer Tar.	Laboratory Tar	(1) Semi-low Temp. Producer Tar.	(2) Low Temp. Producer Tar.	Laboratory Tar.
Moisture content per cent in undehydrated tar	27·2	24	38	..	10·0	2·0	..	33	50	..
Distilled tar fractions in per cent by weight on dry tar:										
70°-170° C.	18·2	4·9	·7	*5·35*	·5	1·0	*4·5*	1·5	1·0	*2·8*
170°-230° C.			3·3	*23·0*		6·8	*23·1*	7·8	10·5	*26·7*
230°-270° C.			6·6	*15·0*	3·3	10·7	*13·2*	12·6	10·3	*7·4*
270°-300° C.	17·5	22·4	7·2	*24·55*	10·5	24·6	*19·0*	7·0	9·6	*38·4*
300°-350° C.			14·1					13·7	31·7	
Above 350° C.	..	..	26·1	..	..	14·9	..	17·3	12·8	..
Residue and loss	64·3	73·7	37·0	*32·1*	75·7	41·6	*40·2*	37·5	24·2	*32·5*
Dry-tar yield in per cent on dry coal	..	..	3·6	*7·4*	2·08	5·2	*7·28*	7·6	9·5	*10*

From a comparison of tars "C" and "D_1" with tars "D_2" and "E_1" and "E_2," it will be clear that more than 50 per cent of the tar that could be yielded is destroyed in the Mond producer, while with the semi-low temperature producers "D_2" and "E_1" the tar yield is about 75 per cent of the laboratory yield. The highest tar yield is obtained in the case of the true low temperature producer "E_2," where it is very close to the theoretical yield.

The cause for the different quantities of tar yielded in the ordinary Mond producer, the semi-low temperature producer, and the true low temperature producers mentioned in this table can only be attributed to the fact that the fuel upon introduction in the Mond producers is at once submitted to an average temperature of 500°-550° C., which will cause a sudden evolution and simultaneous decomposition of the tar vapours which, as we have seen, are formed at about 350°-400° C. The time given for the coal to be heated up to the same temperature in the true low

[1] Rambush, West of Scotland Iron and Steel Institute, Session 1922–1923.

temperature producer is three to four hours, while that of the semi-low temperature producer is about one-third of this time. In other words, the rate of increase of temperature of the fuel particles should be borne in mind, while the tendency to "scorch" any single fuel particle should be avoided wherever possible.

In all cases, however, the tar obtained in practice is of a different composition to that obtained by the laboratory test. This is due to three main causes.

(1) Some of the tar is decomposed in the producer, due to unevenness of temperature in the various layers through which the gas containing the tarry vapours has to pass before it leaves the producer.

(2) The gas volume made per ton of fuel in the case of producer gas is about ten to twenty times as large as that of the distillation gas obtained by the laboratory test, and for this reason the partial pressure of the lighter tar vapours is so much lower in the case of the producer gas that these will remain in this gas as permanent gases and not as condensable oils, unless the gas is washed with liquids having a special tar-absorption affinity.

(3) The atmosphere in which the tar formation from the fuel takes place is an entirely different one in the gas producer, where the distillation takes place in the presence of very much larger quantities of carbon oxides and nitrogen (and consequently less hydrogen gases) than when dry distillation by external heat takes place. Most likely the chemical action of the producer gas components will affect the tar quality which is yielded by the tar-building bodies contained in various classes of fuels.

Items (2) and (3) are conditions which are practically inseparable from the producer gas tar-making process; consequently item (1) is the one to which attention should be given by the producer gas manufacturer and designer, when a high tar oil yield is aimed at.

So far as concerns the chemical composition of the low temperature gas producer tars obtained from German coals by treatment in the various special adaptations used during the war period for making oils, Table 56 gives particulars obtained by Dr. F. Frank [1] embodying the tar examination results obtained by the Mineralöl-Versorgungsgesellschaft, Berlin.

Summary

Concerning the yield of tar oil, etc., by-products by the gasification of various fuels, we may summarize the above by saying:—

(1) The constitution of a fuel is as yet an unknown factor; therefore the best means at present which will enable a practical man to obtain an idea as to the possible tar oil yield and composition is to carry out a laboratory distillation test.

(2) To give the highest yield of a light tar rich in oils in a gas producer the fuel should not be brought up too quickly to the temperature at which the tar-yielding bodies commence their evolution, and all tendency to local scorching of fuel must be avoided.

[1] See *Stahl u. Eisen*, March 17, 1921.

(3) The initial tar-yielding temperature is generally not below 200° C. for vegetable matter and peats, not below 250° for brown coals and lignites, and not below 350° C. for bituminous coals.

(4) Under favourable conditions a gas producer should yield as tar 80 per cent of that obtained by a laboratory distillation test.

TABLE 56

GERMAN GAS PRODUCER TAR YIELDS AND COMPOSITION

Fuel	Saar Coal.		Upper Silesian Coal.		Lausitz. Screened Run-of-Mine.		Brown Coal Briquettes.	
Gas producer type	Low Temperature Gasification.	Linck's Mechanical Retort.	Low Temperature Mond Gas Producer.	Low Temperature Gasification.	Mechanical Grate Producer with Distillation Chambers.	Heller Gas Producer.	Heller Gas Producer.	Generator of A.G.B.
I. Tar yield per cent	5-5½	6	6-7	6-6½	2-2·3	None	?	10-12
II. Tar properties:								
Specific gravity (15° C.)	1·104		1·059	1·02-1·05	1·012	..	1·005	·98
Mechanical impurities per cent	2·36		2·03	1·3	·52	..	·58	·4-·5
Viscosity at 100° C.	..		1·69	1·7	..	..	1·84	..
Oil yield per cent	59·5		66	72	66	..	68·7	70
Pitch yield per cent	39·7		33	27	32	..	30	28
III. Properties of tar oil:								
Specific gravity (15° C.)	1·020		1·022	1·023	1 008	..	..	·97
Viscosity at 50° C.	1·41		2·0	1·8	2·5	..	..	2·5
Ignition temperature ° C.	108		105	96	112	..	..	105
Solidification temperature ° C.	−2		−2	−1	..	..	..	+18
Content of paraffin per cent	1·95		2·8	2·92	3·5	..	11·8	10-14
Melting point of paraffin ° C.	58		51	52	51	..	51·5	50·5
Content of tar acids per cent	40		36	37	26	..	13	28
" " asphalt per cent	3·07		..	..	8·9	..	..	..
IV. Oil fractions after removal of the paraffin in per cent on tar:								
Content of light oils per cent	25·5		27	30	..	..	26·5	24·0
Specific gravity at 15° C.	·976		..	..	..	..	·97	·94
Ignition temperature ° C.	89		82	85	..	..	95	95
Lubricating oils per cent	31·4		37	30	..	..	35·5	44
Ignition temperature ° C.	148		152	150	..	..	179	150
Viscosity at 50° C.	4·97		4·9	6·7	.	..	8·5	4·5
V. Properties of pitch:								
Twisting point ° C.	100		76-77	83-84	92·5	..	57·5	65
Matter insoluble in benzol per cent	22·7		12·3	16·7	12·8	..	Traces	15
Ash per cent	1·11		·72	1·09	·46	..	..	·6

(5) Producer gas tars are of a type similar to crude petroleum and are generally of the paraffinoid series; they also show the absence of cyclic bodies such as naphthalene.

(6) The above represents only our present-day knowledge on the subject of tar production in gas producers; and since this branch of fuel treatment is still in the initial stages, it is likely that future developments may bring us to more final conclusions than are now possible.

3. Sulphur

During gasification of a fuel in a gas producer, practically all the sulphur in the fuel is evolved as hydrogen sulphide, which can be recovered from the gas in a direct or indirect way. Several methods for recovering this hydrogen sulphide from the gas have been suggested (see pp. 422), and are technically possible, although the commercial success of these processes still leaves something to be desired. In spite of the present state of unsuccessful (commercially) removal of the sulphur from the gas, improvements may very likely be brought about in the future, hence the rules governing the sulphur elimination from a fuel are referred to in a general way below.

The sulphur content in the producer gas leaving the generator depends mainly upon the total amount of sulphur contained in the fuel, which varies considerably with the nature of the fuel, as will be evident from the following figures, which serve as an example only :—

Fuel.	Approximate Sulphur Content.
Welsh anthracite generally	·5 per cent.
A German anthracite	1·7 ,,
Bituminous coal generally	1 to 2 ,,
A Scotch bituminous coal	4 ,,
A German ,, ,,	3 ,,
Arsa bituminous coal, Istria	10 ,,
An American bituminous coal	4 ,,
Lignite generally	·5 to 1·5 ,,
A Spanish lignite	6 ,,
Peat generally	1·5 to 2 ,,
Wood generally	Trace.

Sulphur exists in most fuels in three different forms—(1) as sulphates, such as, say, gypsum, iron sulphate, etc ; (2) as metallic sulphides, such as, say, pyrites and zinc sulphide, and (3) as a constituent of various organic sulphur compounds, in combination with the carbon, hydrogen, and oxygen of the coal substance proper. The subject of the distribution of the sulphur in its various forms in coal and of the methods for determining each separate type of sulphur has been treated at length in a paper by Powell and Parr.[1]

A report upon the behaviour of the various types of sulphur upon distillation in a retort has been made by A. R. Powell,[2] who found the results given in Table 57 by heating the fuels successively at increasing temperatures.

From these figures it would appear that by dry distillation only part of the sulphur is evolved as H_2S, the remaining sulphur being retained in the coke. Powell

[1] Bulletin No. III., University of Illinois.
[2] *Journal of Engineering and Industrial Chemistry*, November 1, 1920.

TABLE 57 (Powell)

BEHAVIOUR OF SULPHUR IN COAL BY DISTILLATION

State of Sulphur	Pocohontas Coal, ·56 per cent S. Temperature ° C.						Tennessee Coal, 4·25 per cent S. Temperature ° C.					
	0	300	400	500	600	1000	0	300	400	500	600	1000
Pyrites sulphur .	·08	·07	·09	·01	..	..	1·75	1·75	1·42	·31	..	..
Sulphate sulphur .	·01	·02	·02	..	..	..	·71	·55	·44	·01	·01	..
Organic sulphur .	·47	·47	·44	·43	·35	·27	1·79	1·63	1·51	1·70	1·87	1·81
Sulphide sulphur .		..	..	·04	·05	·09	..	·13	·44	·93	·82	·84
Sulphur in tar .	..	..	..	·02	·03	·03	..	...	·05	·10	·16	·16
Sulphur as H_2S .	..	..	·01	·06	·13	·17	..	·19	·39	1·2	1·39	1·44
Total . . .	·56	·56	·56	·56	·56	·56	4·25	4·25	4·25	4·25	4·25	4·25

further showed that if the coke sulphur were treated in a current of hydrogen at 1000° C., practically all the sulphur is eliminated as H_2S, the coke being thus obtained in a state of high purity in regard to sulphur.

Cobb and Monkhouse [1] find, on the other hand, that only about 50 per cent of the sulphur in the coke is driven off after about thirty hours' treatment in a current of hydrogen at 800° C., while a further 40 per cent was given off from the coke by successive steaming at the same temperature for about forty hours. A previous treatment of the coke with nitrogen gas had no effect whatsoever on the sulphur content of the coke.

Tests have been made on large gas producer plants using bituminous coals, which show that between 70 and 90 per cent of the total sulphur in the coal remains in the crude gas leaving the producer as hydrogen sulphide, and that no sulphur is present as sulphur dioxide. If gas cooling and cleaning plant of the ordinary type is attached to the generator, a large quantity (about 40 to 50 per cent of this hydrogen sulphide) is generally removed from the gas by the cooling water. Such elimination of sulphur should be avoided as far as possible if a high yield of this by-product is aimed at.

We may therefore summarize as follows :—

The bulk of the sulphur contained in a fuel burnt in a gas producer will exist in the crude gas as hydrogen sulphide.

All gas producer plants in which sulphur is to be removed as a by-product must therefore be based upon the use of those chemical reactions in which hydrogen sulphide participates.

[1] *Gas Journal*, October 19, 1921.

(*E*) THE COMPOSITION OF THE ASH

From various remarks made in the foregoing, it will have been realized that not only is the quantity of the ash contained in a certain fuel a point of serious consideration, but further, that the ash composition may very largely determine the best conditions for an economical gasification of a given fuel.

We have seen that traces of various minerals in the ash may affect the reaction rates at a given temperature of the carbon dioxide and steam with the hot carbon, and also affect the ammonia yield; further, we have seen that the "clinkering" temperature of the ash determines the temperature which it is most economical to employ in the lower gas producer zones. When higher temperatures are employed, the formation of clinker and its growth (generally from the brick-lining inwards) results in heavy manual labour being required to poke the clinker loose, or break it up into such small pieces that it can be removed with the ash from the producer. If poking is neglected the clinker growth may have the effect of causing the "hanging up" of the fuel bed, with consequent formation of "holes" and the existence of uneven burning in the fuel bed.

Some fuel ashes (particularly is this true in reference to certain German brown coals) give rise to large difficulties in gasification, not only on account of their clinkering tendency, but also because the ash is very fine, and in some cases cements together in the water lute, making its removal a difficult problem.

In later years producers have been put to work in which the ashes are converted completely into a liquid slag, which is not allowed to solidify again until tapped from the producer; such solidified slag will have a commercial value, which cannot be said about the ashes removed from most other gas producers. The field for the employment of liquid slag producers being a limited one, however, we may say, as a general rule, that the ash from a gas producer can only be looked upon as a cause for expenditure both in its passage through the producer and in its later disposal away from the plant.

The modern tendency of producer gas manufacture is to obtain the highest possible rate of gasification, and to obtain the latter we must not exceed those temperatures which cause clinker formation to any considerable degree, without providing proper means for the breaking up and removal of the clinker. For this reason we shall concern ourselves with a study as to how far the properties of various fuel ashes indicate the likely behaviour of the fuel in a given gas producer. Such a study will also enable us to predict with a reasonable degree of accuracy which type of producer and operating condition is likely to be the most suitable for dealing with fuels containing ash of a certain quality.

It would appear that only in recent years have researches upon the relation between the composition of the ash and its clinkering temperature been undertaken, but we know at present just about enough to indicate to us that this question is a most complicated one.

The ash remaining after burning a fuel in a gas producer is not only derived from the coal substance as such, but may also be the residue of impurities mixed

with the coal, such as gypsum, shale, pyrites, etc. The final residue after combustion will therefore obviously be a most complex mixture of acidic and basic oxides, mainly silica and alumina and quantities of the fluxing compounds—iron oxide, lime, magnesia, alkalies, etc.—which form complicated silicates of the most varying composition, depending upon the relative quantities of the different fluxing compounds.

As is the case with other systems of mixed compounds, the ash components will form "eutectic" mixtures of lowest melting point, which gradually melt out from the whole mass, and on account of their relative fluidity will tend to form a binder for a part of, or the remainder of, the ash when cooled, thus forming a more or less spongy clinker, depending upon how much of the total substance has melted out. It is thus not unusual to find in practice that the composition of the clinker is different from that of the ash. Consequently we cannot speak about the clinkering temperature of an ash as a definite temperature above which all the ash is formed into clinker, and below which no clinker at all is formed. The temperature range over which the whole ash may gradually pass from the solid to plastic and from plastic to a liquid state may extend over as narrow a range as 20° C. and as wide a range as over 200° C. The deformation range for the ashes from most industrial fuels will lie between the temperature limits of 1000° and 1700° C.

Fig. 25 shows by way of example the deformation stages of ash cones made from two American coals as reported by Fieldner and Hall.

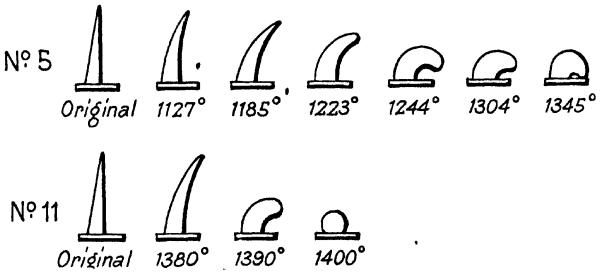

Fig. 25.—Melting Range of two Coal Ashes.

The ashes had the following analyses :—

Ash Sample

	No. 5.	No. 11.
SiO_2	42·2	50·4
Al_2O_3	30·6	24·0
Fe_2O_3	19·0	20·4
TiO_2	1·2	1·4
CaO	1·3	1·7
MgO	1·0	·2
Other alkalies	4·2	2·0
SO_3	·2	·3

When determining the "melting point" of a fuel ash in the laboratory, the ash is generally prepared in shapes like a Seger cone and heated to gradually increasing temperature in a high temperature furnace. The behaviour of the cone during heating is watched and the temperature corresponding to complete collapse recorded. Such temperature is commonly designated the "melting point" of the ash.

NOTE.—The commencement of the plasticity is by some researchers designated as the melting point of the ash, but since the complete collapse stage is the most usual basis for melting-point determination, it will be the only one referred to as such in the following.

When considering such temperature determination, or applying the result to practical work, it should be borne in mind that the conditions for a thorough ash intermixing (such as is the case with a sample prepared in the laboratory) do not exist in practice; further, that the furnace atmosphere in which the melting of the ash is carried out is seldom like that existing in a gas producer.

Fieldner, Hall, and Feild [1] have carefully investigated this latter point, using several different furnace types in which the atmosphere was maintained either reducing or oxidizing. One of the reasons for the difference in behaviour then pointed out is attributed to the *iron content* of the ash, which may exist as metallic iron (Fe), as ferrous oxide (FeO), as magnetite (Fe_3O_4), or as ferric oxide (Fe_2O_3); iron existing as pyrites [2] is at low temperatures converted into Fe_2O_3. When heated in air Fe_2O_3 dissociates at 1350° C. into Fe_3O_4 and oxygen, and when present with silica it forms slags of very high melting temperatures so long as the atmosphere is *oxidizing*.

On the other hand, if the ash is heated in a slightly *reducing* atmosphere of hydrogen and carbon monoxide, the ferric oxide, Fe_2O_3, is reduced to ferrous oxide, FeO, which forms silicate fluxes of relatively much lower formation temperatures, such as:

$$\left.\begin{array}{l} 4FeO \,.\, SiO_2 \\ 2FeO \,.\, SiO_2 \\ 4FeO \,.\, 3SiO_2 \\ FeO \,.\, SiO_2 \end{array}\right\} \text{Formation temperature ranges from 1158° to 1183° C.}$$

This is a most important point in so far as ashes in practice will fuse at different temperatures, depending upon whether the ashes are present in the reducing or oxidizing zones of the gas producer. The author has found, especially with ashes rich in iron, clinker from the same fuel in between pieces of coal at zones at some distance from the grate differing entirely from the clinker found at the grate (*i.e.* the proper ash zone).

Since, from the gas producer engineer's point of view, the clinker formation temperature is that temperature at which the ash forms a slag sufficiently fluid to flow and agglomerate in the fuel bed, it will be clear from the above that, so far as concerns the melting-point determination for ashes from fuels to be used in gas

[1] U.S.A. Bureau of Mines, April 1, 1915, "Fusibility of Coal Ash in various Atmospheres." See also *Bulletins* Nos. 129 and 209.

[2] It is often found that fuels rich in sulphur cause clinkering difficulty. This is mainly due to the presence of the iron combined with the sulphur (pyrites), but sometimes also to the existence of easily fusible sulphates.

producers, these ought always to be carried out in a furnace in which the atmosphere is reducing, otherwise the clinkering temperature obtained in practice may be found to be very much lower than that obtained by a laboratory determination.

The effect of the presence of *alkali salts* in the ash may be very serious. The only apparent difference between the two ash samples referred to in fig. 25 is that the one which commences to soften first (No. 5) contains more alkalies than the other. Whether this is the actual cause of the difference or not is, of course, difficult to say. The presence of water soluble salts of alkalies in a considerable amount in certain German raw brown coals used for gasification [1] is said to be a very serious obstacle against their economic commercial utilization. Generally only about 1 to 7 per cent of the ash is soluble in water (and such fuels give no difficulties), but when the percentage of water soluble salts in the ash comes above 12 per cent (even up to 40 to 50 per cent exists) the fuel is practically useless. The soluble salt is generally sodium sulphate (Na_2SO_4) with a trace or so of common salt (NaCl). The effect of the presence of these salts, which each melts below 900° C., and which form eutectic mixtures of even lower melting-points, will, of course, mean that the ash will clinker at a very low temperature, so low, in fact, that fuels of this type could probably only be successfully gasified in liquid slag producers. A further disadvantage of using fuels containing sodium sulphate is that these salts absorb more than their own weight of water, which would have to be evaporated during the gasification.

The effect of varying quantities of *lime* and *magnesia* in the ash upon the clinkering tendency of fuel is such that so long as the quantity, which corresponds to the eutectic mixture of the lowest melting-point, is not exceeded, the ash-fusing temperature will decrease, while the presence of further quantities of these two oxides will cause the fusing temperature to increase.

In this connection reference may be made to Profs. Bone and Wheeler's investigation [2] of the fusibility of the ash from certain Lancashire coals when used in a Mond gas producer (Table 58).

Here the most fusible ash was found to be the Wigan 4 ft., while Trencherbone was the least fusible, the fusibilities of the various ashes decreasing with the lime content from right to left in the table. It should be noted that the lime content in no sample exceeds 16 per cent.

The effect of lime and other oxides upon the melting temperature or the fluidity of the molten ash becomes of great importance in the case of liquid slag producers. since it is very seldom that cases of coal ash are met with of which the composition is such as to enable the ash (slag) to be maintained in a completely molten state until tapped from the producer. In such cases it is not only necessary to maintain the temperature in the lower part of the producer very high by hard blowing, but it is generally also necessary to add to the fuel charged a "slagging" medium, generally lime or furnace slag. It is clear that if the slag is maintained in a molten state the iron contained in the ash or in the slagging medium will separate out from

[1] Limberg, *Feuerungstechnik*, August 15, 1921.
[2] *Journal of Iron and Steel Inst.*, 1907.

the slag, and the two components (iron and slag) may be regarded as two non-mixable liquids of different specific gravity, the iron always sinking to the bottom of the liquid slag. Consequently, the fluxing agent iron is entirely absent from the slag,

TABLE 58

ASH ANALYSIS OF LANCASHIRE COALS

	Name of Seam.				
	Wigan 4 ft.	Florida.	Arley.	Wigan 6 ft.	Trencherbone.
SiO_2 . . .	31·40	30·02	26·40	33·8	39·40
Al_2O_2 . . .	21·15	19·14	28·00	21·95	28·49
Fe_2O_3 . . .	22·85	22·14	32·42	29·30	22·85
MnO . . .	·55	·65	0·0	0·0	0·40
CaO . . .	16·25	11·10	7·00	3·00	4·30
MgO . . .	·10	3·65	2·88	3·24	1·08
SO_3 . . .	7·00	13·29	2·74	8·58	3·26
P_2O_5 . . .	·11	·15	·28	·15	·17

and the fluidity of the latter will mainly depend upon its content of lime, which, if present in insufficient quantity in the ash, will have to be added in a suitable quantity with the slagging medium. We thus get conditions governing the production of a liquid slag similar to those existing in blast furnace practice.

Table 59 gives analyses of various blast furnace slags and their softening temperatures.[1]

TABLE 59

BLAST FURNACE SLAGS

SiO_2	Al_2O_3	Fe_2O_3	TiO_2	CaO	MgO	MnO	CaS	Softening Temperature ° C.
48·0	8·0	..	..	32·0	5·0	0·1	2·0	1244-1254
43·6	9·5	0·59	0·19	40·2	2·1	0·2	2·8	1279
37·2	11·5	0·42	0·52	25·3	19·6	2·2	3·5	1297-1300
33·7	26·6	0·79	0·28	26·7	6·4	0·33	4·9	1342
34·3	13·8	0·35	0·56	41·3	6·4	0·55	5·4	1343-1360
18·3	35·3	0·52	0·58	31·2	9·7	0·35	4·1	1410
31·5	14·8	0·29	0·29	47·6	1·8	0·2	3·6	1403-1443

To obtain a slag that can easily be tapped from the producer, it is not only necessary that it be heated to a temperature exceeding that of its softening

[1] *Engineering*, December 14, 1917.

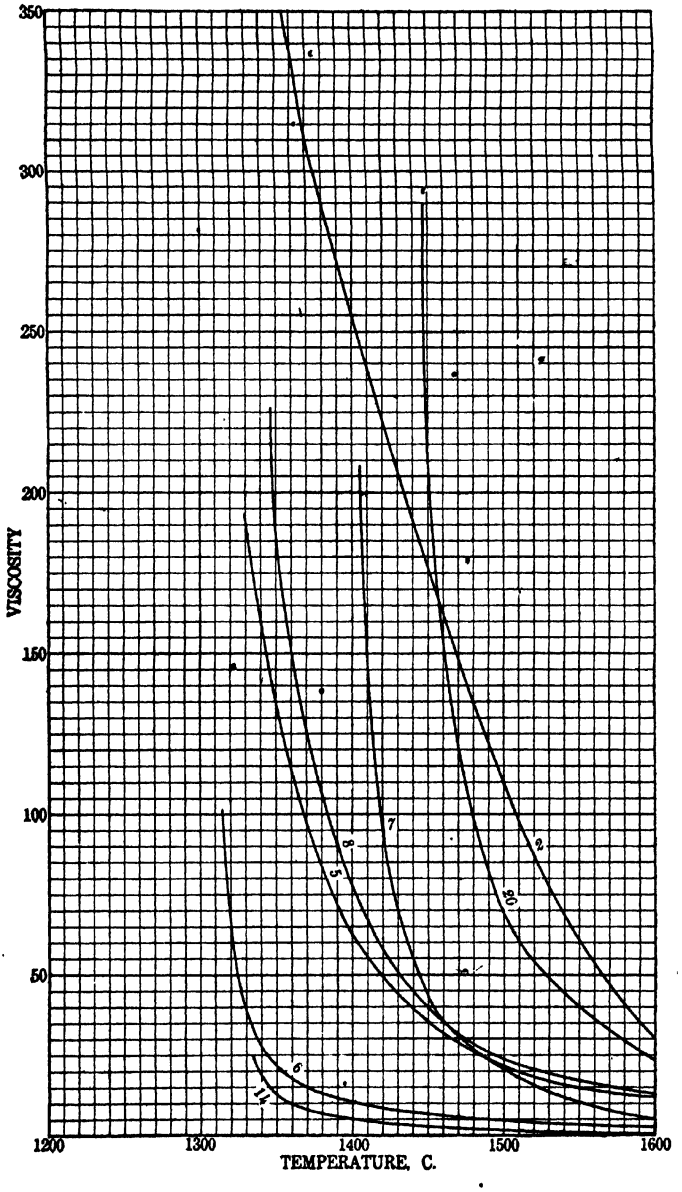

FIG. 26.—SLAG VISCOSITY DIAGRAM FOR VARIOUS LIME, ALUMINA, AND SILICA MIXTURE

temperature, but also that the temperature be so much higher that its viscosity becomes sufficiently low to enable the slag to flow away easily.

The whole problem of the melting of slags and their viscosity is a matter for special study upon which we shall not enter here, but the following example will suffice to indicate the complexity of this whole matter, and that the fluidity of a slag cannot be definitely predicted from either the analysis or the melting-point determination.

Field and Royster [1] examined the viscosities of the following synthetic mixtures of lime, alumina, and silica (the main slag constituents) :—

No. of Slag.	Percentage Composition.			Melting point ° C.* (+ or − 5° C.)
	Lime CaO	Alumina Al_2O_3	Silica SiO_2	
2	23·25	14·75	62	1170
5	38	20	42	1265
6	47·2	11·8	41	1310
7	29·2	39	31·8	1380
8 †	49	14·4	36·6	1415
14	49·5	43·7	6·8	1335
20 †	48·7	39·3	12	1430

* The melting point is defined as the temperature at which the viscosity becomes infinite.
† All samples except No. 8 and No. 20 represent eutectic mixtures.

The result of the observations is shown graphically in fig. 26. Typical is the difference between, say, slag No. 2 and, say, No. 6 or No. 14. No. 2 is the mixture which has the lowest melting point (about 150° C. lower), yet at 1400° C. its viscosity is twenty-five to fifty times as large as that of the other slags.

In spite of what has been said in the above, it is always possible to draw certain conclusions as to the behaviour of a fuel in a gas producer when the analyses of the ash and its melting point be known. This matter has not been nearly as carefully investigated in Europe as in America, where several bulletins have been issued by the Bureau of Mines in which the melting points of the ash from most collieries and coal seams are given. In England, Dunn and Lessing have concerned themselves with some research on this problem, and, on the Continent, Prof. Constam of Zurich.

In Table 60 is given J. T. Dunn's [2] analyses of eighteen different fuel ashes and their respective melting points.

Ash No. 1 was obtained from a Natal coal, No. 18 from a Spitzbergen coal, while No. 19 is an analysis of China clay given for comparison with the remaining fuel ash samples. D. indicates Durham, N. Northumberland, and S. Scotland.

[1] Technical Paper 189, Bureau of Mines, U.S.A.
[2] "The Melting Point of Coal Ash," *Soc. Chem. Ind.*, January 15, 1918.

TABLE 60 (Dr. J. T. Dunn)

MELTING POINTS OF COAL ASH

sh No.	1.	2.	3.	4.	5.	6.	7.	8.	9.	10.	11.	12.	13.	14.	15.	16.	17.	18.	19.
uel district	Natal.	D.	N.	D.	D.	N.	D.	N.	N.	S.	S.	S.	D.	D.	S.	N.	D.	Spitz-bergen.	China Clay.
ilica	25·90	45·50	36·90	40·80	40·40	37·40	42·10	42·70	45·40	41·20	46·93	49·30	43·30	47·10	48·50	51·10	51·80	51·15	51·89
lumina	17·46	25·69	25·82	31·36	29·34	28·21	30·67	35·05	35·53	33·45	33·23	35·40	38·88	37·39	36·93	35·93	38·25	44·70	44·59
erric oxide	16·86	19·00	25·00	24·00	15·21	22·14	21·71	8·79	12·57	17·14	8·14	7·29	11·71	11·14	7·36	4·86	5·64	1·25	0·98
anganese oxide	trace	0·20	0·30	0·20	0·30	0·25	0·30	trace	none	0·40	0·20	0·30	0·90	0·40	0·10	trace	trace	trace	none
ime	22·80	2·09	3·71	1·19	4·61	4·65	0·99	5·84	3·54	3·79	5·24	2·96	1·36	0·82	3·33	2·78	0·45	0·15	0·38
agnesia	3·22	1·16	2·10	0·36	1·96	1·67	0·76	1·30	1·23	1·78	0·95	1·34	0·43	0·65	1·08	0·80	0·74	0·36	0·38
lkali	2·70d	2·68	4·79	1·15	7·23	4·23	2·55	2·09d	0·83	0·83	2·82	1·90	2·12	1·38	1·54	3·32	1·71	1·20d	1·77
itanium oxide	0·74	1·31	1·38	0·94	0·95	1·45	0·92	1·16	0·90	1·41	2·49	1·51	1·31	1·12	1·16	1·21	1·41	1·15	0·15
ulphuric anhydride	8·91	..	..	..	..	..	..	..	..	..	..	..	..	..	..	..	..	..	..
hosphoric anhydride	1·55	..	..	..	..	..	..	..	..	..	..	..	..	..	..	..	..	..	..
uicklime	5·95	..	..	..	..	..	..	..	..	..	..	..	..	..	..	..	..	..	..
aryta	..	2·37	..	..	..	..	..	..	..	..	..	..	..	..	..	..	..	..	..
elting point ° C.	1020	1150	1150	1200	1230	1330	1340	1380	1380	1390	1415	1460	1460	1460	1480	1480	1500	..	..

The ash analyses given in Table 61 for various American coals show similar results to those obtained by Dr. Dunn.

A special furnace and other instruments are required to enable melting-point determinations on ash samples to be carried out—for which very few works' laboratories are laid out. There is no such limitation in regard to carrying out a complete chemical analysis of the ash, which in itself often gives very useful information regarding the possible clinkering tendency of the ash.

For reasons already explained, melting-point determinations are to be carried out with special care and are of relative value only for each particular testing method employed. All the same, from the analyses given in Tables 60 and 61 we may perhaps say that to avoid bad clinkering troubles the ash should have the following *approximate* composition :—

Silica	above 45 per cent.
Alumina	,, 35 ,,
Ferric oxide . . .	not over 10 to 15 per cent.
Lime	,, 5 to 10 ,,

TABLE 61

ANALYSIS OF ASH FROM SOME AMERICAN COALS

No.	SiO_2	Al_2O_3	Fe_2O_3	CaO	MgO	SO_3	Undetermined.	Melting Point ° C.
1	28·0	8·3	49·7	5·3	1·2	6·6	0·9	1092
2	29·7	14·2	49·9	2·1	0·7	2·2	1·2	1133
3	34·0	21·0	23·2	7·4	5·8	8·5	0·1	1195
4	35·8	34·1	12·4	10·4	trace	6·5	0·8	1213
5	46·5	35·7	7·8	5·0	1·0	3·8	0·2	1290
6	42·0	38·0	15·8	2·2	1·1	0·8	0·1	1413
7	54·1	33·3	7·8	1·5	1·5	0·7	1·1	1450
8	50·8	33·9	10·2	1·7	trace	2·0	1·4	1510
9	49·0	42·0	5·0	1·8	trace	1·9	0·3	1660

Obviously the above are only the four main constituents of coal ash, the fusibility of which will be seriously affected by the presence of other compounds, such as other metal oxides or alkaline earths or alkalies. A better approximation (in any case for the less fusible ashes) would be to consider the ash as a clay, of which the refractory coefficient may be calculated.

For such purposes Bischof lays down the following formula whereby the refractory coefficient Q, of a fireclay of a given analysis (see also pp. 195-197), may be estimated with some approximation :—

$$Q = \frac{[\text{Oxygen content in alumina}]^2}{\left[3 \times \begin{matrix}\text{oxygen content in}\\ \text{basic oxides}\end{matrix}\right] \times \left[\begin{matrix}\text{oxygen content}\\ \text{in silica}\end{matrix}\right]}.$$

The fusing of fireclay, as well as most ashes, is the result of the combination of the acidic silica with the basic and metallic oxides to form their respective silicates.

The higher the content of bisilicate of alumina the less fusible will be the ash. The tendency of any silica present over and above that which corresponds to the formation of bisilicates with the alumina and with the fluxes will be to form higher and more fusible silicates.

To minimize clinkering troubles with fuels having a very fusible ash or one which attacks the brick-lining, the addition of either clay (alumina) or sand (silica) to the fuel charged has proved to be successful in more than one gas producer plant. Obviously this method of working is just the reverse of the liquid slag producers where fluxing bases are added to the fuel charged.

To enable the factors involved in Bischof's formula for the refractory coefficient to be quickly available for calculation, these are given below.

	Per cent O in Al_2O_3	Per cent O in SiO_2	Per cent O in RO	3 × (per cent O in RO)
Al_2O_3 . . .	46·96	..	..	..
SiO2 . . .	..	52·98	..	..
FeO* . . .	..	..	20·0	60
CaO	..	..	28·53	85·6
MgO . . .	..	..	39·71	119·1
MnO . . .	..	..	22·54	67·6
K_2O	..	..	16·98	50·9
N_2O	..	..	25·71	77·1

* Due to the scale adopted by Dr. Bischof the iron estimated as Fe_2O_3 must be figured as FeO, for which reason the factor given for FeO is the figure with which the percentage of Fe_2O_3 in the ash analysis is to be multiplied to obtain the proportion of oxygen corresponding to the FeO state.

For the purpose of comparison the refractory coefficient for some of the ashes given in Tables 60 and 61 has been calculated with the following result :—

	Melting Point.	Q calculated.
Table 60, No. 3 . . .	1150	·33
„ „ 5 . . .	1230	·45
„ „ 10 . . .	1390	·695
„ „ 17 . . .	1500	1·94

	Melting Point.	Q calculated.
Table 61, No. 2 . . .	1092	·089
,, ,, 5 . . .	1290	1·13
,, ,, 6 . . .	1413	1·16
,, ,, 7 . . .	1450	1·14

Although these calculations show no absolute agreement between the melting point and the refractory coefficient (probably due to the presence of other compounds than silicates in the ash, such as gypsum, phosphates, etc.), yet the calculation of the refractory coefficient obviously gives a rough guide as to the possible clinkering tendency of a fuel ash of a given analysis.

From the above it should be plain that to accurately determine the clinkering tendency of a fuel from an ash analysis or a fusing-point determination is a most complex matter at the present stage of the research work in this branch.

Until this has become more standardized and more carefully investigated we may perhaps draw the following generalizations as applicable to producer gas practice :—

(1) When the content of silica and alumina in the ash is high, the ash will have a high melting point.

(2) Iron content in the ash may cause the formation of fluxes of very low melting point.

(3) So long as the lime content does not become too high (over 30 per cent) its effect is generally to cause a low melting point of the ash.

(4) The fusing point is entirely independent of the ash quantity and is purely a qualitative property, which may be determined in an approximate way only from the analysis on the lines usual when calculating the refractory coefficient of fireclays.

(5) By adding to the fuel iron and calcium oxides it is possible to lower the fusing temperature of the ash, and, on the other hand, it is possible to raise the temperature by adding clay, or even powdered silica.

(6) Fuels rich in sulphur are likely to yield ash of a low fusing temperature.

PART II

GAS PRODUCER PLANT

PRODUCER gas cannot be made from varying classes of fuels and for varying purposes in the same generator with equal efficiency.

Producer gas may be consumed in the hot crude state as it issues from the generator, or it may be cooled and cleaned to a degree corresponding to the particular purpose for which it is to be used.

Producer gas cannot be made unless apparatus or machinery is provided whereby a gas or air flow is created.

In the following we shall, therefore, deal successively with :—

CHAPTER IV.—GAS PRODUCER TYPES.

,, V. GAS CLEANING AND COOLING PLANT TYPES.

,, VI.—MACHINERY AND APPARATUS FOR CAUSING GAS FLOW.

CHAPTER IV

GAS PRODUCER TYPES

PRODUCER gas can be made in practically any type of apparatus provided with means for supplying air and steam and for removing the gas, but the efficiency at which it is produced and the composition of the gas made depends very much upon whether the apparatus used is the most suitable for the particular fuel and purpose in question. There are innumerable types of generators and plant in more or less successful operation, all of which cannot be described here. In the following we shall therefore deal with some typical producer parts and plants which are in operation in this country and abroad.

Before choosing a gas producer type as being the most suitable for a specific purpose, it is necessary to bear in mind not only whether it is generally dimensioned in such a way as to be suitable and thermally efficient for the treatment of the fuel or fuels available, but also whether it is provided with sufficient means to enable any anticipated gasification difficulties to be overcome and dealt with in a manner that corresponds with the amount of money expended on the purchase of a producer gas installation.

To realize how difficulties in the operation may be experienced, it will be advisable to consider generally what are the successive stages through which the fuel passes from the moment it is introduced into the fuel-charging means of a gas producer.

Fig. 27 shows in a diagrammatic way the different temperature zones existing in a gas producer using bituminous coal. The air and steam blast is introduced through the grate or air distributor into the base of the producer, while the cold fuel is supplied and the crude gas removed at the top. The air and steam mixture first passes through an inert ash zone (upon which the fuel bed rests) in which it is somewhat pre-heated previous to reaching the fuel. The oxygen in the air combines practically instantaneously with the hot carbon, while the steam and CO_2 reductions take a much longer time. In many gas producers the steam reaction is not even completed when the gas leaves the fuel bed at the top, depending as we have seen upon the amount of steam added, the temperature, and the fuel depth. In the

uppermost part of the fuel bed the sensible heat of the hot gases from the lower part of the producer is utilized to distil off the volatile matter and moisture in the fuel.

One may thus speak of four zones in a gas producer :—

(1) The ash zone,
(2) The oxidation zone,
(3) The gasification zone,
(4) The distillation zone,

all of which merge into one another more or less completely.

The difficulties that may be experienced in working a producer generally take place (1) in the distillation zone, and (2) at the junction of the oxidizing and ash zones. So long as the difficulties (if any) in these respects are attended to by the designer and operator, the other zones and reactions in the gas producer will adjust themselves in accordance with the fuel, blast composition, and fuel depth.

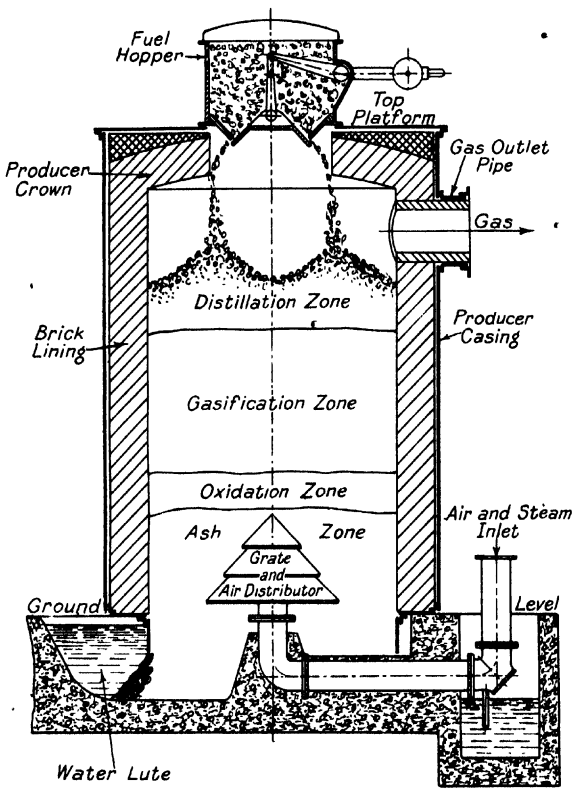

FIG. 27.—GASIFICATION STAGES IN A GAS PRODUCER.

Practically speaking, the various producer designs possess either one or more specific features affecting the treatment of the fuel at the *top* or at the *base*. Other features of producer design concern mainly the raising of steam or heating of water and means whereby the yield of by-products may be economically effected.

For the sake of clearness we may classify the producer types according to their specific features of design :—

(*A*) **Producers where ash is removed as liquid slag.**
(*B*) **Producers where ash is removed by hand.**
(*C*) **Producers where ash is removed mechanically.**
(*D*) **Producer casings and brick lining.**
(*E*) **Producers with static coal feed and hand poking.**
(*F*) **Producers with mechanical coal feed.**
(*G*) **Producers with mechanical fuel leveller and stirrer.**
(*H*) **Steam-raising and water-heating producers.**
(*I*) **By-product recovery producers.**
(*J*) **Special gas producers.**
(*K*) **Arrangement of gas producers.**

(*A*) LIQUID SLAG PRODUCERS

On pp. 117-127 we have seen that the fusing temperature of many fuel ashes may be comparatively low, and that to avoid serious operation difficulties due to clinker formation it is often necessary either to lower the gasification rate or to add steam to the air blast in such a quantity that a resulting gas, rich in hydrogen and high in carbon dioxide, is obtained.

Since in blast furnace and cupola practice the fuel ash, together with the iron and the impurities in the iron ores, is *maintained* in a molten state, and removed in such a liquid form from the furnace or cupola, many methods have been proposed whereby a similar procedure might be adopted for gas producer operation. Indeed, the early gas producer pioneers were nearly all connected with iron and steel production; for instance, the first gas producer built in France was by Ebelmen (1840), who used it in connection with a puddling furnace. In outline it was very much like a blast-furnace shaft, air being introduced at the base, while the slag was removed from a tapping hole at the bottom of the hearth. Centrally in the producer a retort was suspended which also served as a crude fuel valve.

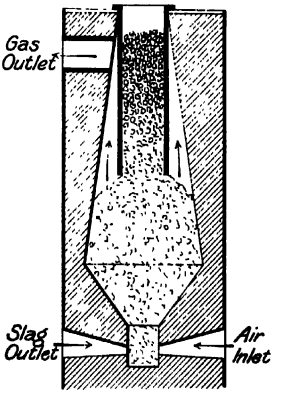

FIG. 28.—EBELMEN'S LIQUID SLAG PRODUCER.

A diagram of Ebelmen's producer is shown in fig. 28. The fuel used was charcoal, and to obtain an easily fusible slag from the ash iron furnace slag or lime was added as a fluxing or slagging medium to the fuel as charged. Ebelmen worked the producer both with and without adding steam to the air, and experienced the difficulty of the slag becoming more sticky when adding steam, unless this took place some distance vertically above the air blast inlet.

The analysis of the gas obtained in this producer when using dry blast was :—

CO_2	·5	per cent.
CO	33·3	,,
H_2	2·8	,,
CH_4	Nil	,,
N_2	63·4	,,

In other words, a gas containing carbon monoxide at practically the theoretical maximum quantity.

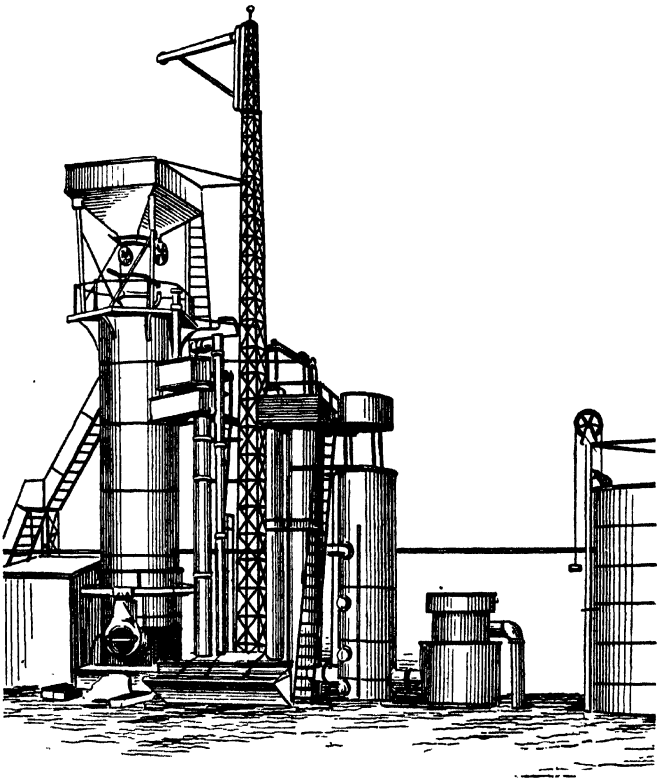

FIG. 29.—THWAITE'S LIQUID SLAG PRODUCER.

Many years expired before we again heard of liquid slag producers being worked, but, as we shall see, the general operation experiences are nearly all of the same kind as those obtained by Ebelmen.

During the years from 1880 to 1890 liquid slag producers were at work in Witkowitz, Germany, in which lime was used as the slagging medium.

In 1881 the *Transactions before the American Institute of Mining Engineers* deal

with a slagging producer built by W. J. Taylor, which was operated at Chester, N.J., U.S.A. Anthracite was used as a fuel, and 30 to 40 per cent of blast furnace slag is said to have been added to flux the ash.

About 1902 B. H. Thwaite, the well-known gas power pioneer, introduced into England his so-called Cupola Producer, which was about 6 feet diameter by 30 feet high. Fig. 29 shows a reproduction of a photograph of such a plant in operation near Leeds in 1906.[1] Using a gasworks coke containing 9·5 per cent ash, the following gas analysis was obtained when using a dry air blast :—

CO_2	·8 to 1·2
O_2	0·4 ,, 1·8
CO	30 ,, 32·4
H_2	·2 ,, ·4
CH_4	4·1 ,, 1·6
N_2	64·1 ,, 63·0

W. A. Bone (*Coal and its Scientific Uses*) refers to another of Thwaite's gas producers using a Lancashire bituminous fuel, which gave the following result :—

CO_2	2·0 per cent.
CO	29·0 ,,
H_2	5·35 ,,
CH_4	2·05 ,,
N_2	61·6 ,,

Due to the deep fuel depth allowed for, the gas left the producer in a cool state, hence at a reasonably low velocity and of constant heating value.

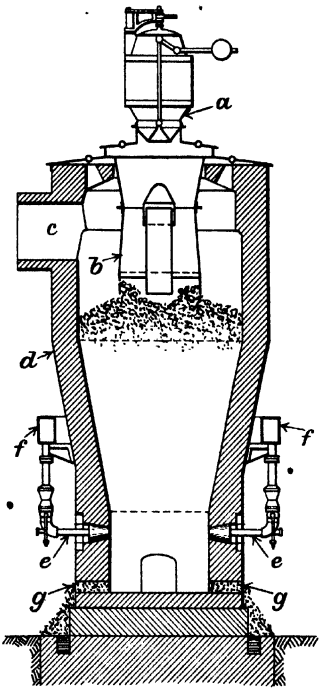

FIG. 30.—S.F.H. LIQUID SLAG PRODUCER.

The main reason for developing this type of producer was that Thwaite wanted to produce a gas low in hydrogen, so that the cold and cleaned gas could be compressed to the highest possible degree with air in gas engines without premature ignition. Coke of an even grading was preferred as a fuel, and to produce a highly fusible slag, sand, limestone, or iron ore was added in suitable chemical proportions.

In 1907 [2] the next step of development towards the modern liquid slag producer was taken by the French firm, Fichet & Heurty, together with M. Sepulchre, who placed on the market the so-called "S.F.H. Producer," which is shown in fig. 30. A battery of six of these producers was put to work at Gironcourt, France, the gas

[1] Pullon, American Inst. Mining Engineers.

[2] Hoffmann, International Congress, Dusseldorf, 1910. See also *Iron and Coal Trades Review*, July 22, 1910.

being successfully used in plate furnaces and annealing ovens, while it was claimed that less heat was lost in the liquid slag than is usually contained in the carbon removed with the ashes and clinker of an ordinary gas producer.[1]

The following are some of the gas analyses said to have been obtained when using various fuels :—

	Lignite.	Brown Coal.	Coal.	Coke Briquettes.
CO_2	2·5	1·4	1·0	1·6
CO	29·5	28·3	31·0	27·9
CH_4	3·2	7·5 (?)	6·5 (?)	2·0
H_2	6·7	7·7	6·0	1·2
N_2	58·1	55·1	55·0	67·3

Analysis of brown coal used and products obtained :—

COAL

Moisture		10 per cent.
On dry substance	Ash	37·66 ,,
	Carbon	44·41 ,,
	Hydrogen	1·36 ,,
	Nitrogen	·45 ,,
	Sulphur	6·5 ,,

SLAG

SiO_2	42·17 per cent.
FeO	1·26 ,,
Al_2O_3	18·83 ,,
CaO	20·57 ,,
MgO	12·89 ,,
MnO	0·17 ,,
S	1·72 ,,
P_2O_5	·04 ,,

PIG IRON TAPPED WITH SLAG

Carbon (comb.)	2·3 per cent.
,, (graph)	..
Silicon	1·73 ,,
Manganese	..
Phosphorus	·23 ,,
Sulphur	1·97 ,,

When it is taken into consideration that the gasification rate was very high, about 200 lbs. per hour and per sq. ft. of cross sectional area at the bosh (50 to 60 lbs. per sq. ft. of shaft area), it is extraordinary that such high contents of methane were obtained in the resultant gases.

The brickwork of the hearth wore out quickly and had to be removed once every three months, while that of the shaft did not need to be renewed for several years.

Hoffmann, *Iron and Coal Trades Review*, July 22, 1910.

It was also claimed that small coal, waste fuels, and fuels rich in ash were successfully gasified, which does not seem to have been the experience with the large scale gas producers of similar type since built in Germany and referred to later.

As will be seen from fig. 30, the producer is supplied at the top with a fuel-charging hopper, *a*, a retort or fuel-feeding bell, *b*, as well as a gas outlet branch, *c*. The gas producer body, *d*, is of a shape like the lower part of a blast furnace, the "shaft" being wider than the "bosh," where a suitable number of air blast tuyères, *e*, are provided; these nozzles are water-cooled and supplied with air from a superimposed ring main, *f*, carried from the gas producer casing. The molten slag is tapped off through the slag notches, *g*. Limestone and graded crushed blast furnace slag have been used successfully as a slagging medium.

Due to the intensity of the heat round the air tuyères a rapid wearing out of the lining takes place, and for successful work it is necessary to use such special types of refractory lining materials as are generally adopted in blast furnace practice, such as, for instance, magnesite bricks provided with external water-cooling.

In 1912 C. D. Smith [1] reports upon some preliminary investigations carried out on behalf of the Bureau of Mines in an experimental producer. In citing some of the operating details of this test producer, we shall get an idea as to the difficulties that have to be anticipated under various conditions.

The producer was supplied with two rows of tuyères, one of six at the base for the air blast, and one of four at a somewhat higher level for the steam. The air tuyères were water-cooled, as were also a $4\frac{1}{2}''$ thick layer of magnesite bricks (these were surrounded for a depth of 20″ with water coils). The air blast was supplied at a pressure of 5″ to 6″ water gauge at ordinary loads and about 16″ W.G. at the highest loads. The coke used contained 11 per cent of ash, and the best gasification results were obtained when 15 to 20 lbs. of limestone were added per 100 lbs. of coke gasified, the analysis of the coke ash and limestone being as follows :—

	Coke Ash.	Limestone.
Silica (SiO_2)	54·83	1·73
Alumina (Al_2O_3)	31·94	·93
Ferric oxide (Fe_2O_3)	7·22	·80
Calcium oxide (CaO)	2·06	52·20
Magnesium oxide (MgO)	·25	1·48
Potassium oxide (K_2O)	1·49	..
Sodium oxide (Na_2O)	1·04	..
Loss on ignition	1·19	43·28
Total	100·02	100·42

As will be realized from the analysis, the coke ash is far from being of a very fusible kind, and consequently the difficulties which were experienced with obtaining a sufficiently liquid slag might have been anticipated.

[1] "The Slagging Type of Gas Producers," U.S.A. Bureau of Mines, Tech. Paper, No. 20.

The theoretical quantity of limestone to be added to make a slag of a low fusing point from Boudouard's slag fusion temperature diagram was 4 lbs. per 100 lbs. of coke; whereas over 12 lbs. were required to continuously obtain a liquid slag that could be tapped out. When adding 25 lbs. or more limestone the slag became sticky again and thereby caused interruption of the work.

The rate of gasification was 20 to 30 lbs. per sq. ft. of fuel bed area and hour; the fuel bed was 6 feet deep, and the content of CO in the gas was about 31 per cent. Such rates of gasification are not favourable for obtaining a temperature sufficiently high for an easy melting of the slag; but, on the other hand, great difficulties were experienced in the blowing away of coke dust and lime, which in the author's opinion might have been avoided by using a deeper fuel bed, thus causing the gases to leave at a lower temperature and consequently at a lower velocity.

It was found of advantage to preheat the air blast to about 440° F., and in some tests steam was added up to $\frac{3}{4}$ lb. per lb. of coke without seriously affecting the fluidity of the slag.

Continuous difficulties were experienced in keeping the slag liquid when the producer was shut down overnight, which caused scaffolding of clinker above the air tuyères and also the formation of solid clinker at the bottom of the hearth (freezing).

During the progress of the war several large scale developments regarding this type of gas producer took place in Germany, the stated success of which undertakings would appear to predict that producers of the liquid slag type may have come to stay—in any case, in connection with gas producer plants used in the heavier class of iron and steel manufacturing trades. In the following we shall describe four of these German producers: the Wuerth, the Georgs-Marienhuette, the Rehmann, and the Pintsch type.

The Wuerth type producer,[1] a diagrammatic drawing of which is shown in fig. 31, was a development of the S.F.H. generator. It is 9 to 10 feet internal diameter at the upper end of the shaft, and about 18 feet high from ground level to platform level, and provided with both air and steam tuyères at the "bosh"; it being claimed that the introduction of some steam (about $\frac{1}{4}$ lb. per lb. of coke) above the air tuyères prevented the scaffolding which used to occur when no steam was added.

Difficulties were at first experienced with the liquefied slag "freezing" on to the base of the hearth, for which reason a gas fire was maintained below to effect an underheating of the hearth. A most substantial brick crown must be required to support the hearth and the producer charge, and the gas used for this purpose represents an additional source of thermal loss. If, however, a sufficiently large quantity of ore or slag containing iron be added to the charge as a slagging medium, a layer of molten iron is obtained below the lighter but more viscous slag. By observing this rule it was found that the underfiring could be avoided, and later Wuerth producers do not require the heating arrangements shown in fig. 31 (German patent No. 314,720).

[1] Markgraf, *Stahl u. Eisen*, 1918, p. 649. See also *Iron and Coal Trades Review*, October 1918.

The gas on leaving passes through a dust separator which at the same time may serve as an air pre-heater. The amount of dust removed from the gas is considerable, about 6 to 7 per cent on the fuel gasified, in spite of coke nuts from $\frac{3}{8}''$ to $2\frac{3}{8}''$ being used. Although this represents a most serious loss, it should not be overlooked that the producer can be worked at the extremely high rate of 60 tons per twenty-four hours, which is equivalent to about 75 lbs. per sq. ft. and hour;

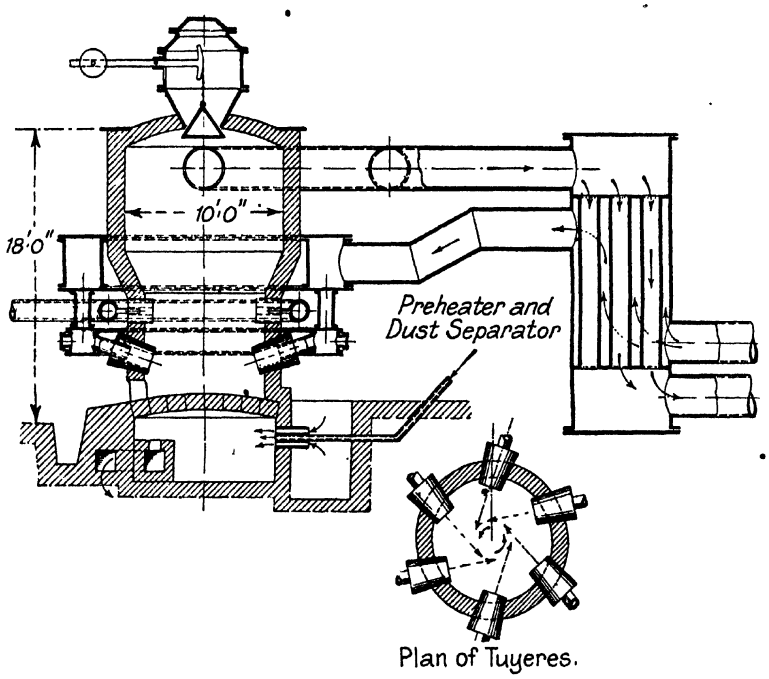

FIG. 31.—WUERTH'S LIQUID SLAG PRODUCER.

in other words, a rate of two to three times the usual rate of ordinary static gas producers of same diameter using coke as a fuel.

Two slagging holes are provided, each being opened alternately and once every two to three hours; a little iron (about 3 per cent of the slag tapped) being removed each time the slagging takes place.

Obviously, variation of the rate of working will seriously interfere with the melting and fluidity of the ash and slagging medium, but it is stated that no working troubles will occur if the gasification rate is reduced to half of the normal rate.

The Georgs-Marienhuette producer has been described in an article by Brautigam,[1]

[1] *Stahl u. Eisen*, 1918, 186. See also *Iron and Coal Trades Review*, July 5, 1918.

TABLE 62

TABLE OF CAPACITIES AND MAIN DIMENSIONS OF THE GEORGS-MARIENHUETTE PRODUCER

Gasification Rate in Tons of Coke per 24 hours.	Gas Volume in cub. ft. per hour.	Air Volume cub. ft. min.	Approximate Dimensions.					
			Shaft Diam.		Hearth Diam.	Gas Pipe Diam.	Air Ring Main Diam.	Height.
			Int.	Ext.				
			a	*c*	*b*	*d*	*e*	*h*
10-15	70,000 to 105,000	1,950	5′ 0″	6′ 9″	3′ 6″	2′ 0″	10″	13′ 0″
20-30	140,000 to 210,000	3,700	6′ 6″	8′ 3″	5′ 3″	2′ 8″	10″	16′ 6″
30-45	210,000 to 320,000	4,500	7′ 6″	9′ 3″	6′ 3″	2′ 8″	10″	16′ 6″
50-70	350,000 to 500,000	8,600	9′ 0″	10′ 9″	7′ 8″	3′ 3″	15″	19′ 6″
70-100	500,000 to 700,000	12,500	10′ 9″	12′ 6″	9′ 4″	4′ 0″	15″	21′ 0″

and is shown in fig. 32. Its main features are the same as the Wuerth producer, except that no steam is being used and that the slagging medium charged with the fuel is much richer in iron. It will be noted that underheating of the hearth is done away with, as has been the case with the later Wuerth gas producers. Instead of two diametrically opposite gas outlet pipes being provided, the gas is taken off at the top, thus leaving it more time to settle out dust before it is removed from the producer. All the air tuyères are water-cooled, and at least two slag tapping holes are provided at a level of about 8″ above the iron tapping hole. Slag is removed about once every four hours and the iron once every eight to twelve hours, depending upon the content of iron in the slagging medium, generally mixer slag or basic open-hearth slag; the quantity of iron produced per twenty-four hours varies from ½ to 1¼ tons when the producer is worked at a gasification rate of 30 tons per twenty-four hours. It is stated that the hearth brick-lining will last for about thirteen months before renewal becomes necessary.

Table 62 gives a list of capacities and main dimensions of this type of producer, from which it will be seen that even for such high gasification rates as 100 tons

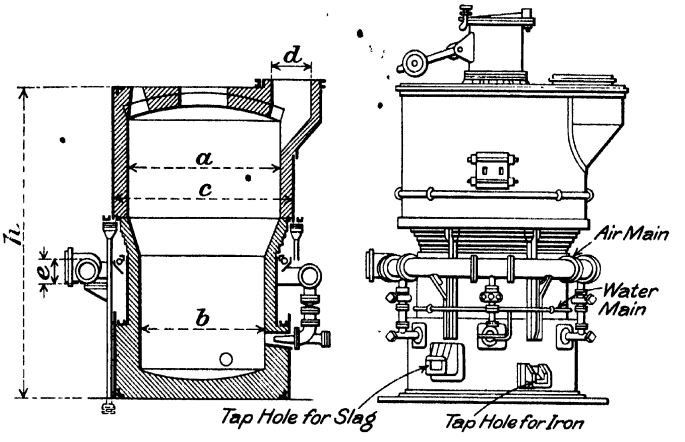

FIG. 32.—GEORGS-MARIENHUETTE LIQUID SLAG PRODUCER.

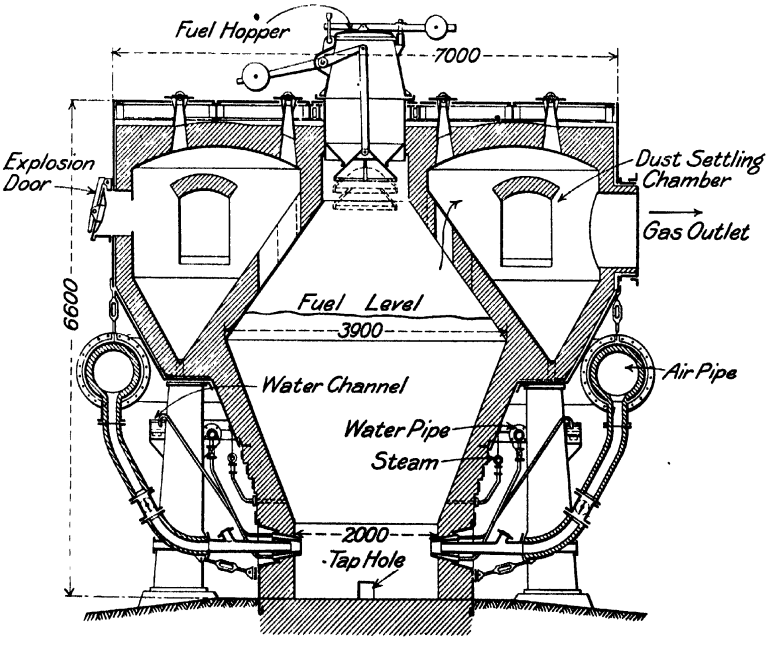

FIG. 33.—REHMANN'S LIQUID SLAG PRODUCER.

TABLE 63

(Markgraf, *Stahl und Eisen*, July 18, 1918)

	Wuerth.	Georgs-Marienhuette.
Fuel:		
Quantity gasified per diem	50	30
Carbon content in coke per cent	87·4	87·4
Hydrogen per cent	·5	·5
Moisture content per cent	4·0	4·0
Other materials per metric ton coke:		
Slag added per cent	11	17·7
Cub. ft. (N.T.P.) of air supplied	115,000	134,000
Steam added to air blast in producer per cent	32	Nil
H_2O required for hydrogen formation per cent	26·9	3·8
Cooling water per cent	2·2	7·7
Producer supplied per metric ton coke:		
Cub. ft. of gas (N.T.P.)	156,000	164,000
Dust per cent	9·6	2·4
Slag ,,	13·3	18·0
Iron ,,	·3	3·2
Temperatures and pressures:		
Temperature of air blast at tuyères ° C.	240	55
,, of hot gas leaving ° C.	700	800
Pressure loss in producer c.m. W.G.	55	33
Temperature rise of cooling water ° C.	35	35
Gas analysis:		
On dry gas: CO_2 per cent	2·0	·6
On dry gas: CO ,,	32·0	33·4
On dry gas: CH_4 ,,	·5	·5
On dry gas: H_2 ,,	7·5	·9
On dry gas: Net B.T.U. per cub. ft. (N.T.P.)	136	121·6
On dry gas: Net cals. per cub. m. (N.T.P.)	1210	1082·2
On hot crude gas: Hydrogen sulphide, grms./cub. m. (N.T.P.)	1·52	·39
On hot crude gas: Moisture, grms./cub. m. (N.T.P.)	27·8	7·9
On hot crude gas: Dust, grms./cub. m. (N.T.P.)	21·7	5·3
Thermal balance:		
Total heat in coke, steam, and air blast	106·4	101
Potential heat in cold gas	79·0	72·7
Sensible heat in hot gas and impurities	16·0	18·6
Heat lost due to carbon in dust	6·0	1·21
,, ,, in slag and iron	·96	1·51
,, ,, in cooling water	1·06	3·84
,, losses unaccounted for	3·38	3·14

TABLE 63—*continued*

SLAGGING DETAILS

	Wuerth.				Georgs-Marienhuette.		
	Si	Mn	P	S	Mn	P	S
Analysis of tap iron . . .	3·0	2·91	1·42	·07	9·27	9·25	·022

Constituent . . .	SiO_2	Al_2O_3	Fe	Mn	Ca	Mg	S	P_2O_5
Wuerth :								
Coke ash . . .	49·02	30·93	9·24	..	2·31	3·23	·96	..
Crushed blast furnace slag added . .	29·99	17·15	1·93	2·8	28·52	2·78	2·17	..
Slag tapped . .	37·0	24·3	1·61	1·34	21·11	2·2	·95	..
Dust :								
Dry . . .	44·35	27·85	5·7	1·94	8·83	1·25	2·44	..
Wet * . . .	48·1	18·2	6·19	·67	5·54	1·63	..	..
Georgs-Marienhuette :								
Coke ash . . .	35·9	25·13	19·36	..	1·52	1·07	1·19	..
Added mixer slag .	24·53	1·88	11·54	9·87	23·0	3·84	·32	4·94
,, Siemens slag .	14·0	4·4	14·0	5·09	27·47	4·76	·41	2·55
Slag tapped . .	32·33	..	1·61	4·90	21·72	..	·62	..
Dust	36·7	18·21	7·03	4·33	6·51	5·65	2·75	5·73

* The content of silica in the wet dust was considerably higher in proportion to the other mineral impurities than in the dry dust, which may be attributed to the formation of volatile hydrogen-silicon compounds, such as is also found in reference to the dust produced by the water gas process.

per twenty-four hours there is not needed a larger steel casing than about 12′ 6″ diam. × 21′ high. In other words, the ground space occupied per ton of fuel gasified is very small, compared with other gas producer types.

The working results of a Wuerth and a Georgs-Marienhuette producer as summarized and compared by Markgraf are given in Table 63.

A particular point to be noted from this table is the very high "dust loss" on the Wuerth producer. This dust was not the usual kind of more or less fine carbon particles that are obtained on other gas producers, but due to the intense rate of gasification comparatively large pieces of coke were practically "lifted"

out of the producer by the gas. The lower dust loss in the particular test referred to on the Georgs-Marienhuette producer may have been due to a smaller gas velocity, consequent upon a lower gasification rate; that this is probably so in this case is confirmed by a later statement[1] by Hermanns that the Georgs-Marienhuette

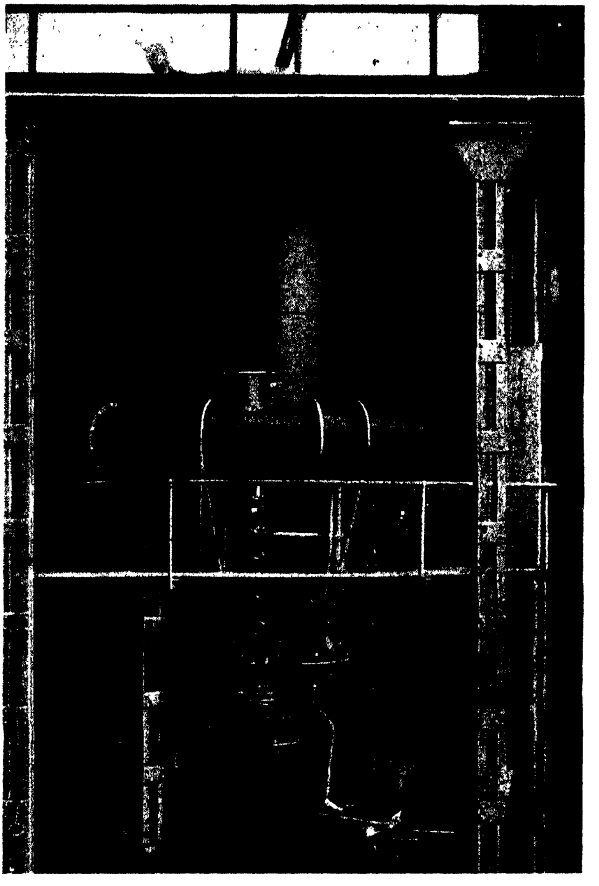

FIG. 34.—1000 H.P. PINTSCH LIQUID SLAG PRODUCER.

producer could not efficiently gasify material of finer grading than screened coke, since the dust losses became so great and efficient separation of the dust from the gas difficult.

The Rehmann type of producer, shown in fig. 33, has been designed with a

[1] Hermanns, "Liquid Slag Producers," *Z. d. V. d. I.*, May 1, 1920.

view to using finer grades of coke. The specific features of this design are (1) that the hearth area is very much smaller proportionately than the area of the top surface of the coke, it being only about one-fourth of the latter ; (2) and that above the top of the fuel bed the producer casing is extended in diameter, thus enabling a large annular dust-separating chamber to be provided for the gas before it leaves the producer. The narrowness of the hearth at the base will enable a sufficiently intense temperature to be reached to produce an easy flowing slag, while, due to the continuous increase in cross-sectional area of the producer in a vertical direction, the gas will travel at a slower speed.

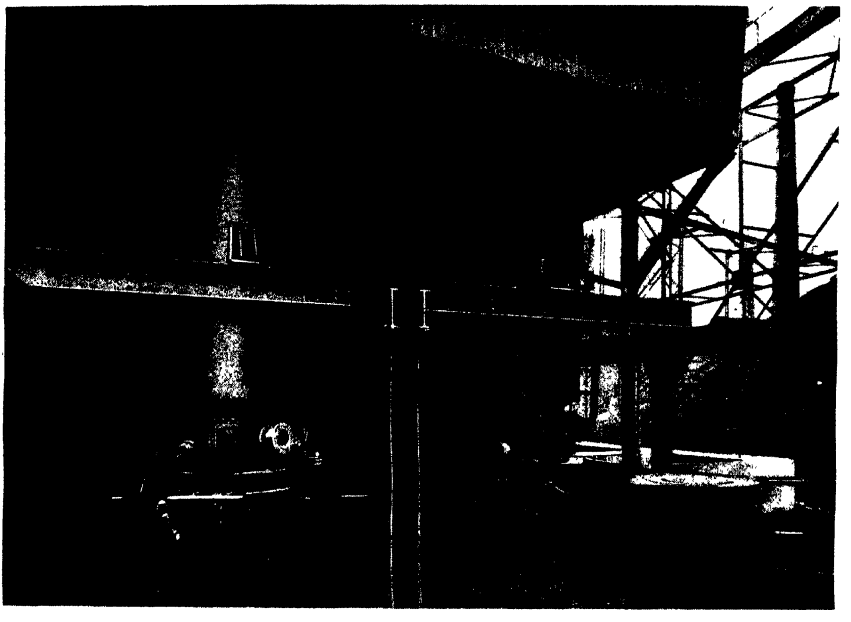

FIG. 35.—PINTSCH LIQUID SLAG PRODUCERS WITH REMOVABLE BASE.

The gas passes through slots in the "false crown" of the producer proper into the superimposed annular chamber, whereby it is caused to travel at a still slower velocity, thus settling out the bulk of the heavier dust. It is stated that the dust can be removed from the superimposed chamber and blown by an auxiliary connection on the air blast pipe into the producer again.

The firm of Julius Pintsch in Berlin builds two types of liquid slag producers, a photograph of one of which is shown in fig. 34 ; generally speaking, this type does not differ much from those previously described.

Their other type, which is especially adaptable to producers of small capacity, is illustrated by a photograph in fig. 35, while fig. 36 shows a cross-sectional elevation of the lower part of the producer.

The producer in fig. 34 was used as a spare for making gas to drive a 1000 B.H.P. blast furnace gas engine, during periods when no blast furnace gas was available at the power station. Since blast furnace gas contains a negligible amount of hydrogen, it is possible to arrange for a higher initial compression pressure of the gas and air mixture in the engine than in the case of producer gas made from a mixed air and steam blast. Gas engines which are designed for such high compression pressures as are permissible with blast furnace gas therefore often become unreliable in operation if ordinary producer gas is used, while no such unreliability is experienced with producer gas made from "dry" air.

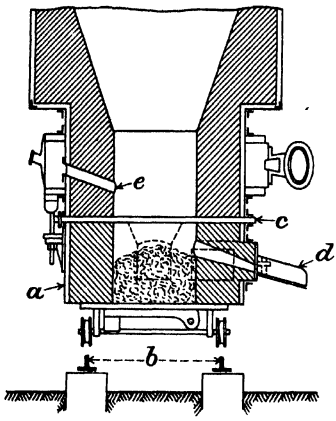

FIG. 36.—PINTSCH LIQUID SLAG PRODUCERS WITH REMOVABLE BASE.

The following are details of the operation results obtained when the producer was under test :—

ANALYSES OF PRODUCTS CHARGED

Ash in Metallurgical Coke. (Ash content 10·2 per cent.)		Iron Ore used as Slagging Medium.	
SiO_2	46·06 per cent.	Fe	27·91 per cent.
Al_2O_3	16·79 ,,	Mn	4·00 ,,
Fe_2O_3	30·34 ,,	P	1·09 ,,
CaO	2·79 ,,	$Al_2O_3 + SiO_2$	6·92 ,,
MgO	·37 ,,	CaO	12·86 ,,
P_2O_5	·73 ,,	MgO	1·16 ,,
		H_2O	6·06 ,,

ANALYSES OF PRODUCTS REMOVED

Slag (hourly tappings).		Gas.	
SiO_2	32·06 per cent.	CO_2	1·5 vol. per cent.
Al_2O_3	18·16 ,,	O_2	·2 ,, ,,
FeO	16·31 ,,	CO	32·2 ,, ,,
MnO	5·64 ,,	H_2	·5 ,, ,,
CaO	25·12 ,,	Heating value at N.T.P.:	
MgO	·28 ,,	B.T.U./cub. ft. net	111·6
P_2O_5	·53 ,,	Cals./cub. m.	993
CaS	1·16 ,,		

The air was not preheated, and *no* steam was used, the thermal gasification efficiency being about 70 per cent.

The air pressure was 1′ 10″ W.G.

The gas pressure was $1\frac{1}{2}$″ W.G.

The producer in fig. 34 was 3′ in internal diameter, which for a 1000 H.P. capacity corresponds to a very high gasification rate, but, as mentioned before, this forced driving is essential to ensure that the slag becomes sufficiently fluid.

Since the radiation losses from the lower part increase inversely with the size of gas producer, it is plain that the smaller the size of producer the more difficult will it become to maintain the slag liquid. To overcome this, to deal with ashes of high fusing point and also to meet with cases of low load periods, which would cause " freezing " of slag, the producer shown in figs. 35 and 36 has been designed.

Fig. 35 shows a battery of two such producers installed in a chemical works, where the gas, due to its high CO and low CO_2 content, is a most economical raw product for the manufacture of formic acid.

The producers are suspended from an overhead framework and provided with removable slag receivers placed on bogies, the arrangement of which is more clearly shown in fig. 36. *a* is the slag bogie arranged to run on rails *b*, *c* is a heavy asbestos joint between the stationary and the removable part, *d* the slag spout, and *e* the air blast nozzles.

The base of the producer (with its more or less fluid slag) is disconnected from the body about four times per twenty-four hours and a fresh base connected up. During the period of interchange the fuel bed is prevented from falling out by the insertion of " false grate " bars through the air nozzles—in other words, the fire is held up in a similar way to that used when clinkering water gas producers.

To prevent interruption of the gas production, an exhauster (in the cold gas main) is put into operation, while the exchange of slag bogies takes place, thus causing the producer to be temporarily operated as a suction producer.

An arrangement of this type is very cumbersome in operation and would probably require more skilled labour than the larger liquid slag producers, but from the point of view of a cheap continuous process for manufacturing practically pure carbon monoxide gas (in admixture with double its own volume of nitrogen, of course) for chemical works' use, it is a novel departure from the hand-clinkered dry air-blown small producers hitherto used for such purposes.

Summary

Having now studied the development of the design of liquid slag producers, it will be in place to discuss generally the advantages and disadvantages of, as well as the possible future field for, producers of this type.

To melt the fuel ash it is necessary to work the producers at a very intense rate of gasification, which has the advantage of smaller capital outlay and less labour per unit weight of fuel gasified; *on the other hand*, the high rates of

gasification limit the grading of fuel that can be employed due to the dust, which is carried away from the producer with the gas current.

No labour is required for "poking clinker," no mechanical parts require supervision and renewal, and the ash requires no manual effort to remove it from the producer; *on the other hand*, upkeep charges become higher, due to the repeated renewals of the special brick-lining (generally magnesite bricks) in the lower part.

The slag is free from carbon and has a higher commercial value than the ash and clinker mixture from ordinary producers, and with either ashes or a slagging medium of high iron content, pig iron (of a kind) is obtained as an additional by-product; *on the other hand*, continuous working conditions are essential to satisfactory working, and the producer becomes too expensive in cost for small gas producer plants, except where special advantages can be counted upon from a gas low in CO_2 and hydrogen.

The gas made generally leaves the producer at high temperatures; therefore where the gas is to be used in its cold state there is a considerable thermal loss.

So far as the author's knowledge goes, it does not appear as if producers with fuel depths exceeding 12 to 15 feet have been put into operation, in spite of the fact that liquid slag producers can be worked with such high air blast pressures as would be caused by increasing the fuel depth considerably. To increase the fuel depth would not only mean a decrease in the thermal loss (due to the sensible heat in gas leaving), but the dust losses would be decreased, since the gas volume leaving the producer, made per unit weight of fuel gasified, would be smaller (due to lower temperature and higher heating value).

We have seen that steam can be added above the ash-fusing zone without seriously affecting the fluidity of the slag, and perhaps the future may therefore bring us a liquid slag type of by-product recovery gas producer.

Should industrial oxygen become a commercial product for use in gas producers, as has many times been prophesied, it will be clear, in cases where the hydrogen content of the final gas is to be maintained within reasonably low limits, that the proper apparatus for manufacturing such new type of gas will be producers of a similar kind to those above described.

Fuels containing ash of a low fusing point are a constant source of trouble and uneconomical working in the operation of gas producers, and for that matter also in boilers. On the other hand, if treated in a liquid slag producer such fuels could not only be economically gasified, but, as they would melt at a low temperature, the life of the bosh and hearth brick-lining would be lengthened. Therefore in selecting the fuel which is likely to be the most suitable for use in a liquid slag producer, the chemical composition of the ash, the temperature range of its semi-plastic stage, and its viscosity at higher temperatures should be investigated. Obviously fuels with a higher ash content require a larger quantity of slagging medium added, while the type of slagging medium will depend upon the ash composition.

(*B*) HAND-ASHED PRODUCERS

The hand-ashed producers, or, as they are also called, fixed grate producers, are sometimes classified according to whether the grate and the base of the fuel bed are open to and always freely accessible from the outside ("open hearth") or not ("closed hearth"); and in the latter case, whether the separation of the fuel base and grate from the atmosphere is effected by means of a water lute or not.

It is obvious that, to enable the fuel bed base to be always directly accessible from the outside, the producer must be worked on the suction principle, be this by means of the natural draught of a chimney or by the induced draught of an exhauster.

Enclosed grates and fuel bed bases are, however, not limited to pressure type producers only, since also many suction producers are inaccessible from the atmosphere. Access to the fuel bed base of closed hearth producers is given through poking holes and ashing doors, which are opened from time to time to effect removal by hand of the ashes and clinker in a hot dry state ("dry bottom" producers), or the ashing may be effected through a water seal into which the ashes fall after passing the grate, and from which they are removed in a wet state ("wet bottom" producers).

While the open hearth type has the obvious advantage over the closed hearth type of better accessibility from the outside, a wet bottom producer has the following advantages over a dry bottom type:—

(1) Constancy in quality of the gas produced because the air and steam mixture supplied to the producer is not altered during ashing.
(2) Continuity of operation, since air blast has not to be interrupted while ashing.
(3) Any sensible heat contained in the ashes is converted into steam when the hot ashes fall into or approach the water in the lute.
(4) The water lute acts as a safety device in case of explosions.
(5) Any "drop" of fuel bed causing unburnt hot fuel to pass below the grate level will not cause damage to the steel casing and grate parts, as it is quickly quenched.

Whether the one method of ashing or producer base design is adopted or the other, most of the various examples of types of grates to be described in the following may be used in connection with open or closed hearth producers, or with wet or dry bottom producers.

The hand-ashed producers are therefore best classified in accordance with the type of grate design employed, the following being a suitable classification:—

Flat grate producers.	Circumferential grate producers.
Inclined step grate producers.	Central grate producers.
Diametral grate producers.	Duplex grate producers.

Grateless producers.

The grate designs described in the following are only to be looked upon as typical

of their kind, there being nearly as many varieties of grate designs as gas producer makers.

Flat Grate Producers

Fig. 37 shows Bischof's gas producer, which, so far as is known, was the first producer gas generator built. It will be seen that the fuel base and grate *a* is

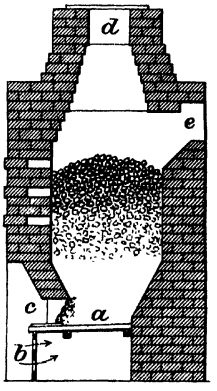

Fig. 37.—Bischof's Flat Grate Producer.

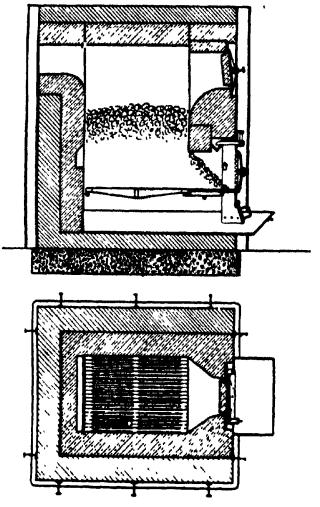

Fig. 38.—Hermansen's Flat Grate Producer.

horizontal and serves as the main support for the fuel bed; the air was sucked through the openings in the grate pit cover plate *b*, through the fuel bed, and left as gas at the outlet *e*. Fuel was fed from *d*, and a clinkering door *c* was provided just above the grate level, through which the producer content could be removed.

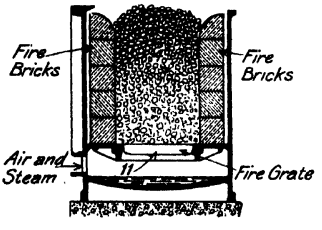

Fig. 39.—National Gas Engine Co.'s Suction Producer, Sectional Elevation.

Some modern producers of the flat grate type are shown in figs. 38 to 41.

Fig. 38 shows plan and elevation of a brick producer employed by the Danish furnace designer, A. Hermansen, when first-class gas producer coals are available for gasification, and the quantity gasified does not exceed two tons per twenty-four hours. The producer is provided with grate bars similar to those used for burning coal under boilers, while the ashes are allowed to fall into a water basin below the grate bars. Above the grate a clinkering and fuel-emptying door is provided, at the upper edge of which a small water trough is carried whereby the hearth and door are kept cool while the evaporated water passes into the fuel bed.

Fig. 39 shows a sectional elevation of the grate of the National Gas Engine Company's (Ashton-under-Lyne) suction producer, which this firm builds in sizes up to 500 B.H.P. A photograph of such a producer of 40-60 H.P. capacity, with its auxiliary plant, is shown in fig. 40. The grate is suspended from a hematite

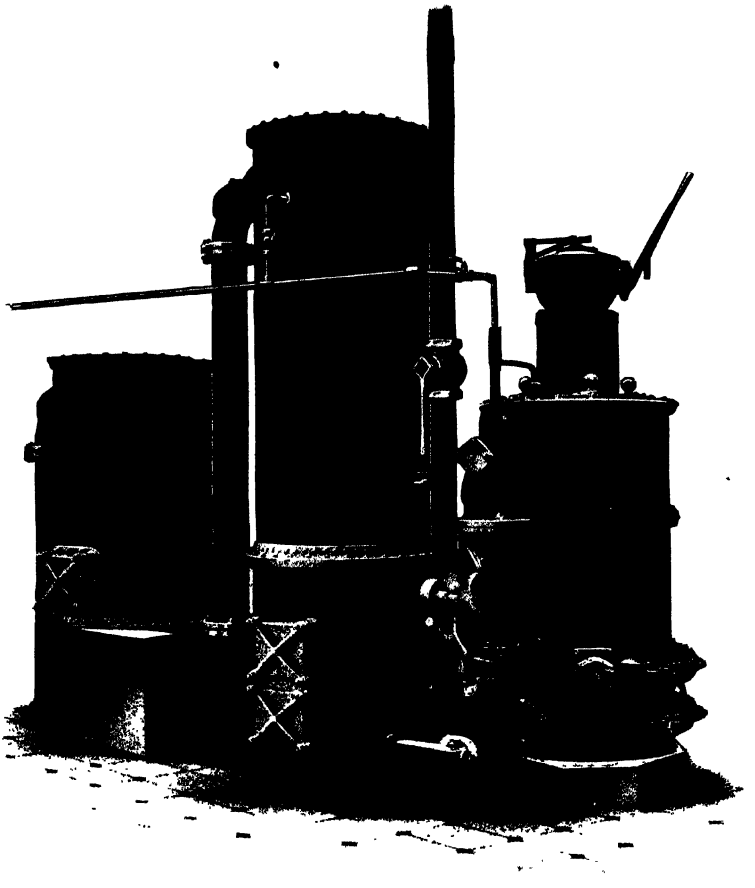

FIG. 40.—NATIONAL GAS ENGINE CO.'S SUCTION PRODUCER.

casting over a water basin, access being had through ashing doors to the space below as well as above the grate.

Fig. 41 shows plan and elevation of the grate of an American type of producer built by the Smith Gas Engineering Co. in sizes up to 300 B.H.P. The noteworthy feature about this flat grate is that the grate bars are connected to a reciprocating rod by means of which the bars can be rocked when the ashes are to be removed

from the grate. It should be noticed that the grate bars are placed some distance below the brick-lining and its conical hearth plate extension, thereby causing a part only of the air and steam blast to pass between the grate bars, the remaining part of the blast passing through the conical surface of the ash and fuel layer between the grate bars and the hearth plate.

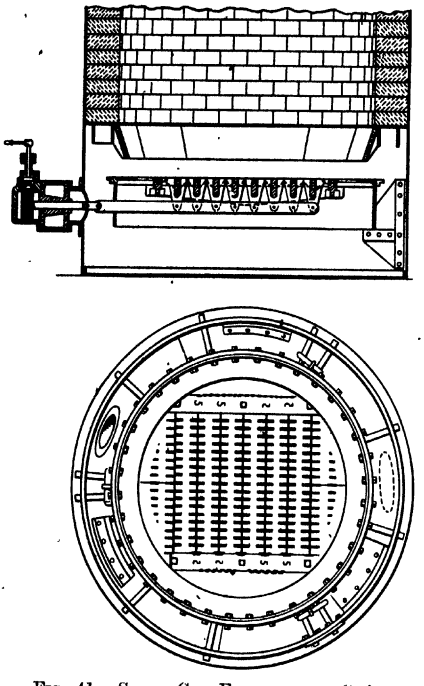

FIG. 41.—SMITH GAS ENGINEERING CO.'S SHAKING GRATE.

The type of grate bars used in flat grate producers may be single bars laid into a hearth plate just as is used in boiler practice (see figs. 38 and 39), thus enabling them to be easily removed and replaced through the ashing doors. For smaller producers, or where sufficiently large ashing doors are provided, the grate bars may be cast together in sections (see fig. 42).

Ashing, clinkering, or fuel discharging doors vary considerably in design;

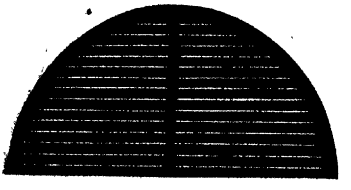

FIG. 42.—PLAN OF FLAT GRATE SECTION.

essentially they consist of (see fig. 43) an iron frame *d*, riveted or bolted to the producer casing, containing a flat machined seat, on to which fits a hinged door

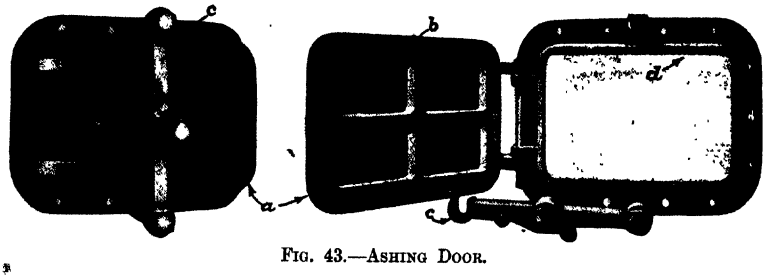

FIG. 43.—ASHING DOOR.

a, containing an asbestos joint *b*; the asbestos is generally stout cord hammered into a dove-tailed slot in the doors. The door is tightened on to its seat by the clamp *c*, which by pressing centrally on the door distributes the pressure required for making the joint evenly along the machined surface.

Inclined Step Grate Producers

Figs. 44 and 45 show diagrammatic drawings of two of the early types of Siemens gas producer. The grate is inclined to the horizontal, the advantage of the inclined grate *versus* the flat being that pokers can be inserted between the various horizontal grate bars, whereby the fuel bed is more easily controlled.

Fig. 45 is mentioned by Trenkler as having been put forward by Siemens in 1874 for the purpose of distilling and coking the fuel before it was gasified.

The Siemens producers were built of brick and tied together with steel sections. on similar lines to the furnaces in connection with which they were used. In its

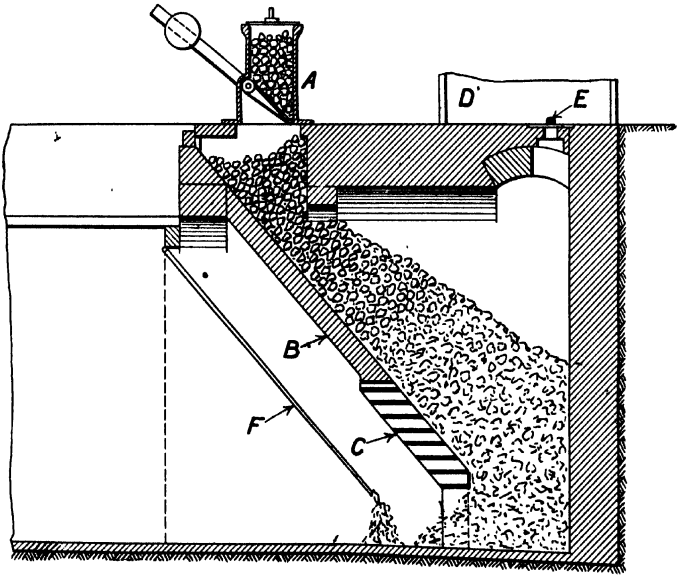

Fig. 44.—Siemens Producer with Step Grate.

essential parts the producer (fig. 44) consisted of a fuel hopper A, from which the coal was dumped on to the sloped side B of the producer, down which the fuel would slide during the progress of gasification, until it reached the grate bars C, where it would be finally burnt. The gas was removed through the outlet branch D, placed at the top of the producer ; poke holes E were sometimes provided, whereby the fuel could be poked from the top. To keep the fire bars cool and protect the men somewhat against the heat of the grate, water was sprayed on to the base of ashes, say by means of a pipe F. This method of spraying water on to the ash base or grate is common to nearly all inclined step grate producers working under suction, but obviously no large steam quantity can be raised by this means.

Many recent gas producers, especially those built into and constituting a part of

a furnace setting, or coal retorts of coke ovens, are built on very much the same lines as were the old Siemens producers; two typical examples of such modern designs are shown in figs. 46 and 47. Fig. 46 is a Hermansen type of producer used for various classes of fuels and built in sizes varying from $\frac{1}{2}$ to $3\frac{1}{2}$ tons per diem gasification capacity. The main difference between its design and that of the early Siemens is that the ashpit and grate C is enclosed by a door B, having an adjustable slide for the air inlet when working under suction, or a branch for an air blast connection when worked under pressure.

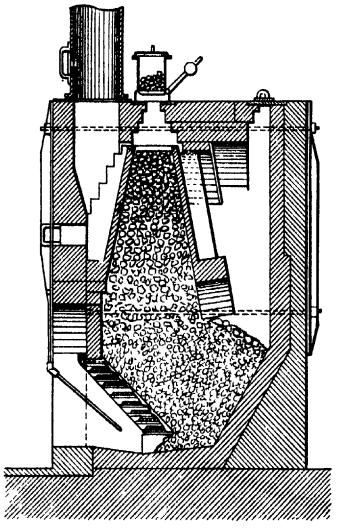

FIG. 45.—SIEMENS PRODUCER WITH STEP GRATE AND DISTILLATION RETORT.

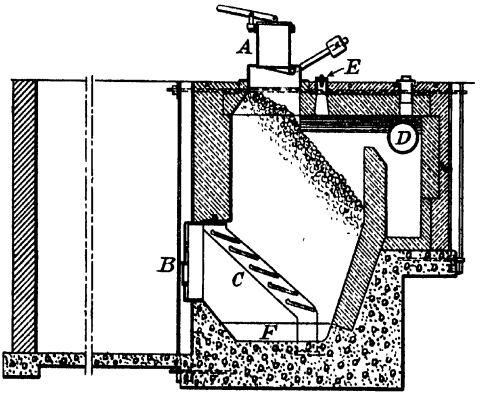

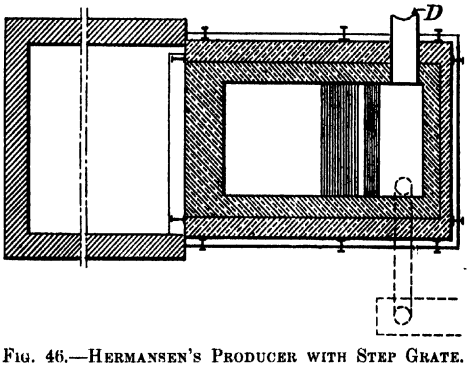

FIG. 46.—HERMANSEN'S PRODUCER WITH STEP GRATE.

Some steam is raised in the water trough F by radiation from the grate, and the heat given off by quenching the hot ashes.

Fig. 47 shows the Stein and Atkinson inclined step grate type of coke producer,[1] used for firing various kinds of furnaces. The specific feature of this producer in comparison with those already described is that a transverse wall K is built across the upper part of the producer and parallel to the grate bars, thereby isolating the gas offtake pipe D from the upper part of the fuel bed. By this means a large fuel storage chamber H is created, whereby, it is stated, it is found satisfactory to charge these producers with fuel only once per twelve or twenty-four hours, thus causing

[1] J. S. Atkinson. *Trans. Soc. of Glass Tech.*, 1919, vol. 3.

saving in labour. It will be noticed that the gas flow through the fuel bed is more in a horizontal direction than in the previously described producers. It is plain that the "depth" of fuel bed will be far more constant than that of producers into which fuel is charged at shorter intervals; thus this design will tend to yield a gas more constant in quality.

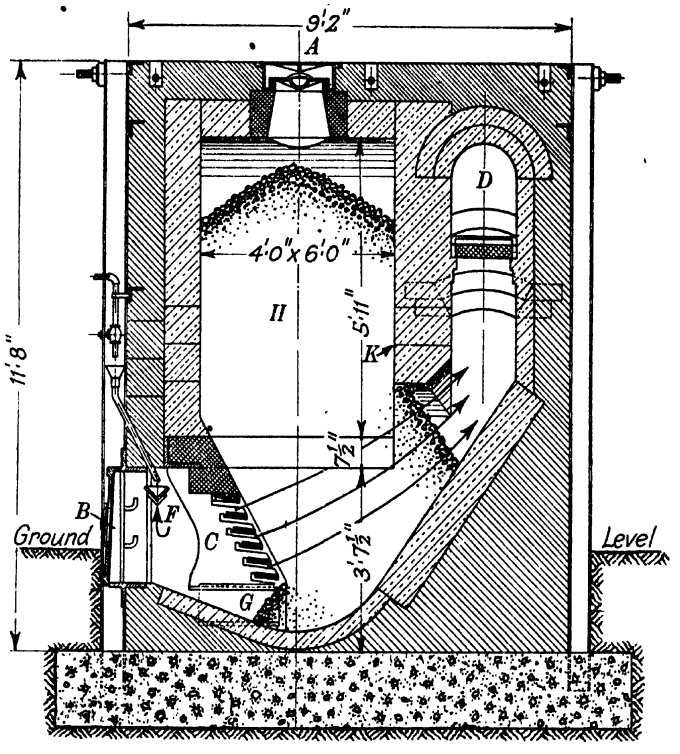

FIG. 47.—STEIN AND ATKINSON'S PRODUCER WITH STEP GRATE.

DIAMETRAL GRATE PRODUCERS

These practically all contain the salient features of the original Duff grate design, which consisted of, so to speak, two step grates inclined against one another, so as to form a roof-shaped ridge which extended right across the producer. Figs. 48 to 51 show producers of this class.

Fig. 48 shows a Duff grate built into a brick producer, attached to a gas-fired glass furnace (from Dralle, *Glass Manufacture*); it serves as an example of how the steam-pressure-blown Duff grates, with a water-luted base, were adapted to producers otherwise fitted to work on the original Siemens principle; many old furnace producers have in the past been thus converted.

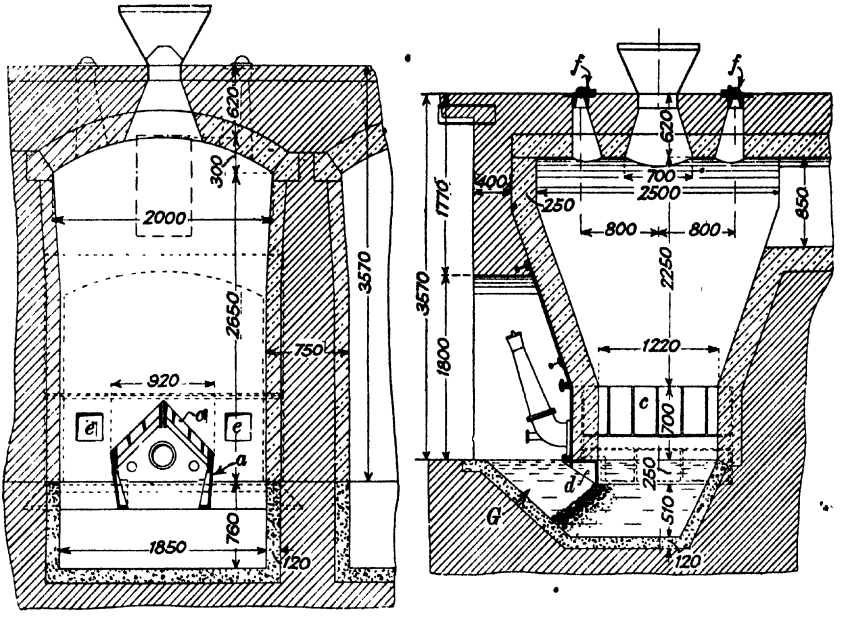

Fig. 48.—Duff's Producer.

The grate consists of several slotted grate bars *c*, which lean together at the apex of the grate and at their lower end rest on the cast-iron grate base plates *a*, which extend below the water level, similar to the producer lute plate *d*, thus isolating - - - - any air and steam blown in - - - - from the atmosphere. Ashes are removed by shovel from the concrete water lute G, without interruption of operation. Poking holes *e* enable any clinker lying on the grate to be broken loose; poking of clinker can also be effected from the top poke holes *f*.

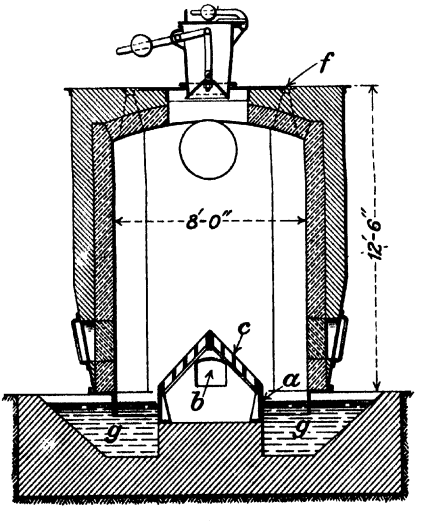

Fig. 49.—Duff's Producer.

Fig. 49 shows a modern type of Duff producer, which measures about 8 feet square in internal plan section; it is provided with vertical sides, thus enabling any clinker growth to be effectively removed by poking through the top poke holes *f*. It will be noticed that the

internal space of the grate is not open into the water lute, a concrete support being necessary to support the grate across the 8 feet span. A cleaning door enables any ashes to be removed from the internal parts of the grate, when the producer is shut down, say at week-ends. The water lute is "double ended," so as to enable ashing along the whole of each side of the grate ridge to take place

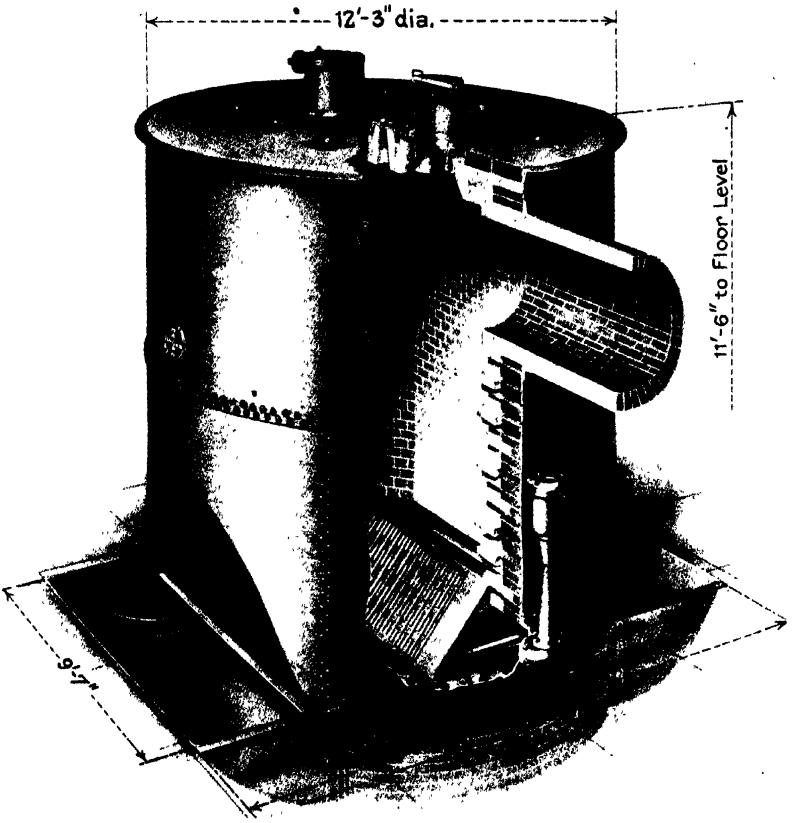

FIG. 50.—HAGAN PRODUCER.

Figs. 50 and 51 are illustrations of a large producer as built by the Hagan Company of Pittsburg, U.S.A., which give a clear idea of the parts required to make a modern producer with diametral grate. It is doubtless an advantage to have the water lute made from iron plates, although concrete water lutes are generally cheaper to construct, and if properly executed, in the author's opinion quite satisfactory in operation. It will be noticed that instead of the grate base being vertical

it is inclined in shape, the advantage gained by this being that the ashing shovel can move the whole of the ashes which form the base of the fuel bed.

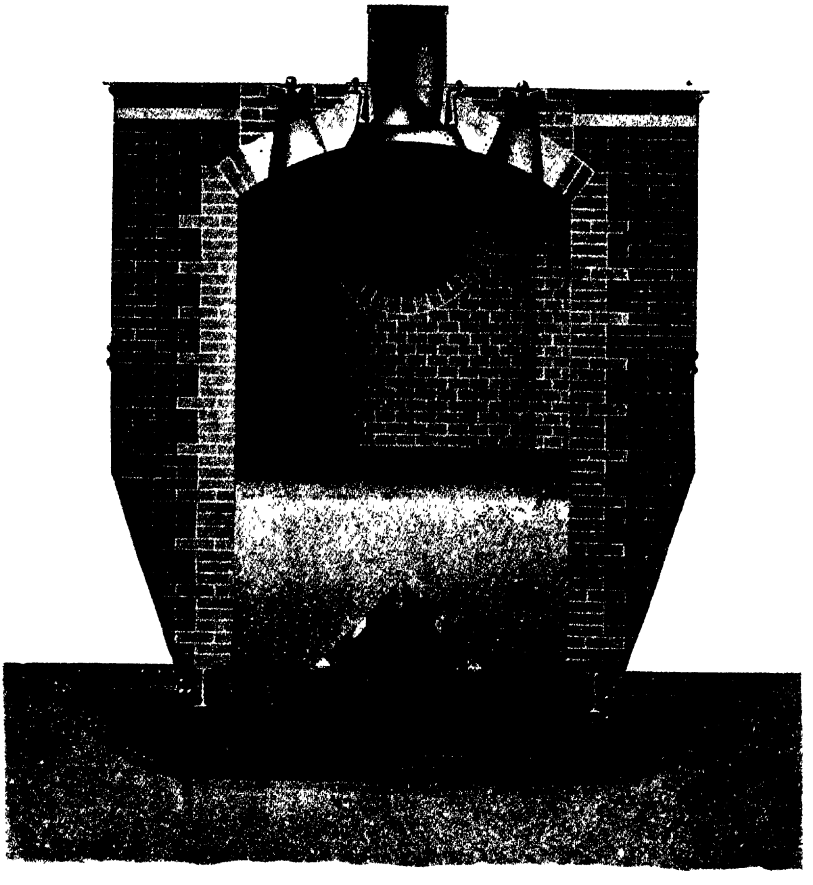

FIG. 51.—HAGAN PRODUCER.

CIRCUMFERENTIAL GRATE PRODUCERS

Practically all modern producers worked at a good rate of gasification are made circular in cross section. The obvious step to take when adapting the experience gained on the rectangular inclined grate producers to circular producers was to provide the latter with a grate that could be *seen* and which was easily accessible from the outside.

The Mond producer was one of the first of this type. From fig. 52 it will be

seen that the lower part of the gas producer was made conical, the cross-sectional area at the bottom being smaller than at the top. From a cast-iron fire bar ring

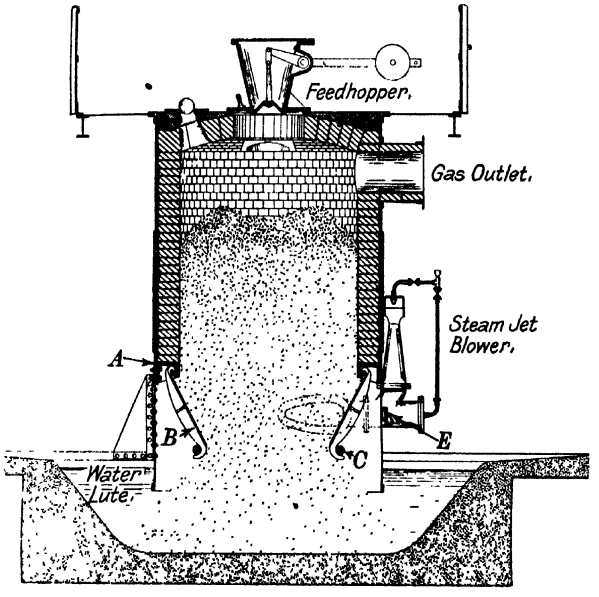

FIG. 52.—MOND PRODUCER GRATE.

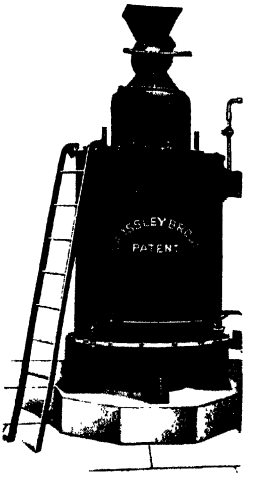

FIG. 53.—CROSSLEY OPEN HEARTH PRODUCER.

A, carried from the casing, were suspended a number of tapering grate bars B, the lower ends of which were slung round a circular bar ring C, the whole forming a suspended conical basket, through the sides of which the air blast was forced. From the central opening at the lower end of the basket the ashes were allowed to flow in a cone shape into the water lute.

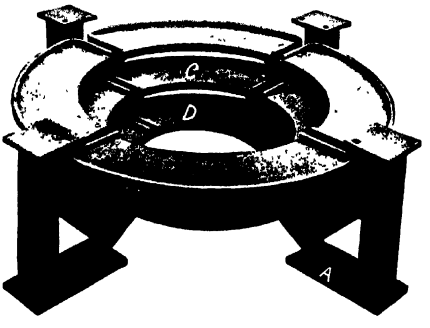

FIG 54.—GRATE FOR OPEN HEARTH PRODUCER.

From poking or sight holes E, in the producer casing proper, the grate bars and fire base were visible, and the fire could be sliced and poked from the outside without exposing the workmen to the inconvenience of having fine ashes, or gas, or fire blowing into their faces. Producers of this design have been built in sizes up to 30 tons per twenty-four hours' gasification capacity.

Figs. 53 and 54 show the "open-hearth" grate, such as is used in the modern suction-gas plants built by Messrs. Crossley Bros. of Manchester.

Except for the fact that the producer is circular in cross-sectional area, the principle of the relation of the grate to that of the fuel bed is very similar to Siemens' first producer, like which it has the advantage, highly valued by many operators, of rendering the fire directly visible and easy of access. The producer body is carried from three or more supports A, which also are provided with ledges upon which three annular ring grates B, C, and D rest, each grate bar being of smaller diameter than the one above, thereby forming a circumferential inclined step grate. Each grate ring is made in sections, corresponding to the number of supports A, and each section is provided with a ledge round its outer edges, the hollow space thereby formed serving as a series of evaporating trays, to the upper one of which water is constantly supplied (see the small taps on the water-ring main in fig. 53).

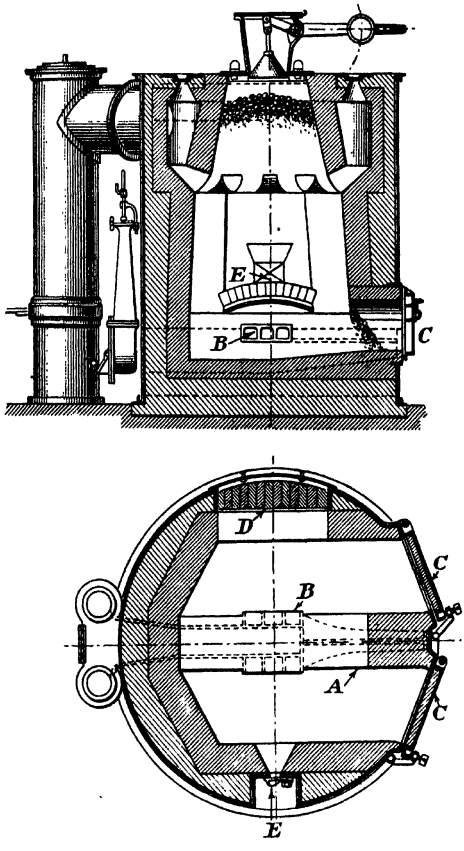

FIG. 55.—WILSON GAS PRODUCER WITH CENTRAL GRATE.

CENTRAL GRATE PRODUCERS

It is a recognized fact that the resistance to the flow of gas through a fuel bed of even thickness is always less at the outside layers of the fuel bed, because the openings between the fuel particles and the gas producer body are greater than those between the fuel particles themselves. For this reason grate designs have been developed in which the grate is placed concentric with the vertical axis of the producer, thereby increasing the length of travel for the "edge flowing" gases, and *vice versa* for central flowing gases. Although the central grates cannot be visible to the operator, the absence of any inclined producer walls, or of a step grate—either of which tends to "hold up" clinker and thereby often the fuel bed—enables a more free and unobstructed "flow" of ashes and clinker from the producer. Speaking generally, the gas quality from a producer with a central grate is likely to be more constant and steady than that produced when, say, a step grate or a circumferential grate is used.

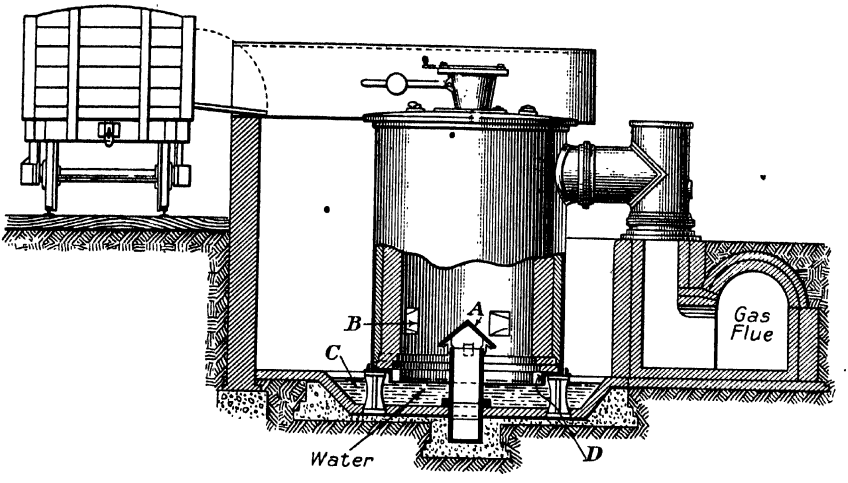

FIG. 56.—B. DAWSON'S GAS PRODUCER WITH CENTRAL GRATE.

Various typical central grate designs are shown in figs. 55 to 58.

Fig. 55 shows the Wilson producer, patented in 1876; it is of the dry bottom

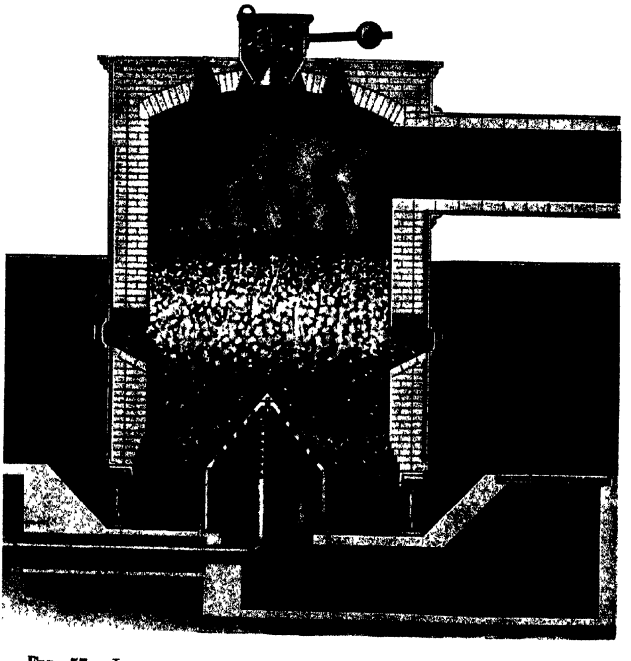

FIG. 57.—INTERNATIONAL GAS PRODUCER WITH CENTRAL GRATE.

type, while the air blast from the jet blower is introduced into the fuel through a series of "pigeon hole" openings B, arranged centrally on a brick-covered tuyère casting A which is extended right across the fuel bed. Ashes were removed through the doors C, while a large opening D, temporarily closed up with brickwork, gave access to the inside for repairs. E is a pokehole which enables poking to be done across the top level of the central tuyères.

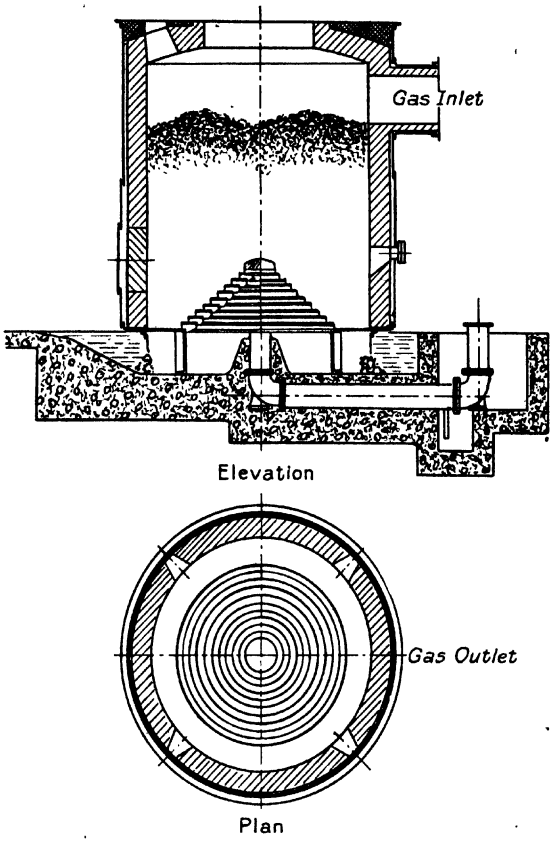

FIG. 58.—POWER GAS CORPORATION'S CENTRAL GRATE GAS PRODUCER.

Fig. 56 shows the Dawson producer patented about thirty years ago by B. Dawson; in first principles it is characteristic of most of the central blast water-luted producers sold, in later years, by various firms. The air blast was introduced through the foundations under the water lute, and discharged into the centre of the base of the producer, from the edges of a hematite cast-iron conical hood A, which also served as a cover preventing ashes from falling into the blast pipe. The producer body was carried from the foundations by means of cast-iron brackets, while a cast-iron plate D dipped into the water lute C, from which the ashes were removed by rake or shovel. A series of poking holes B were arranged level with the top of the grate hood, while the producer sides were straight in outline, thus facilitating the removal of the clinker and ashes.

It should be noticed that the air blast is discharged in bulk, so to speak, hence the distribution of the blast could not be efficient over the lower part of the producer area.

Fig. 57, which shows a design of bituminous coal producer manufactured by the International Clay Machinery Co., U.S.A., indicates how the efficiency of the blast distribution has been increased by enlarging the cone and providing it with a number of slots similar to those used in a Duff grate.

If it is a question of gasifying a fuel which burns slowly and does not alter its shape much during gasification, say anthracite, it would be necessary to make the central cone still larger in diameter. If, however, it is a question of gasifying a fuel which burns into a fine ash, such as some kinds of brown coal or peat, slots such as shown in fig. 57, for bituminous coals, would clog up.

To meet with conditions such as the above, the Power Gas Corporation, Stockton-on-Tees, build a central blast step grate, such as is shown in fig. 58. The actual angle of the grate is altered to suit various fuels, as is also the annular space between the largest grate bar and the producer lining. The grate consists of a series of annular flat hematite cast-iron rings superimposed upon one another to form a cone having circumferential horizontal slots through which the air and steam mixture is distributed to the fuel bed. The following is a list of the general dimensions and capacities of the sizes generally supplied by this firm :—

Internal Diameter of Brick-lining.	Height from Ground Level to Platform.	Diameter of Gas Outlet Branch.	Nominal Gasification Rate in Tons of English Bituminous Coal per 24 hours.
10′ 0″	11′ 6″	2′ 3″	19
9′ 0″	11′ 6″	2′ 0″	15·5
8′ 0″	10′ 6″	1′ 9″	12·5
6′ 6″	9′ 3″	1′ 6″	8·25
5′ 0″	8′ 6″	1′ 3″	5·0
4′ 0″	7′ 6″	1′ 0″	3·0

Duplex Grate Producers

Although, as stated above, producers generally burn more fiercely at the edges than at the centre, there have been cases where the centrally introduced blast does not reach and burn the fuel properly at the edges, and where the fire burns more fiercely in the centre than at the sides. To cover such cases, and get as even a blast distribution as possible, so-called duplex grate producers have been designed. These producers contain both a circumferential and a central blast supply, each of which can generally be independently controlled so that more of the blast can be introduced at the centre, or more at the circumference, as the case may be.

Fig. 59 shows the duplex blast producer built by Huth & Roettger, Dortmund, Germany. The air blast at A branches into two separate connections B and C, the former supplying a circumferential grate with downward facing air slots D_1, and the latter supplying a central grate hood with slots D_2. By means of valves, F_1 and F_2, it is possible to independently control either blast current. The ashes are removed through the water lute. Particular notice should be taken of the fact that steam is introduced at G all round the periphery of the circumferential grate, it being claimed that "edge" clinker is thereby avoided. The producer sizes supplied to this design, and their gasification rates when using various German fuels, are as follows :—

Internal diameter metres	1·8	2·0	2·4	2·8	3·0
Approximate equivalent in feet and inches	5′ 11″	6′ 7″	7′ 10″	9′ 2″	9′ 10″
	Gasification Rates in tons per 24 hours.				
A. Coal:					
Slack with 20 per cent dust and 10 per cent ash	4-6	6-8	9-11	12-14	15-16
Slack with 40 per cent dust and 20 per cent ash	3-4	4-6	7-9	10-12	13-15
B. Lignite:					
First-class lignites and briquettes	7-9	9-11	15-17	21-23	26-28
Lignite of inferior quality	5-7	7-9	11-13	17-19	21-23
C. Coke breeze or ballast	4-6	6-8	9-11	12-14	15-16

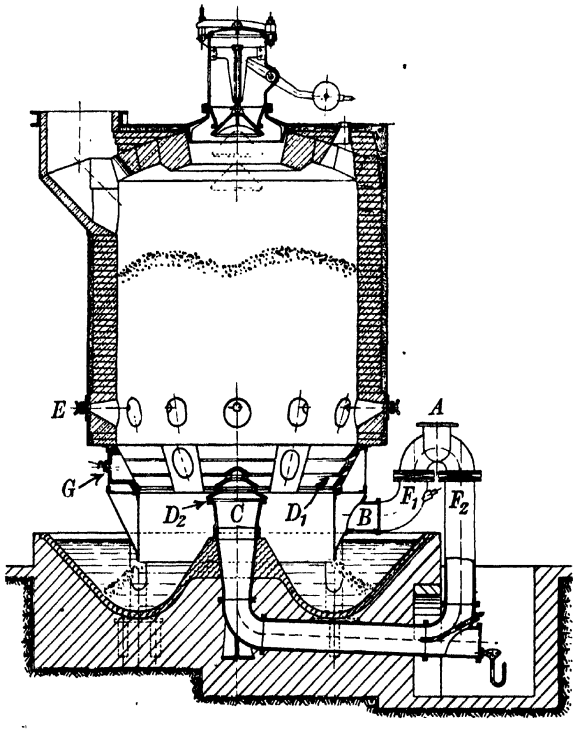

FIG. 59.—HUTH & ROETTGER GAS PRODUCER.

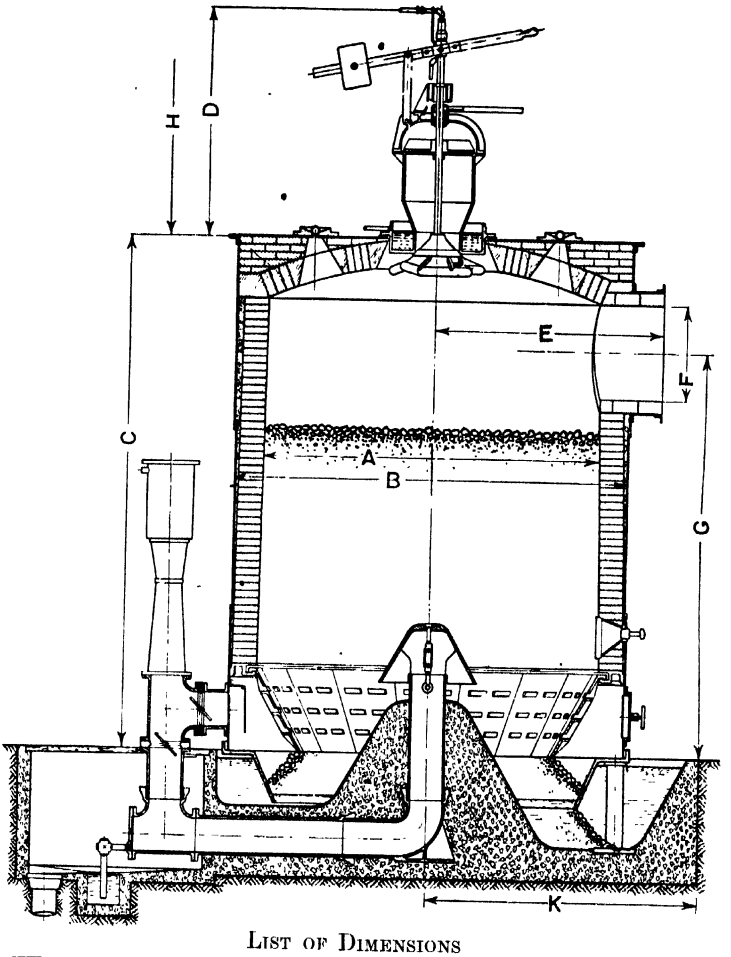

LIST OF DIMENSIONS

A.	B.	C.	D	E.	F.	G.	H.	K.	Min distance Centre to Centre.
10′ 6″	12′ 2″	14′ 0″	6′ 10″	6′ 9″	33″	10′ 9″	12′ 0″	8′ 8″	16′ 0″
9′ 0″	10′ 8″	13′ 6″	6′ 10″	6′ 0″	27″	10′ 7″	11′ 0″	7′ 9″	14′ 6″
8′ 0″	9′ 8″	13′ 0″	5′ 5″	5′ 6″	24″	10′ 5″	11′ 0″	7′ 3″	13′ 6″
7′ 0″	8′ 8″	12′ 6″	5′ 5″	5′ 0″	21″	10′ 1″	11′ 0″	6′ 9″	12′ 6″

FIG. 60.—CAMDEN IRON WORKS GAS PRODUCER.

Fig. 60 shows a duplex type producer built by the Camden Iron Works, U.S.A., which mainly differs from the one previously described in that the circumferential air blast space is open at the lower end towards the water lute, thereby causing

any ashes which might fall through the outer air slots to be removed through the water lute with the main ashes.

Fig. 61 shows the Mond-Trump duplex blast producer, which is of the dry-bottom type provided with a revolving ash table, which serves as a basis for the fuel bed; this type therefore really belongs to the mechanically ashed producers. The air blast is introduced through a horizontal pipe, which carries the central blast hood B and a flap valve A, through which air is passed to the circumferential grate C.

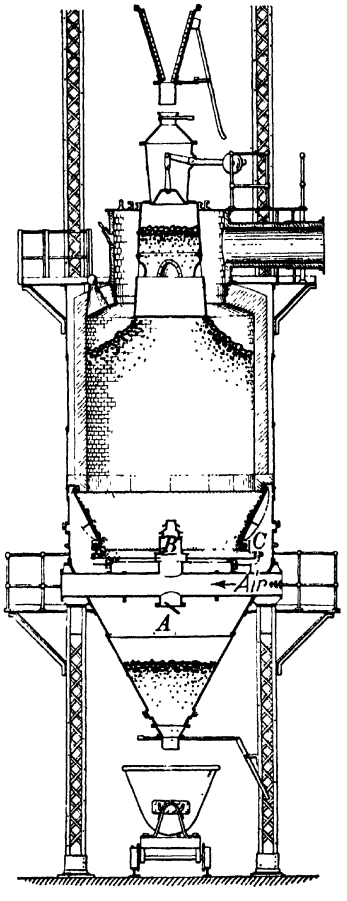

FIG. 61.—MOND-TRUMP GAS PRODUCER.

GRATELESS PRODUCERS

The fire grate of any producer will wear out, the length of life of the grate depending not so much on the design as upon the skill of the operator. To obviate this cost of upkeep grateless producers are built, one of which, the Heller gas producer, is shown in fig. 62. Of this producer, which is built in Bohemia, it is said that about 600 are at present in operation in Germany, Czecho-Slovakia, and Austria.

As will be seen, the producer is very simple in construction, it being built of bricks bound with plain iron work; the producer body is inclined towards the base, a very narrow space being left for the burnt fuel to pass; at this, the narrowest part of the producer, air slots A are provided, thus ensuring that the air will reach the central pieces of fuel; the producer is of good depth, and of large area at the top surface, and should thus be well suited both for by-product recovery purposes and for dealing with fuels of a fine grading. Fuels up to 60 per cent moisture are said to have been successfully dealt with in this producer.

The result of a twenty-four hour gasification test on a Heller producer was as follows:—

Coal gasified: 11·52 tons.
Coal analysis: 29·3 per cent moisture; 5·93 per cent ash.
Heating value: 4271 cals./kg. net (7690 B.T.U./lb.).

[TABLE

GAS ANALYSIS

	Average of 24 samples.	Maximum.	Minimum.
CO_2	5·7	7·8	4·6
CO	27·0	29·4	24·3
CH_4	2·8	3·6	1·5
H_2	18·7	19·8	16·8
N_2	46·2	48·3	44·4
Net cals./cub. m.	1542·5	..	..
Net B.T.U./cub. ft.	173·3	..	..

SUMMARY

Grate Design.—The best is the one which causes the most even distribution of the air and steam mixture and at the same time allows for ashing and clinkering in an economical way. For producers that are working under continuous operating conditions, the grate adopted should be one that allows for ashing without causing an interruption in the manufacture of the gas.

The fact that the Heller producers have proved themselves successful in work shows us how effective the most crude form of grate can be, so long as the other parts of the producer are properly designed.

Grate Area.—By this is meant open spaces in the grate through which air and steam flow. For producers working under natural draught conditions the grate should be made of ample dimensions, and enable as much of the fuel surface as practicable to be exposed to the inflowing air current. For producers working under pressure the grate area can be curtailed considerably, always provided the openings in the grate allow for a good distribution.

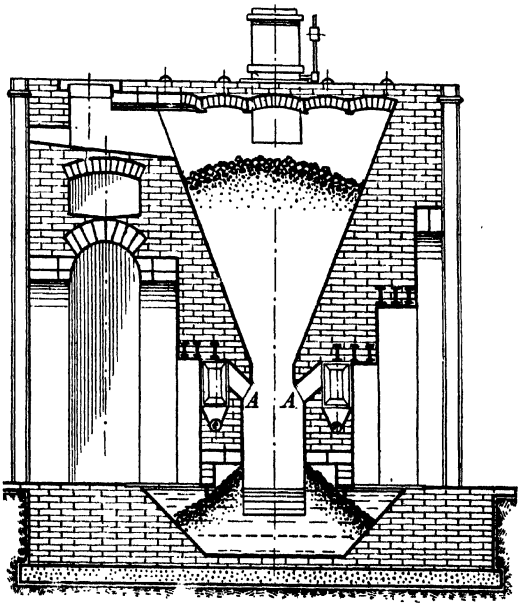

FIG. 62.—HELLER GAS PRODUCER.

Scope of Use.—For works requiring only one unit of a large gas producer, or several units of smaller ones, the hand-ashed type will be found the cheapest both

in first cost and operation, when a reasonably good-class fuel is available. Hand-ashed producers do not need fitters to see to their upkeep, or inspect and repair mechanical parts.

For works requiring the supply of producer gas intermittently, *i.e.* when this is a spare supply to some other gas, or say the producer plant is shut down at nights, the hand-ashed type will generally be found the most economical.

(*C*) MECHANICALLY ASHED PRODUCERS

For works where large quantities of fuel have to be gasified, and where higher initial capital outlay is easily counterbalanced by the advantages gained by a supply of regular and high quality gas, or for works which have to deal with clinkering and ash-rich fuels, the mechanically operated producers have a large field. In estimating the apparent improvement in working results which in many instances has followed the replacement of old static producers by mechanically ashed producers, a proper allowance should, however, be made for the possibly bad condition of the old producers, and the whole of the improvement should not always be credited to the mechanical grates.

The first mechanically ashed producer was one patented by A. Wilson of Stafford, England (1882), and is shown in fig. 63. It was a modification made to the Wilson gas producer (fig. 55), and consisted of a steel trough or water lute A into which the lower end of the producer body C was suspended, the body being supported on stout cast-iron columns D. A helical propeller B was revolved at a slow speed, thereby forcing the ashes over the ledge of the lute A, wherefrom they dropped into a bogie E.

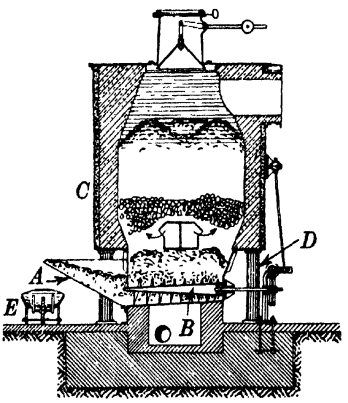

FIG. 63.—WILSON'S ASH SCREW CONVEYOR.

In 1883 and 1886 another Englishman, E. Brook, put forward a producer with a revolving central conical grate with spiral top.

The next development was that of the American, W. J. Taylor, who in 1889 patented a producer in which the base of the fuel bed rested on a table which was revolved. A modern anthracite suction producer, such as now built by the Camden Iron Works, U.S.A., is shown in fig. 64. This producer does not differ in its first principles of design from the original Taylor design, and is representative of a type of which a very large number have been in successful use in U.S.A. on bituminous coal and anthracite.

The ash table 1 is supported from a ball race 3 and made to revolve by means of the conical rack 4 and pinion 5, driven from outside the producer casing through a set of speed-reducing gears 7. By adjusting the "finger" 2, the amount of ashes removed can be varied, while the ashes displaced from the table are

from time to time removed by hand through the door 6. For very large producers,

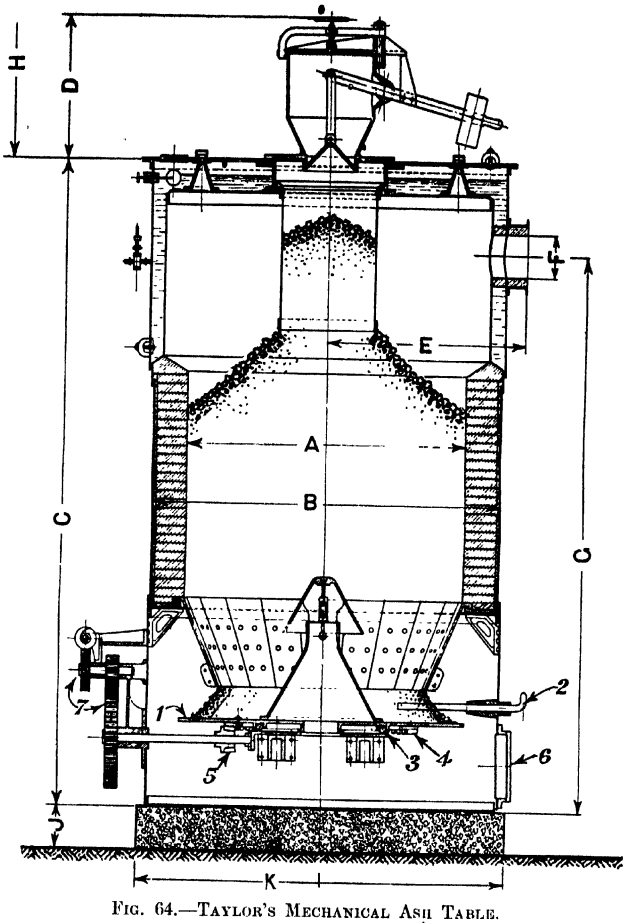

FIG. 64.—TAYLOR'S MECHANICAL ASH TABLE.

LIST OF ANTHRACITE SUCTION PRODUCERS, 250 TO 500 H.P.

H.P.	A.	B.	C.	D.	E.	F.	G.	H.	J.	K.
250	6′ 3″	7′ 11″	15′ 3″	3′ 5″	4′ 6″	12″	13′ 4″	11′ 0″	12″	8′ 1″
300	7′ 0″	8′ 8″	15′ 3″	3′ 5″	4′ 10″	14″	13′ 3″	11′ 0″	12″	8′ 10″
400	8′ 0″	9′ 8″	16′ 0″	3′ 5″	5′ 4″	16″	13′ 10″	11′ 0″	12″	9′ 10″
500	9′ 0″	10′ 8″	16′ 0″	3′ 5″	5′ 10″	18″	13′ 9″	11′ 0″	12″	10′ 10″

and fuels rich in ash, producers of this kind are provided with a conical ash pocket at the base (see fig. 61), from which the ashes are discharged into a truck.

The shape of the centrally placed blast hood of the Taylor producer which

revolves inside the ashes is not such as to maintain the lower contents of the producer in a slow movement, nor does its motion tend at the same time to crush any clinker formed. By arranging the plane of the ash table on an incline to the producer axis, Kitson (1897) obtains an agitation of the ash zone.

The essential feature of this producer (fig. 65) was that the ash table 1, upon which the whole producer charge rested, was inclined to the axis of revolution, as was also the blast hood 2; the revolution of the inclined ash table was effected by aid of the worm and worm-wheel 3 suspended below the bottom plate of the gas producer; the air and steam mixture was not only blown into the fuel bed through the openings in the central blast hood 2, but also through a number of narrow slots in the base plate. On revolution the blast hood would cause a stirring of the central parts, while the fuel at the edges would be lifted and lowered alternately. In other words, the whole of the lower part of the fuel bed was to be kept in constant motion. To prevent clinker fusing on to the brick lining this was substituted by a water jacket 5.

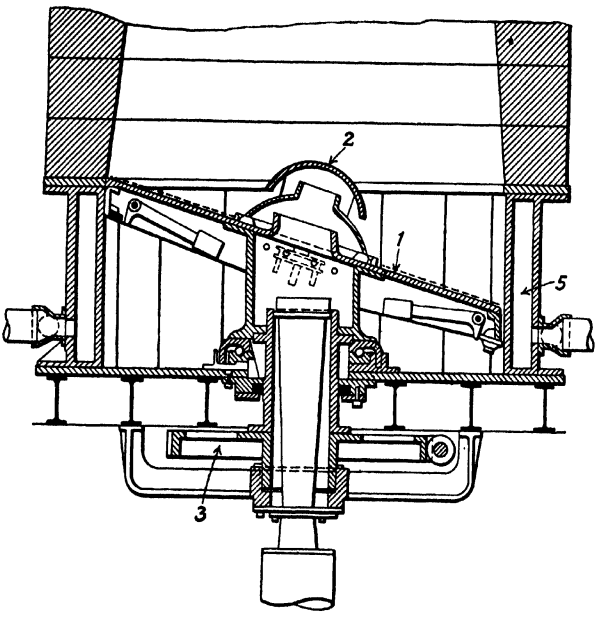

FIG. 65.—KITSON'S INCLINED MECHANICAL ASH TABLE AND GRATE HOOD.

The first real industrial success of a mechanical grate gas producer was achieved by A. von Kerpely of Austria (1903 and 1904), and practically every mechanical grate gas producer now on the market in Europe is, in its first principles, a Kerpely producer. Whereas very little development and use has been found for producers of this class in U.S.A., the progress of its use in Europe has been rapid, especially in Germany, where many different grate designs continue to appear.

Fig. 66 shows a sectional elevation of a Kerpely gas producer, which in its main principles consists of an internal (not exactly central) grate A, which is mounted on the base plate B of a water lute or ash bowl, which in its turn is arranged to revolve on a ball race C, the drive being effected by a worm and worm-wheel G. The water-jacketed producer body D has its lower end suspended into the water lute by means of bent columns E. Ashes are discharged by the shovel F in a similar way to the

discharge from an edge runner mill. The shovel is generally made of two parts, a back plate riveted on to the lute plate of the producer and a movable shovel, say 10″ wide by 1″ to 1¼″ thick, which, by means of a screw and handwheel, is caused to slide up and down in guides provided on the back plate.

Air can be supplied by a duplex system of blowing to either the air slots in the centre part, or to the slots in the outer parts of the grate, two independent air supply pipes being provided for this purpose, the pipe H supplying blast through the pipe shown dotted to the central part, while another pipe supplies air to the blast pit J. The internal blast supply, which is fixed to the revolvable ash pan, is isolated from the stationary blast pipe by a water lute K, while another isolation lute L is provided for the external blast supply. During revolution a certain quantity of fine ashes is pressed through the air slots in the grate, and accumulates in course of time in the blast pit J and the central air supply pipe. From time to time the ashes are cleared out through the doors M and N; during such periods (say at week-ends) the producer must be out of operation.

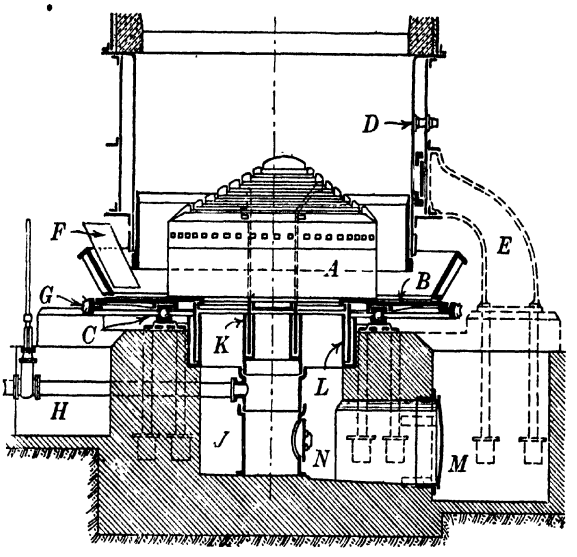

Fig. 66.—Kerpely's Mechanical Grate Gas Producer Elevation.

As will be seen from the sectional drawing and plan view of one design of a Kerpely grate, shown in fig. 67, it has a polygonal oblong base with vertical sides, upon the top of which is placed an unsymmetrical (or eccentric) pyramid made up from a series of hematite iron segments, about 1¼″ thick, built on top of one another and held together with a central bolt. Each grate segment is interlocked with the two adjacent ones, so as to form a rigid structure.

The Kerpely producer is built in England by Messrs. E. G. Appleby & Co., London, a photograph of one of whose installations is shown in fig. 68. This plant has successfully used belt pickings from a North Staffordshire colliery, so-called "batts," which is a mixture of coal and shale, *i.e.* a very ash-rich fuel.

A comparative test between Messrs. Appleby & Co.'s Kerpely producer and a fixed grate producer was carried out with the following results :—

Fuel Analysis :—Fixed carbon, 42·03 per cent; vol. hydrocarbons, 23·65 per cent; sulphur, 2·42 per cent; ash, 23·90 per cent; moisture, 8·0 per cent.

GAS ANALYSIS

	Kerpely Producer.	Fixed Grate Producer.
CO_2	2·94 per cent.	11·0 per cent.
CO	25·42 ,,	17·5 ,,
CH_4	3·26 ,,	2·75 ,,
H_2	8·96 ,,	9·0 ,,
Total combustibles	37·54 ,,	29·25 ,,
Moisture in grammes/cub. m. gas	33·6 ,,	46·5 ,,
Carbon content in ashes	7·0 ,,	17·0 ,,

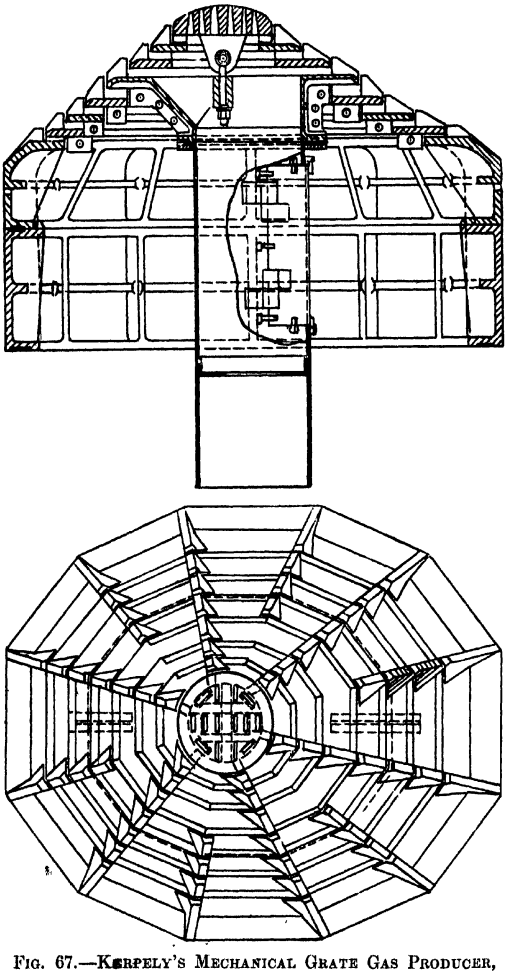

FIG. 67.—KERPELY'S MECHANICAL GRATE GAS PRODUCER, DETAIL OF GRATE.

These test figures do not show all the advantages of using a mechanical grate, for *less* steam can be used, especially when the producer has a water jacket preventing the adhesion of clinker to the walls.

Messrs. Stein & Atkinson, London, build the gas producer shown in fig. 69. This producer is provided with a symmetrically shaped grate made up from a series of rings superimposed upon one another to form a conical step grate, the axis of which is placed eccentric (say 3″ to 4″) to the axis of revolution of the revolving ash pan. In this respect the grate design corresponds to that first patented by Kerpely. A notable feature of the S. & A. producer is that the grate base is provided with a series of radial projections, and that the lute plate of the producer body, besides being of larger diameter at the base than at the top, is provided with a series of indentations. It is claimed that, by this irregularity in shape, clinker is broken up and crushed better. The ashes are discharged in the ordinary way by means of an adjustable shovel.

The Power Gas Corporation, Stockton-on-Tees, build the Lymn-Rambush producer, a sectional drawing of which is shown in fig. 70, and a photograph in fig. 71. This particular grate A is symmetrical in shape, and placed concentric to the axis of revolution of the ash pan, thereby, it is claimed, preventing unbalanced stresses being set up in the ash table, with the result that a longer life will be given to the mechanical parts.

To achieve the main object of a mechanical grate, namely, to keep the lower parts of the fire in a constant though very slow motion, the Lymn-Rambush grate is made of irregular (although symmetrical) outside surfaces. The top surface is made of several hematite iron sections of broken spirals D, whereby on revolution (in the direction indicated) the lower part of the fuel bed is maintained in a state of continuous but very slow vertical movement, while the ashes flow freely down a

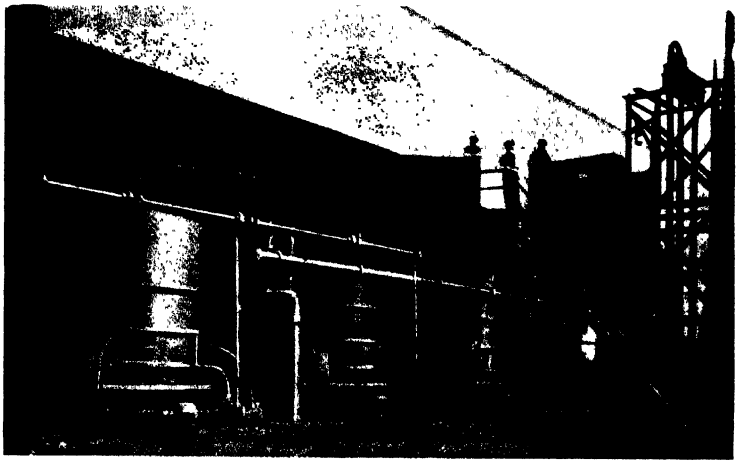

FIG. 68.—PHOTOGRAPH OF BATTERY OF KERPELY PRODUCERS.

series of interlocked grate bars E, the openings between which, so to speak, always "move away" from the fuel, thus preventing clinker or ashes accumulating and clogging up the ambushed air parts of the grate. The outer vertical surface of the grate F is made uneven in shape, so that there is also a tendency to crush the clinker against the producer sides previous to their discharge into the outer annular space of the ash bowl B.

A gas producer does not always burn evenly at all parts of the circumference, and to effect a removal of the ashes more quickly from those parts where the burning is quickest a series of auxiliary "ash ploughs" G are provided which convey the ashes from inside the producer to the outer space of the ash bowl, whence they, in their turn, are discharged by the main ash shovel C, of which there is only one. The ash bowl of the producer illustrated is not supported on ball bearings, but on larger rollers, thus making the underside of the ash bowl and the internal blast pit more accessible for inspection and eventual repairs.

The drive of the ash bowl is effected by means of a worm and friction wheel, the latter being operated by a small steam jigger, the steam from which is exhausted

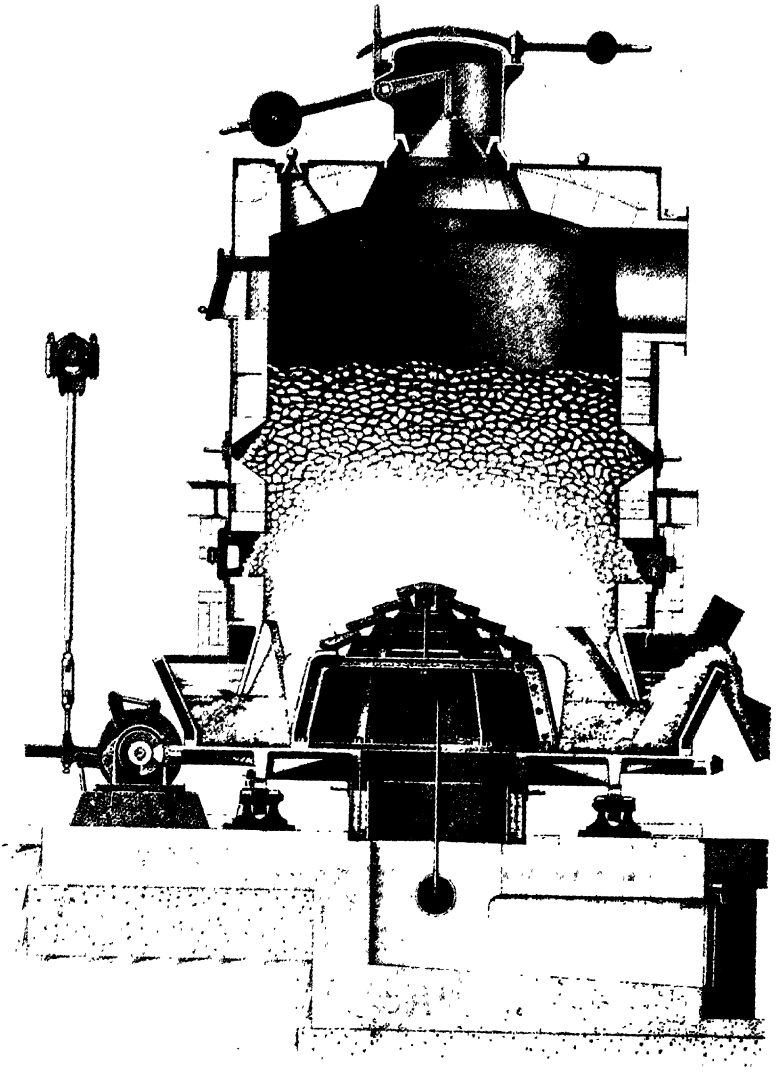

FIG. 69.—SECTIONAL ELEVATION OF STEIN & ATKINSON'S MECHANICAL GRATE PRODUCER.

into the producer air blast. By this means the cost of the power for driving the mechanical grates, which is generally about one B.H.P., is eliminated.

The gasification results on page 176 show the average maximum and minimum contents of gas components obtained from tests on a 10′ producer, taken twice per day during a period of two weeks.

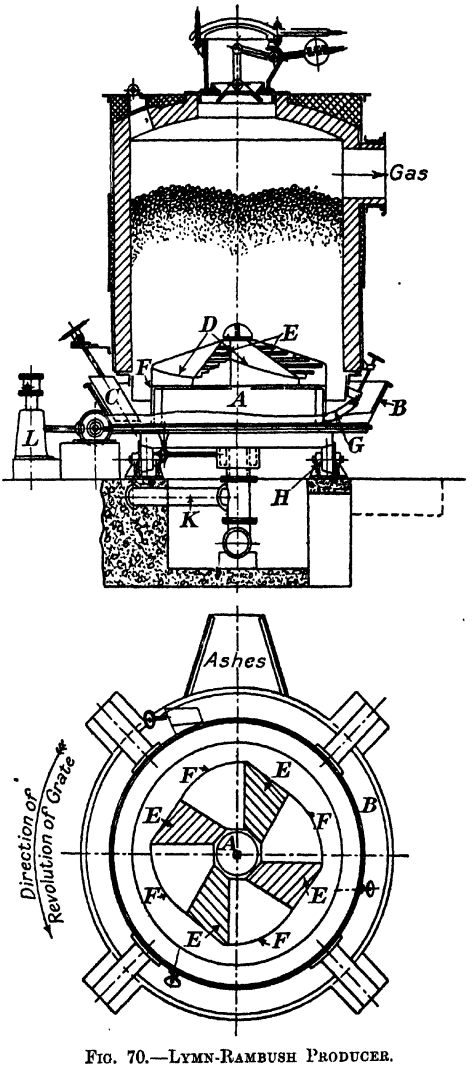

FIG. 70.—LYMN-RAMBUSH PRODUCER.

Regarding the *German* types of mechanical grate gas producers, we cannot describe the details of each here, but can only give illustrations of and a short description of a certain number.

Rate of Gasification.	18 cwts. per hour.		
Fuel analysis :	Per cent.		
Fixed carbon	61·2		
Volatile matter	32·6		
Ash	4·1		
Moisture	4·5		
Gas analysis :	Average.	Maximum.	Minimum.
CO_2	4·9	5·5	4·1
CO	27·2	28·5	25·6
CH_4	3·7	4·2	2·7
H_2	14·9	16·4	12·1
Total combustibles	45·8	..	..
Carbon content in producer ashes	..	9·2	..

The Ehrhardt and Sehmer mechanical grate producer is shown in fig. 72. Its main features are a plain concentric conical grate (made up from annular rings) placed about 4″ eccentric to the axis of revolution of the grate; the ash pan is

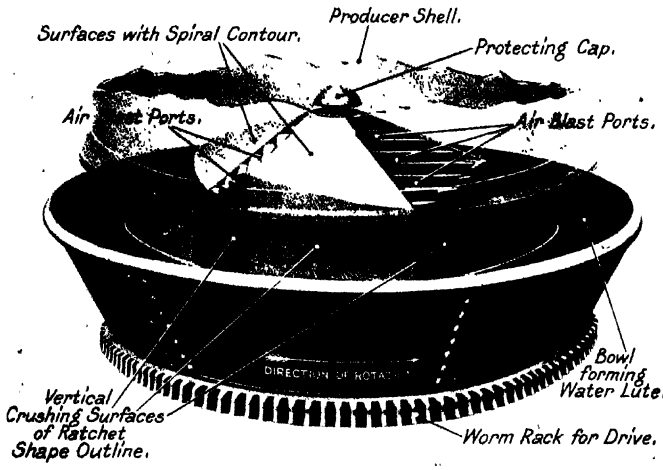

FIG. 71.—LYMN-RAMBUSH GRATE.

mounted on roller bearings, a detail of which is given in fig. 73. They consist of two rollers, each about 10″ in diameter (with bronze bushes), arranged to revolve, one on a horizontal and the other on a vertical shaft. Thus the rollers not only carry

the weight of the ash bowl and superimposed content, but they also serve to maintain the revolution of the track in a true circle.

The Pintsch producer grate has a cylindrical central base on top of which is placed an unsymmetrical cone; it is shown in fig. 74, which also gives a good idea as to the pawl and ratchet driving mechanism, arranged to be operated from an eccentric on a line shafting running about 45 R.P.M. It should be noticed that the worm driving gear, as well as the ash bowl supporting rollers, are mounted on one common bed plate, thus making all the stresses self-contained, which is essential in case the foundations are not strong enough to resist these.

The results of gasification tests made on such a producer, about 9′—10″ in diameter, are shown in the table on page 178.

Fig. 75 shows the Thyssen type grate, which is a very plain and simple arrangement of an eccentrically placed conical grate. By providing the side-thrust rollers above the level of the worm wheel, both they and the lower carrying rollers become easier of access.

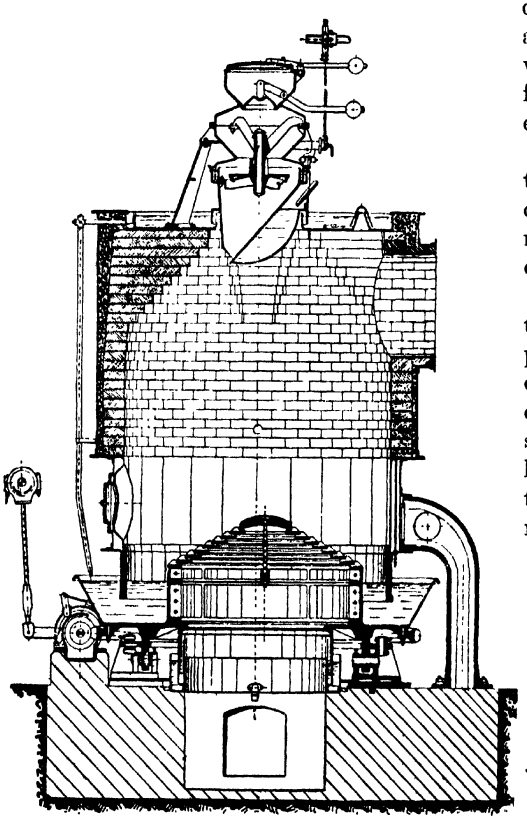

FIG. 72.—EHRHARDT & SEHMER PRODUCER.

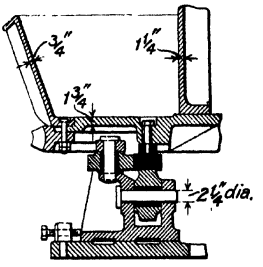

FIG. 73.—DETAIL OF DOUBLE ROLLER BEARING.

Fig. 76 shows the Rehmann type of mechanical grate gas producer, some of which were put into operation in this country previous to the war. The special feature of this type is the method of agitating the base of the fire, which is effected by four separate cone grates which are joined together, one large one (A) being in the centre and three smaller ones (B) placed symmetrically round it. To ensure

Type of fuel . . .	Westphalian bituminous nuts.	Mixture of run of mine from three collieries containing dust below 5 mm. = 39·5 per cent.
Analysis of fuel . . .	Moisture . . 1·48	1·30
	Volatile matter . 27·14	22·50
	Fixed carbon . 64·30	60·05
	Ash . . . 7·08	16·15
Gasification rate. Tons per twenty-four hours . .	21·05	14·1
Gas analysis . . .	CO_2 . . . 3·5	4·5
	CnHm . . . 0·3	0·2
	O_2 . . . . 0·0	0·0
	CO . . . 27·4	26·1
	CH_4 . . . 2·7	2·4
	H_2 . . . . 11·8	11·7
Moisture content of gas, grammes per cub. m. .	33·0	30·8
Blast pressure, mm. W.G.	123	92
Gas pressure, mm. W.G. .	29	29

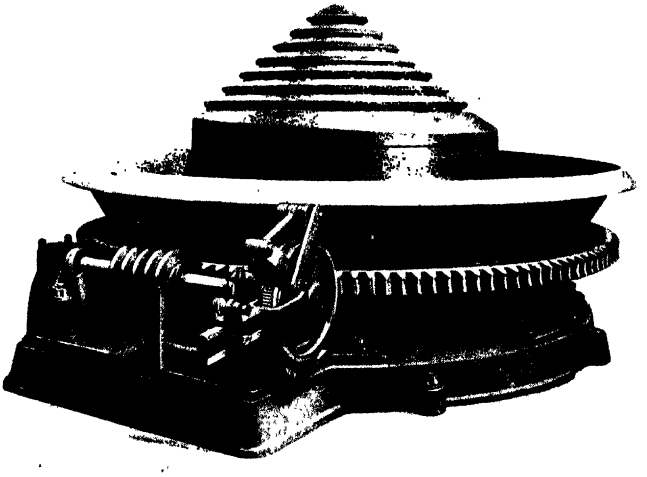

FIG. 74.—PHOTOGRAPH OF PINTSCH MECHANICAL GRATE.

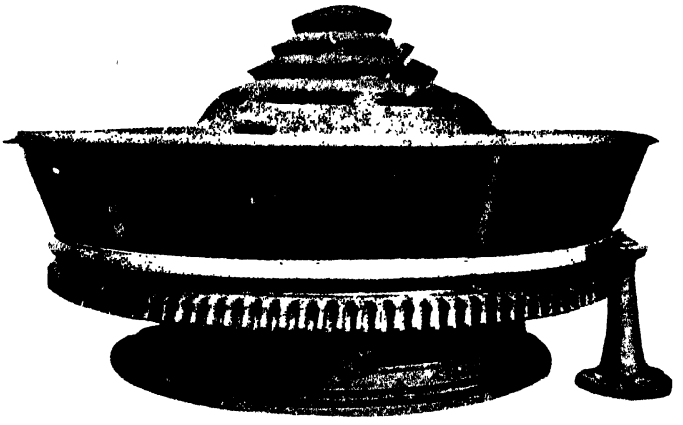

FIG. 75.—PHOTOGRAPH OF THYSSEN MECHANICAL GRATE.

equal distribution of the air and steam to the apex of each separate cone, the air and steam are distributed by separate branches to each.

A grate such as this on revolution may have a tendency to either upset the fuel bed considerably, or the spaces between the cones may clog up and set hard with ashes. If the former be the case, the wear will be very rapid; and if the latter be the case, the grate does not fulfil its main object. It may perhaps therefore be reasonable to assume that one of the above or other reasons have caused this firm to adopt the propeller-shaped grate shown in fig. 191, which would be more suitable for certain fuels than the design shown in fig. 76.

E. Hilger's first mechanical grate is shown in figs. 77 and 78; it is a "star"-shaped grate, the air being introduced all round the circumference of the

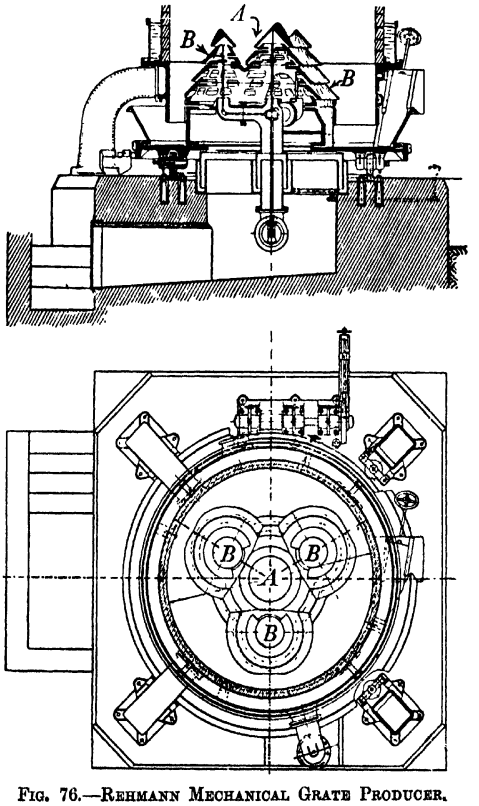

FIG. 76.—REHMANN MECHANICAL GRATE PRODUCER.

"star edges." A novel feature about the Hilger producer is the method employed for the drive of the grate. Usually the producer grates are moved forward in single jerks each time the pawl or friction clip moves on the wheel. With the Hilger producer the grate is moved *forward* with one *long* jerk, and on the return stroke of the eccentric rod the grate is moved *backwards* one *short* jerk, thereby causing, so to speak, a "shaking" of the ashes in the lower part. It is obvious that this method of driving requires more power; but if the claimed effect is efficiently achieved in practice, it probably is worth while expending such extra power.

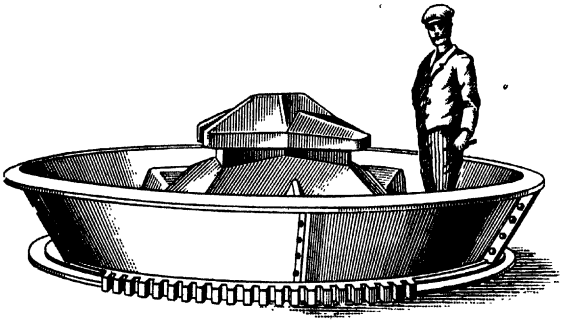

FIG. 77.—HILGER'S MECHANICAL STAR GRATE PRODUCER.

The firm of Poetter, Dusseldorf, give (as per table on the following page) the gasification rates in tons per diem of their Hilger producers, when using various fuels.

It will be noticed that the "star" grate has a very irregular surface, thereby probably giving the ends of the "star arms" a short life, and the remarks made regarding fuel-bed agitation in connection with the Rehmann grate probably also apply to the Hilger design. It is said the Hilger gas producer grates are now made as per fig. 79, which shows no sudden changes in shape causing great wear. This grate is made up of three sections of square hollow plates, on each side of which an air slot is provided, so that on revolution of the grate the air spaces are kept open and prevented from clogging up with ashes.

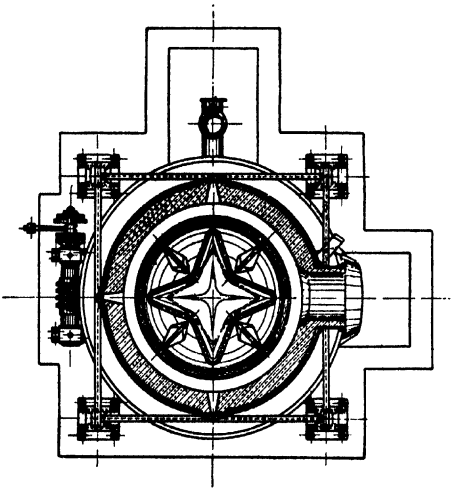

FIG. 78.—HILGER'S MECHANICAL STAR GRATE PRODUCER.

Fig. 80 shows another star-shaped grate, the Goetz type, the idea of this particular design being that the star vanes will have, so to speak, a "milling" action on the clinker, thus effecting a better crushing.

GASIFICATION CAPACITY (HILGER) IN TONS PER 24 HOURS

Fuels.	Internal Diameter of Producers.			
	2000 mm.	2200 mm.	2600 mm.	3000 mm.
Bohemian lignite	16-18	20-22	26-29	33-36
Rhenish lignite briquettes	16-18	20-22	26-29	33-36
Washed nut coal	10-12	12-14	16-19	21-24
Rough slack with 20 per cent of dust	9-11	11-13	15-18	19-22
Pea coal with 50 per cent of dust	7·5-8·5	9-11	12-14	16-18
Waste coke	6-6·5	7-8	9-11	12-14

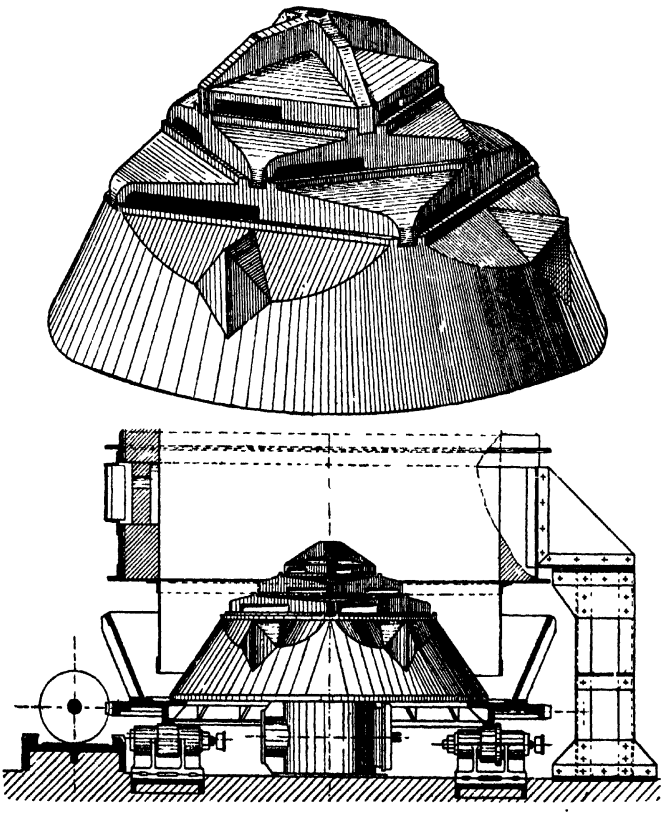

FIG. 79.—HILGER'S MODIFIED MECHANICAL GRATE.

Fig. 81 shows the Barth grate, in which the central top A of the grate is lifted up or down while the ash tray is revolved. This top is square in plan, and contains

four internal rollers B, which are arranged to revolve on an undulated irregular stationary roller track C, whereby the grate top is lifted up or down and also given a swinging side movement. This motion is only effected in the centre, and probably has a better effect than lifting of the whole fuel bed, such as was provided for in the earliest type of the Lymn-Rambush grate. (See British Patent No. 1232, 1912.)

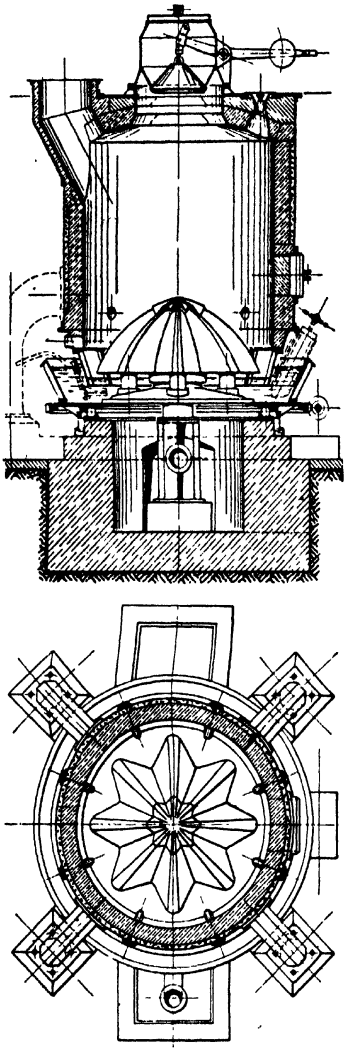

FIG. 80.—GOETZ STAR-SHAPED GRATE.

Fig. 82 shows another type of Goetz mechanical producer in which a stationary flat grate A provided with a number of narrow air slots extends over the whole cross-sectional area of the producer, it being supported on brackets B, which in their turn are carried from the fixed lute plate extension D of the producer shell. The water lute and ash bowl is revolved in the usual way; it carries a central extension, which passes through a hole in the flat grate A, and which is provided at its upper end with a double-armed ash knife, or grate scraper C, which, on revolution of the ash bowl, causes any ashes to be scraped off the flat grate, from which they fall into the water lute. It is claimed that by adopting this design of semi-dry bottom gas producer for dealing with brown coal of over 50 per cent moisture content it has been possible to successfully maintain a good gas at gasification rates of 150 to 160 kg. of theoretically dry fuel substance per sq. m. of producer area and hour (32 lbs. per sq. ft. and hour).

Fig. 83 shows the Huth & Roettger type of gas producer, with blast supply to both centre and periphery (see fig. 59), as well as spiral-shaped fuel-bed agitator. This broken double spiral or snail-shaped agitator A causes the fuel bed to be lifted upwards, gradually and then *suddenly* lowered again, while its vertical surface provides a means for crushing ashes. A similar double spiral agitation of the fuel bed was tried out by Mr. A. H. Lymn and the author several years ago, but discarded again because the agitator, which was part of the grate itself, burnt out too quickly and "upset" the fuel-bed condition

considerably. The spiral in fig. 83 does not contain any air slots, and probably it is for this reason more successful in operation.

Figs. 84 and 85 show two types of fan-shaped grates, made by the Gas Engine Works, Köln-Deutz and Bamag, Berlin, respectively. In both of the grates the air blast outlet is under the cover of the "fan vanes," and, since the direction of revolution of the grate is "away" from the air openings, no clogging up of these can take place.

Fig. 86 shows another design of the Bamag fan-shaped grate, such as is used in their dry-bottom producers for high blast pressures (see fig. 91).

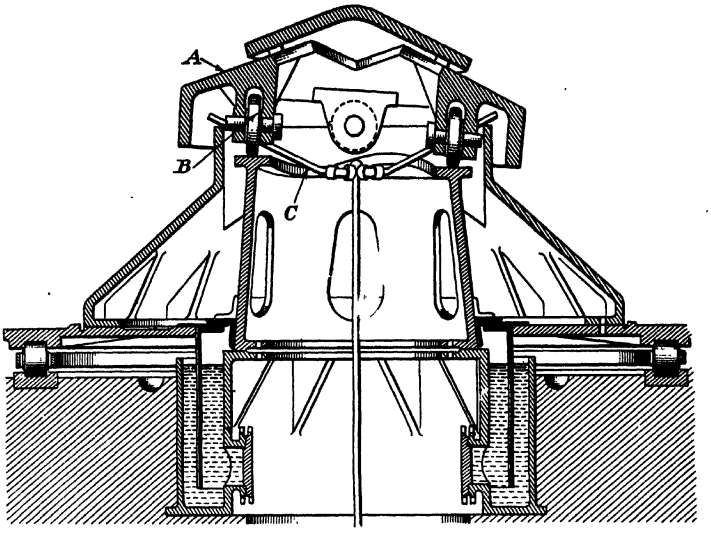

Fig. 81.—Barth's Swinging Grate

Figs. 87 and 88 refer to a mechanical grate gas producer built by Flinn & Dreffein Co., U.S.A., which shows entirely different principles from the mechanical grates described above. The stationary part of the mechanical generator rests upon four heavy cast-iron legs. The brick-ring casting at the bottom carries a lute ring which is suspended in the water seal carried by the movable section. The motion of the movable section is eccentric (not revolving) through a circle two inches in diameter. The movable section consists essentially of—

Ash pan carrying the water seal, having four extensions into which the ash is forced, and from where it may be removed by hand.

Tuyère, which comprises the central air and steam discharge casting, together with four arms and an annular ring at bosh. The top of the tuyère is the shearing level between the mechanical and stationary parts of the generator.

Driving mechanism, which imparts an eccentric motion to the movable sections

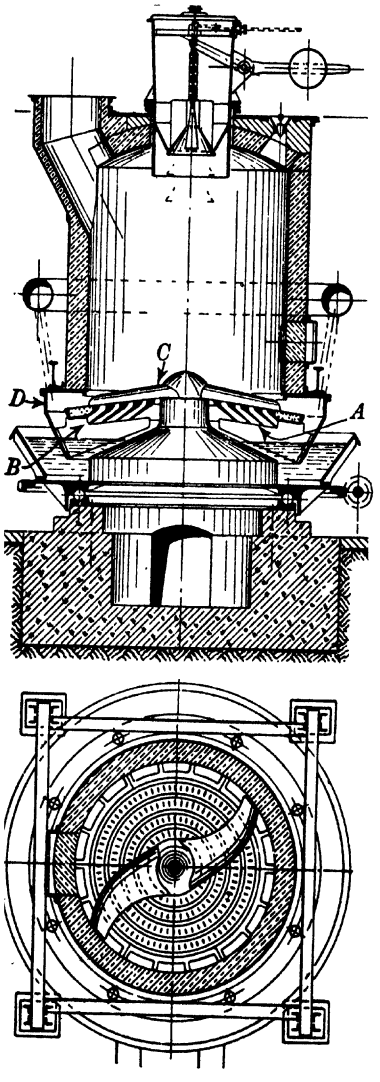

FIG. 82.—GOETZ FLAT GRATE MECHANICAL PRODUCER.

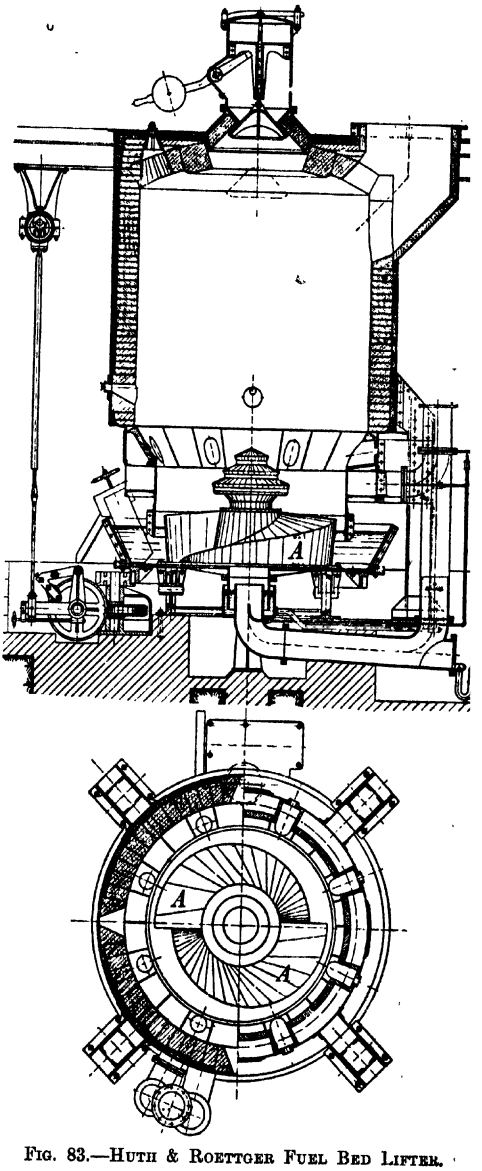

FIG. 83.—HUTH & ROETTGER FUEL BED LIFTER.

by two cranks located at 90° apart. A 1 H.P. motor provides the necessary power for operation, the actual load being less than this.

The ash discharge is effected by means of a cast-iron ring held stationary by

four arms supported by brackets on the side of the generator casing. Hand screws extending against the brick-ring casting are used for adjusting the position of the

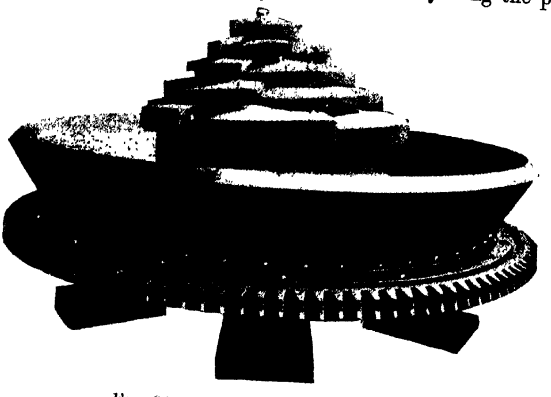

FIG. 84.—DEUTZ FAN-SHAPED GRATE

ash ring to enable more ash to be removed from one part of the generator than another. The ash ring is "saw-toothed" in cross section. The grate is revolved

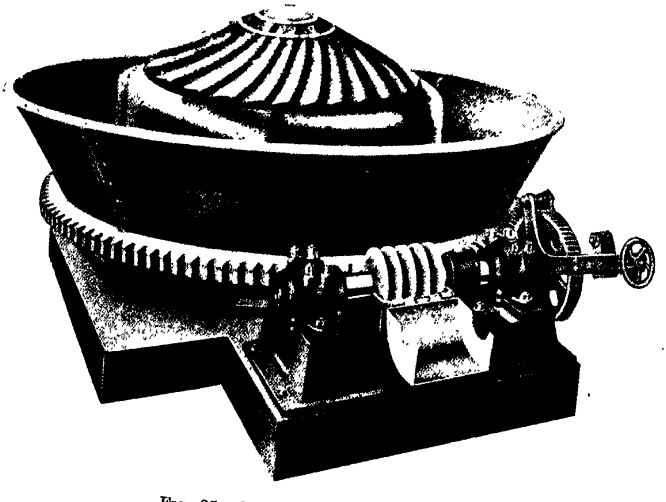

FIG. 85.—BAMAG FAN-SHAPED GRATE.

about one hour out of every six hours, and it is claimed that 20 lbs. of anthracite per sq. ft. and hour continuous gasification rates can be carried without difficulty on an 8′ diam. producer, the carbon content of the ashes being negligible.

Fig. 89 shows the mechanical ashing means employed by Akt. f. Brennstoff Vergasung, Berlin, on their "Chamber" gas producers. The cross-sectional area of this producer is rectangular as in the case of the Heller gas producer (fig. 62), and units of very large gasification capacity are obtained by continued extension of the "chamber" in one direction. The ashes are removed at the base by the movement of single or double reciprocating slides which are operated externally

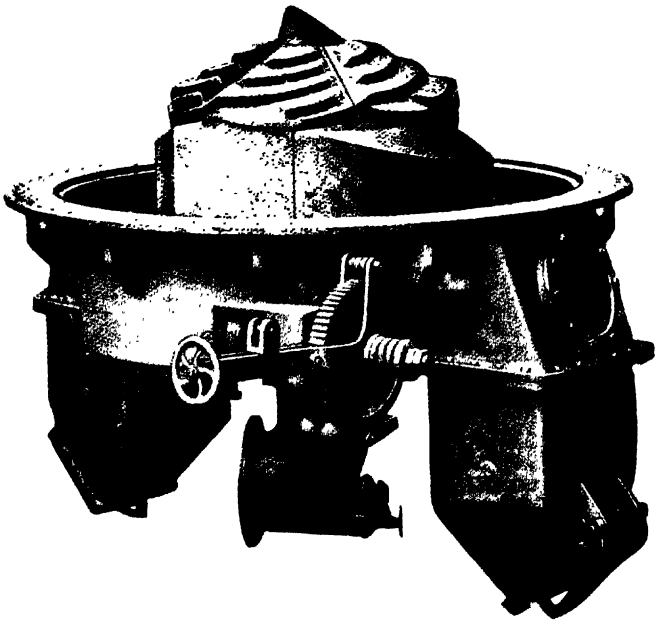

FIG. 86.—BAMAG FAN-SHAPED GRATE FOR DRY-BOTTOM PRODUCER.

by hydraulic or electric power. Ashes pushed off by the slides fall into conical hoppers at the base, from which they may be removed by a scraper conveyor.

It will be seen that the producer has no grate, but that the air enters freely all round the edge of the producer walls; to force the air more towards the centre of the fuel bed the top of the fuel is maintained higher at the edges than at the centre.

Other methods of mechanical ashing and designs of mechanical grates are referred to in connection with figs. 140 and 146, which deal with the high duty gas-producer "machines" of American origin.

HIGH-PRESSURE PRODUCERS WITH MECHANICAL GRATES

When the fuel bed offers a large resistance to the gas flow, be this caused by

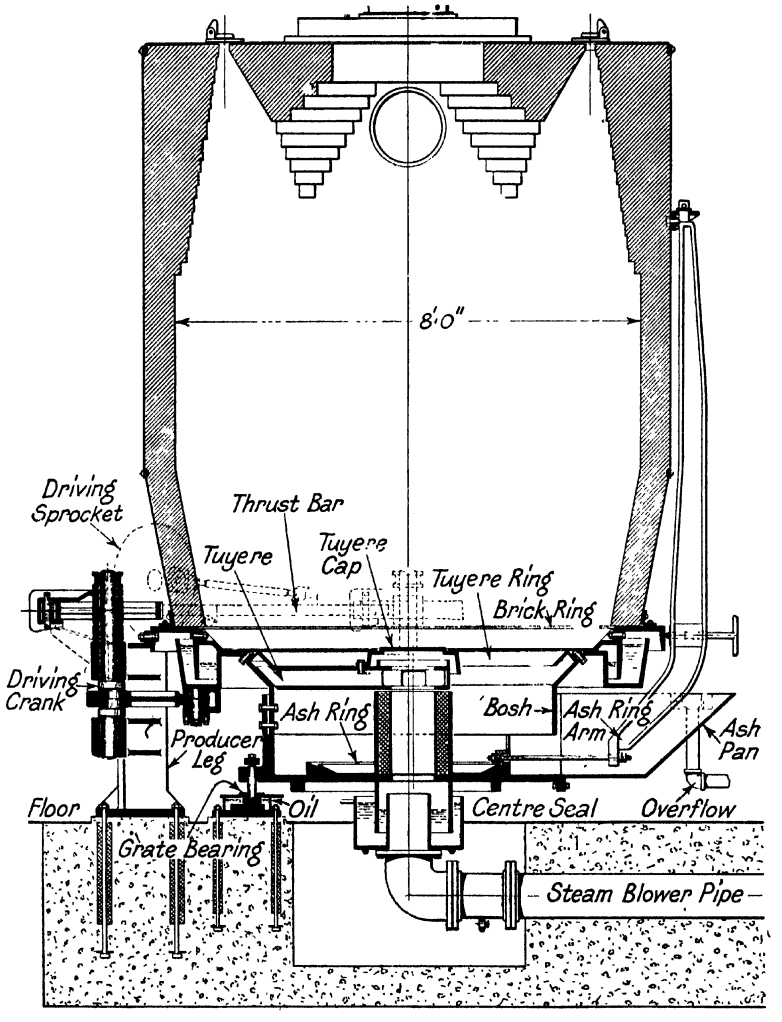

FIG. 87.—FLINN-DREFFEIN MECHANICAL GRATE PRODUCER.

fuel of fine grading being employed, or on account of a deep fuel bed having to be used, it is clear that the depth of seal of the producer body into the revolving lute will have to be increased correspondingly. When using lute depths exceeding 18"

to 20″ it is practically impossible to effect proper discharge of the ashes by the usual kind of shovel shown in previous illustrations of mechanical grates.

To remove the ashes from such deep lutes the Bamag Company employs the contrivance in fig. 90, which shows a small bucket elevator A inserted into the lute, and arranged to discharge the ashes into a truck or ash shute.

To avoid any cumbersome method such as this, this firm also builds mechanical grate dry-bottom producers such as are illustrated in fig. 91. The whole of the base of the producer is enclosed by a base-plate casting A, which contains in suitable recesses the carrying rollers B and side-thrust rollers C, for the revolvable dry ash plate D, upon which in turn sits the grate E. The ash plate is driven from a

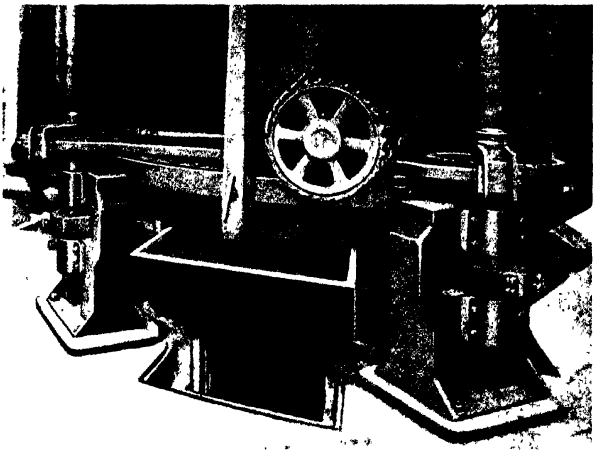

FIG. 88.—FLINN-DREFFEIN MECHANICAL GRATE PRODUCER.

worm and worm wheel attached to its lower side. The ashes are scraped off the plate into two ash receivers F, from which they may be emptied from time to time into underground trucks G. Similar producer types have been in successful work for years in connection with water-gas generators.

SUMMARY

Whether all the various grate designs and systems will justify their existence for the coming decade is difficult to say, but we may perhaps be justified in summarising from the above the requirements that a good mechanical grate has to fulfil, as follows :—

It must maintain the lower part of the fuel bed in a steady, continuous, but *slow* movement.

It must not possess too sudden changes in the shape of its external surfaces, any sudden projections near the fire zone being always subject to heavy wear.

It should distribute the blast evenly over the whole fuel-bed surface.

Its air channels should be maintained free and open when the grate is revolved.

It should crush any large clinkers to smaller pieces before these reach the ash-removing appliance.

Operation of Mechanical Grates

The grates of mechanical producers are revolved at a very slow speed, generally not quicker than one revolution in one hour and generally not slower than one revolution in ten hours; between three and a half and five hours being average practice.

The rate of revolution is determined by the rate of gasification of the producer and the ash content of the fuel, because the more ash there is made per hour the more has to be discharged by the ash shovel. The speed of the ash base is also governed by the shape of the grate and the amount and rapidity of agitation required when gasifying a given fuel.

The rate of ash discharge is not only dependent upon the number of revolutions of the ash bowl, but also upon the depth to which the ash-removing appliances are "dug" in.

Thus it will be seen that so many factors combine to determine the best speed that the "best speed" may have to be changed from time to time as demanded by the operating conditions to be fulfilled. Generally speaking, a slow continuous speed gives better gasification results than quick speeds worked intermittently.

No two producers of a battery will work alike, and therefore it should always be possible to revolve each ash bowl at a different speed from the others in the battery.

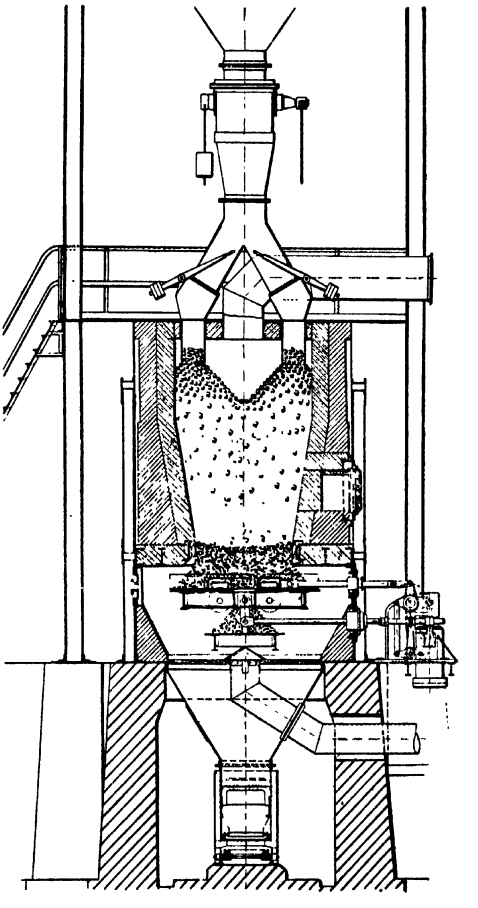

Fig. 89.—Brown Coal Producer with Reciprocating Ash Discharge.

The mechanical means used for revolving the ash bowls are various, the principle of them all being to fulfil the above conditions of obtaining a slow but adjustable speed.

The ash bowl may be supplied with a worm rack or spur rack (fig. 83), or ratchet rack (fig. 87); the rack in all cases has to withstand the forces required during operation. The existence of a force to be resisted of 5 to 10 tons at the circumference of the ash bowl of a 10′ internal diameter mechanical grate producer is no unusual occurrence. The driving mechanism must therefore be one of substantial dimensions, allowing for the taking up of the side thrust from the ash bowl; other forces to be resisted are those characteristic of the method of drive, and cannot be discussed here.

The mechanical efficiency of the means of driving does not play a very great rôle, since in any case the power required per producer is only from $\frac{1}{2}$ to 2 H.P., but it is certain that one cannot find many less mechanically efficient means of operation than the eccentric and worm drive commonly employed. On the other hand, these means are some of the simplest we possess for obtaining in an easy way a quick speed reduction from say that of a motor running at 500 to 800 R.P.M. to a gas producer ash bowl running at $\frac{1}{10,000}$ of this speed.

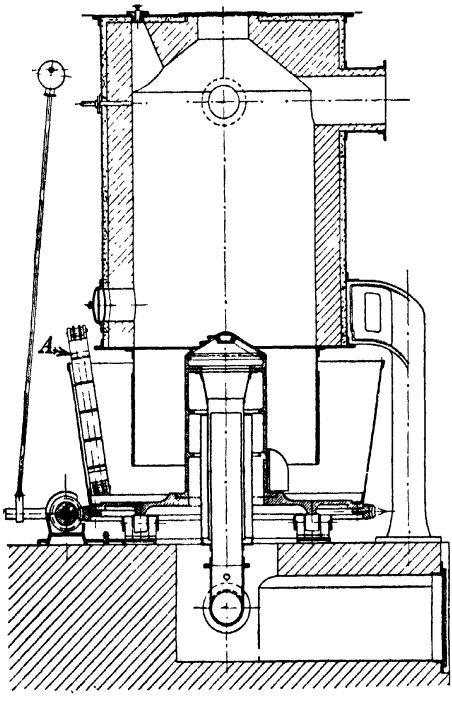

Fig. 90.—Bamag Wet-bottom High-pressure Mechanical Grate Gas Producer.

Fig. 92 is typical of a direct ratchet drive (used on the Barth grate). Through the lever crank a two pawls, b_1 and b_2, are brought into action with the ratchet wheel c, which is keyed on to a shaft carrying an eccentric pin e, which by means of a connecting rod d moves the main ratchet lever f in a slow forward and backward direction. This lever f is oscillated round the pin g and supported at its free end by the roller h; fixed to f are two pawls j, which work into the ratchet k, on the ash bowl. To prevent "back lash" of the ash bowl two non-return pawls l are provided. If proper facilities are provided in the design for the various reciprocating or rotating parts to be easily accessible for lubrication and repairs the mechanical parts should with proper attention last for several years.

Ash Removal

To facilitate the removal of ashes from a battery of mechanical grate producers, it is an advantage to arrange the foundation level so high above ground level (or rail level) that the ash can be discharged by gravity directly into large ash bogies, or, where

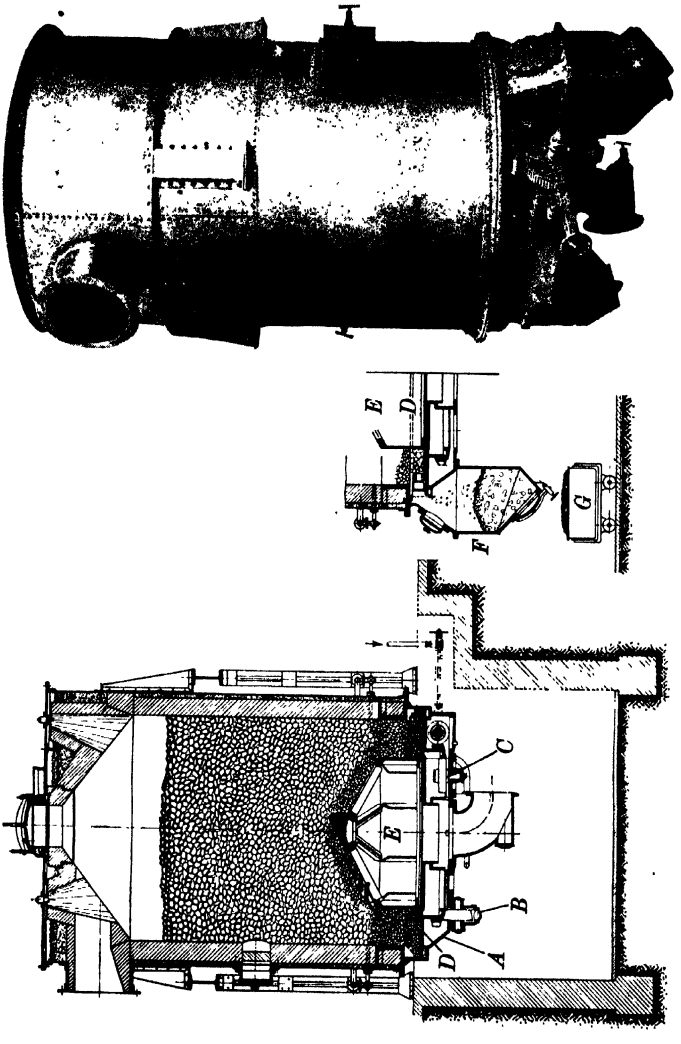

Fig. 91.—Bamag Dry-bottom High-pressure Mechanical Grate Gas Producer.

the ashes are to be removed from the works by rail, in actual railway trucks. Aprons of mild-steel plate are generally used to guide the ashes falling over the ledge of the ash bowl into the ash trucks (see also pages 353 to 366 for other arrangements).

(*D*) PRODUCER CASINGS AND BRICK-LININGS

The gas producer body generally consists of firebrick contained inside a steel casing, the shape of the casing and position of its fittings being arranged in such a way as to fit the lining.

The primary object of the brick-lining is to serve as a heat insulator and a fireproof agent; and although in the early forms of Siemens gas producers (see fig. 44), and even in some of the modern semi-gas fired furnaces (where producer and furnace brickwork are built in one) the brickwork is only held together with a few steel sections and tie bolts, it is now general practice to encase the brick-lining with steel, for obvious reasons concerning the superiority of this material in regard to resisting mechanical stresses and impermeability to gas leakages.

Some gas producers are provided with bricks throughout their whole depth and at the crown; others have the side partly or wholly water-cooled; and again, others have a water-cooled top. Apart from one or two exceptions (fig. 150), every gas producer body is provided with a bricked portion.

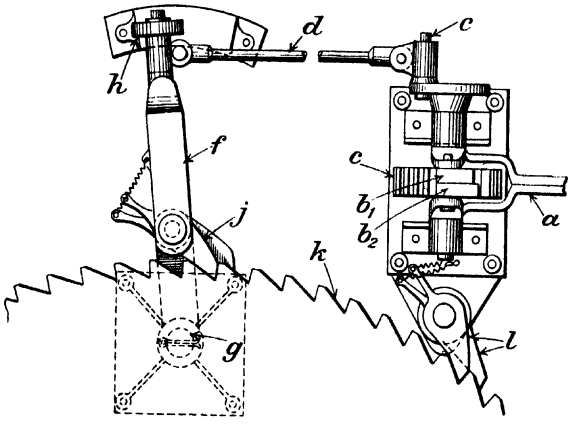

FIG. 92.—DIRECT RATCHET DRIVE FOR ASH BOWL.

Most of the early types of gas producers were rectangular or square in cross section. It was soon found, however, that unless the fuel were so distributed over the top of the fuel bed that the latter became of even depth throughout, there was always a tendency for the fire to burn brighter at those parts where the least fuel depth existed. Since with a producer circular in cross section and centrally placed fuel-feeding device there is more likelihood of obtaining a fuel bed of even depth, practically no modern producers are made of any other cross section than circular. The circular shape has the further advantage that the bricks which form the cylindrical lining key easily with one another, due to their taper shape.

DESIGN OF BRICK-LINING

Fig. 93 shows a few details of various types of brick-lining.

Views *a*, *c*, and *d* show three different systems of lining, viz.—

a, A ring of $9'' \times 4\frac{1}{2}'' \times 3''$ firebricks which are backed by a 2″ lining of insulating bricks between which and the steel casing about $\frac{1}{2}''$ thickness of fireclay is rammed down.

c, A ring of $9'' \times 4\frac{1}{2}'' \times 3''$ firebricks which are backed by a $4\frac{1}{2}''$ thick lining of common red brick with a $\frac{1}{2}''$ thick layer of tightly rammed fireclay.

d, A ring of $9'' \times 4\frac{1}{2}'' \times 3''$ firebricks which are laid about $\frac{1}{2}''$ away from the steel casing, this space being rammed with fireclay.

These three systems, all of which are in vogue, have been arranged in the order of cost—the most expensive first, the cheapest last. It has been customary in many producers to provide a backing of sand, coke, or ashes, of say 2″ thickness, instead of the insulating bricks. This will not be satisfactory in case the lower part of the brick-lining should become damaged, a brick be poked out, etc., the ultimate result being that the gases will pass between the bricks and the casing.

For gas producers provided with circumferential air supply it is most essential that the bricks remain absolutely tight against the casing, thus preventing any short-circuiting of the air between the bricks and the casing to the top of the fuel bed.

Seeing that the radiation losses from the shells of gas producers are generally of a low order (see pp. 57-59), we may take it that the system of lining shown in *d* will be satisfactory for most purposes, except perhaps for producers where the temperatures in the lower part are very high, in which cases either of the systems *a* and *c* will be satisfactory.

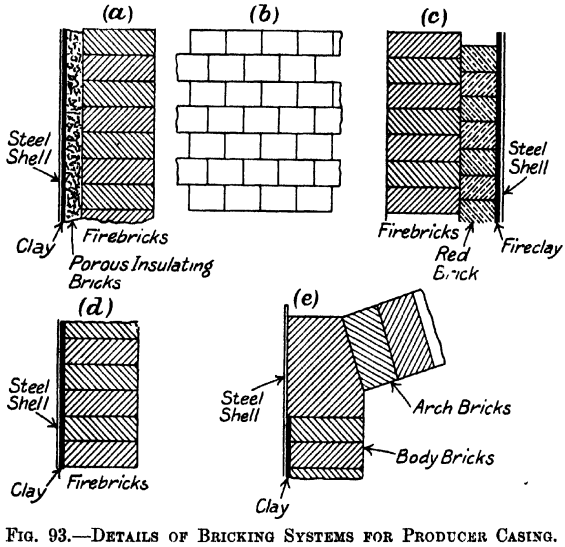

FIG. 93.—DETAILS OF BRICKING SYSTEMS FOR PRODUCER CASING.

The body bricks should always be laid as headers, the various layers being bonded as shown in *b*; the joints between each brick should be made as thin as possible and under *no* circumstances should this exceed $\frac{1}{8}''$.

The fireclay used for setting the bricks should always be made from the same clay as the bricks, and it should not be prepared thick like a mortar, but rather thin and fluid, like a paste or thick whitewash. One ton of fireclay should be quite sufficient for setting 4000 standard $9'' \times 4\frac{1}{2}'' \times 3''$ firebricks.

Since nearly all producers are cylindrical in shape, the body bricks should have radial sides; thus the completed brick ring will become properly keyed together. It is not necessary to make all bricks radial; every other brick may be a standard $9'' \times 4\frac{1}{2}'' \times 3''$ brick, while each of the remaining bricks receives the taper of two.

Although the brick sketches all show a total lining not less than 9″ thick, it should be mentioned that this thickness is not essential on smaller producers, and at the upper parts of producers which are worked cooler at the top. A common thickness on many small anthracite power producers is 6″.

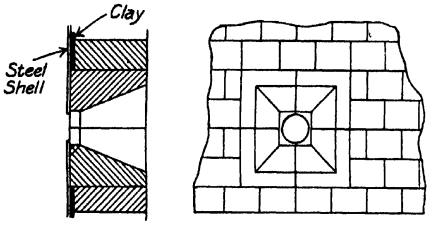

FIG. 94.—DETAILS OF POKING HOLE BLOCKS ON PRODUCER CASING.

At the top of the body bricks, from which the brick crown springs, care should be taken that proper seating bricks (see *e*, fig. 93) are provided for the crown, and that these are set right back against the shell, otherwise a later "sliding out" of the brick crown may have disastrous results. Such a brick as that shown is, of course, a shape that will have to be specially moulded. In designing this or any other special bricks care should be taken to avoid, as far as practicable, any sharp corners, as these may be easily broken off in transit.

Similar remarks apply to the design of other specials, for instance, poking hole blocks (see fig. 94). The poke hole shown here consists of four identical pieces, having sufficient internal slope to allow for efficient poking; these pieces are made of such external shape as to fit in with the ordinary body bricks without excessive cutting of these to suit. It will be noted that no corners of less angle than 90° exist on these specials.

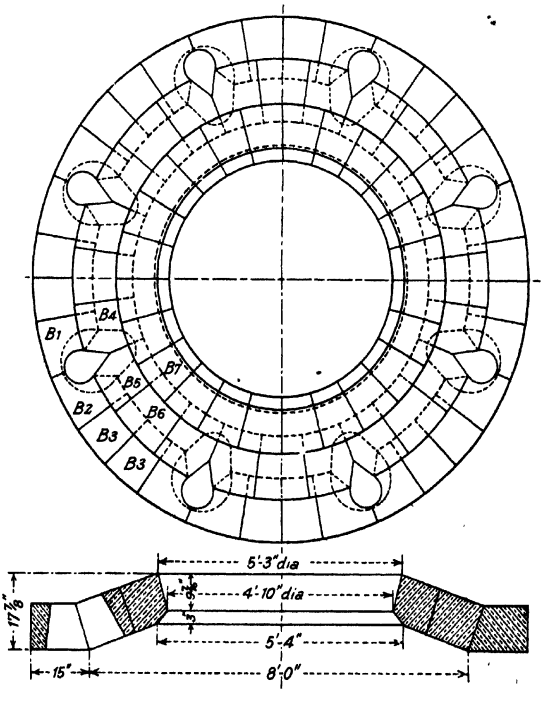

FIG. 95.—DETAILS OF CROWN BRICKS FOR CHAPMAN PRODUCER.

When manholes or explosion doors are to be provided for in the body, the openings will be arched over, and in the case of the manhole lining bricks will be inserted from the outside, so that they may be quickly removed when required.

The gas outlet branch, which is generally taken off directly from the body, may

be lined with 3″ or 4½″ thick circular firebricks which join into the body bricks, the latter being cut to suit. (See fig. 51.)

The brick crown will also have to be supplied with poke hole blocks to permit poking being done from the top in a vertical direction, otherwise, excepting for the circumferential seating blocks shown in fig. 93 (*e*), the crown bricks may be made from ordinary "bullheads," that is, bricks tapered in two directions.

In many cases it is usual to make the crown altogether of special blocks (see fig. 95, which shows a detail of the crown for a Chapman producer); obviously, where a crown has to carry directly the whole of a mechanical stirring device, as well as take up all stresses caused by the fuel agitation, special care has to be taken that, in addition to a sound design, the work is carefully executed.

The pear-shaped openings in the blocks B_1, B_2, B_4, and B_5 are made thus to conform to the curve described by a poker from each hole when it has to reach that part of the top surface of the fuel bed which has to be poked therefrom.

Some brick crowns are covered with steel or cast-iron plates; so long as no high gas pressure exists at the top this is not necessary, if a layer of *hard* burnt bricks set in cement or pitch is laid on top of the crown. (See figs. 50 and 51.) Brick tops such as these should be built slightly higher in the centre (say 1″ higher than at the edges), so as to allow for drainage of rain water.

Quality of Bricks used for lining Gas Producers

Except in the tuyère part of liquid slag producers, where (as mentioned pp. 133-148) special bricks are required, it is very seldom the case that temperatures higher than 1300° C. are required to be resisted, and for this reason it is clear that from a heat-resisting point of view we do not require a very special brick. Even second-class firebricks will be satisfactory in many cases.

A few melting points and refractory coefficients of gas producer bricks used in this country are given in Table 64.

Harvard[1] gives the following melting points for various refractory materials, which will serve as a general guide and for comparative purposes:—

Second-class firebrick (clay) . . .	1400-1650° C.
First-class firebrick (clay) . . .	above 1560° C.
Alumina (Al_2O_3) softens at . . .	1970° C.
Silica bricks soften at	1750-1800° C.
Magnesia bricks soften at . . .	2000° C.

Only the smaller part of the fireclay brick is fresh clay, the remainder being crushed and graded "grog" generally obtained from previously burnt firebricks. The main constituents of the fireclay are, of course, silica and alumina, with which are mixed iron, titanium, calcium, magnesium, potassium, and sodium compounds, all of which can only be looked upon as undesirable constituents in regard to the refractoriness of the finished brick. From pp. 125-126 we have seen how the rough rule of Bischof may be applied for judging the *approximate* refractoriness of

[1] *Refractories and Furnaces.*

TABLE 64

BRITISH FIRECLAYS: ANALYSES, MELTING POINTS, AND REFRACTORY COEFFICIENTS

District	Stourbridge.		Yorkshire.		Lancs.	Durham.	Scotland.	
Analysis of dry clay per cent:								
SiO_2	64·3	56·4	58·52	68·30	57·7	68·24	57·72	61·55
TiO_2	..	1·3	..	0·98	1·89	..	1·47	..
Al_2O_3	30·8	40·4	38·39	26·99	36·9	27·75	36·11	32·63
Fe_2O_3	1·48	1·02	1·54	1·93	1·42	1·35	2·81	3·57
MnO	..	..	..	..	..	..	..	..
MgO	0·89	..	0·11	0·51	0·56	0·72	0·46	0·95
CaO	0·33	0·18	0·42	0·33	0·27	0·16	0·36	0·85
K_2O	2·06	0·58	1·02	0·83	0·61	1·73	1·0	0·43
Na_2O	..	0·60	..	0·20	0·32	0·03	0·3	..
Refractory test:								Load 50 lbs./sq. in.
Cone No.	..	35	..	..	..	..	31	16-17
Temperature ° C.	..	1770	..	..	..	..	1690	1460-1480
Refractory coefficient	1·81	7·8	5·2	1·69	4·1	1·72	2·79	1·7

a mixture of compounds of this class. Regarding firebricks only, it will, however, be of additional interest to refer to the softening temperature curve for various clay cones made from mixtures of pure alumina and silica. This is given in fig. 96. From this it will be clear that the higher the alumina content the more refractory will

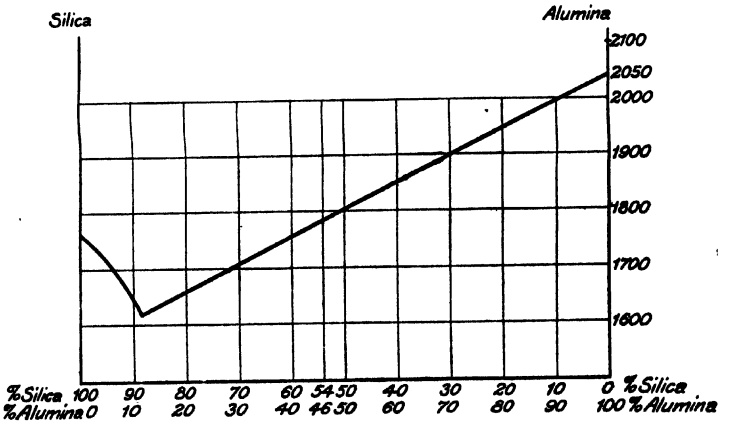

FIG. 96.—MELTING POINT CURVE FOR SILICA AND ALUMINA MIXTURES.

be the clay, and that at about 10 per cent alumina and 90 per cent silica content the eutectic mixture of lowest melting point (about 1600° C.) is reached.

be lined with 3″ or 4½″ thick circular firebricks which join into the body bricks, the latter being cut to suit. (See fig. 51.)

The brick crown will also have to be supplied with poke hole blocks to permit poking being done from the top in a vertical direction, otherwise, excepting for the circumferential seating blocks shown in fig. 93 (*e*), the crown bricks may be made from ordinary "bullheads," that is, bricks tapered in two directions.

In many cases it is usual to make the crown altogether of special blocks (see fig. 95, which shows a detail of the crown for a Chapman producer); obviously, where a crown has to carry directly the whole of a mechanical stirring device, as well as take up all stresses caused by the fuel agitation, special care has to be taken that, in addition to a sound design, the work is carefully executed.

The pear-shaped openings in the blocks B_1, B_2, B_4, and B_5 are made thus to conform to the curve described by a poker from each hole when it has to reach that part of the top surface of the fuel bed which has to be poked therefrom.

Some brick crowns are covered with steel or cast-iron plates; so long as no high gas pressure exists at the top this is not necessary, if a layer of *hard* burnt bricks set in cement or pitch is laid on top of the crown. (See figs. 50 and 51.) Brick tops such as these should be built slightly higher in the centre (say 1″ higher than at the edges), so as to allow for drainage of rain water.

Quality of Bricks used for lining Gas Producers

Except in the tuyère part of liquid slag producers, where (as mentioned pp. 133-148) special bricks are required, it is very seldom the case that temperatures higher than 1300° C. are required to be resisted, and for this reason it is clear that from a heat-resisting point of view we do not require a very special brick. Even second-class firebricks will be satisfactory in many cases.

A few melting points and refractory coefficients of gas producer bricks used in this country are given in Table 64.

Harvard[1] gives the following melting points for various refractory materials, which will serve as a general guide and for comparative purposes:—

Second-class firebrick (clay) . . .	1400-1650° C.
First-class firebrick (clay) . . .	above 1560° C.
Alumina (Al_2O_3) softens at . . .	1970° C.
Silica bricks soften at	1750-1800° C.
Magnesia bricks soften at . . .	2000° C.

Only the smaller part of the fireclay brick is fresh clay, the remainder being crushed and graded "grog" generally obtained from previously burnt firebricks. The main constituents of the fireclay are, of course, silica and alumina, with which are mixed iron, titanium, calcium, magnesium, potassium, and sodium compounds, all of which can only be looked upon as undesirable constituents in regard to the refractoriness of the finished brick. From pp. 125-126 we have seen how the rough rule of Bischof may be applied for judging the *approximate* refractoriness of

[1] *Refractories and Furnaces.*

TABLE 65

HEAT CONDUCTIVITY COEFFICIENTS

	Conductivity.	
	Gr. cals. per sec. per cub. cm. per 1° C.	Kg. cals. per hour per cub. m. per 1° C.
Firebrick burnt at 1050° C.	·0037	1·32
Same burnt at 1300° C.	·0050	1·81
Silica brick burnt at 1050° C.	·0020	·71
,, ,, ,, 1300° C.	·0031	1·12
Firebrick (about 1000° C.)	·0042	1·51
,, (mean 500-1300° C.)	·0040	1·45
,, (mean 0-1300° C.)	·0031	1·1
Chequer brick (about 1000° C.)	·0038	1·38
Magnesium carbonate (85 per cent) (20-190° C.) av.	·00017	·062
Asbestos (36 lbs. per cub. ft.), 600° C.	·00056	·201
,, ,, ,, ,, 50° C.	·00042	·151
Silver, 0-100° C.	1	360

DESIGN OF CASING

The casing of a gas producer is generally made of steel, although for suction or anthracite gas producers of small capacity it is not uncommon to find some makers who prefer to supply the casings in cast iron, the main reason being cheaper first cost, especially when the producer manufacture is laid down on a mass production basis.

A producer casing is a cylindrical vertical shell made from steel plates either riveted or welded together, provided with top and bottom curbs of rolled sections to give the shell sufficient stiffness, and also to facilitate making the connections to the top and bottom end of the shell. If the joints between the plates are riveted, these should be caulked so that the casing becomes gas-tight. In some cases the riveted steel shells are not caulked, but this is not good practice, since, although brick-linings may be gas-tight for a considerable time, the wear and tear in the lower part will sooner or later cause fissures in the bricks through which gas may escape.

The minimum steel plate thickness of which a riveted joint can be caulked is $\frac{3}{16}''$, but from the point of view of life of the plant it is inadvisable in good practice to use steel plates for the riveted casings of less than $\frac{1}{4}''$ thick; indeed, for intensively worked gas producers the steel plates in the lower parts should not be made less than $\frac{5}{16}''$ thick.

Fig. 97 shows in detail typical designs of steel casings, A and B being for a static producer, while C is for a mechanical grate producer.

Dealing with type A: here the producer is to be covered with a $\frac{3}{8}''$ thick top plate and the top angle curb is made $4'' \times 2\frac{1}{2}'' \times \frac{3}{8}''$, thus enabling a bolted asbestos packed joint to be made for the top plate and leaving extra space on the top angle, which may be used for the support of the platform plates. The steel shell is made of $\frac{1}{4}''$ top tier and $\frac{5}{16}''$ bottom tier, the latter carrying at its lower end a $3'' \times 3'' \times \frac{3}{8}''$ angle curb, which is bolted to the ribbed 1″ thick angle-shaped casting, made in

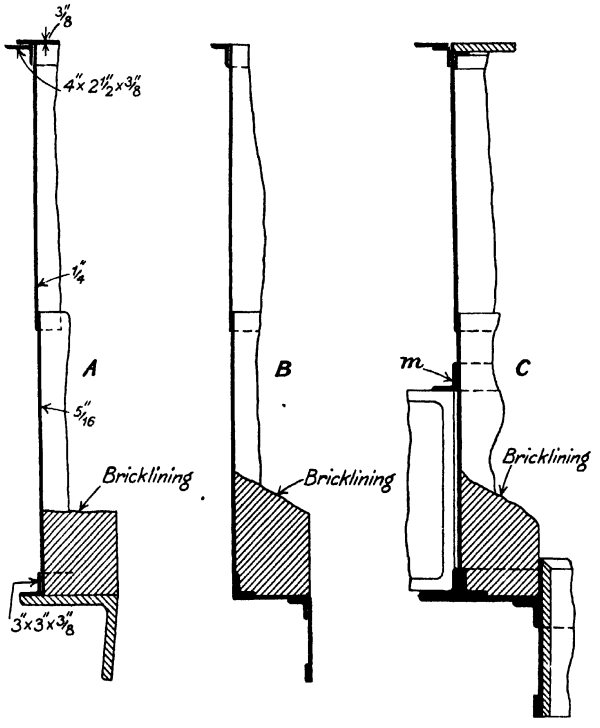

FIG. 97.—DETAILS OF TYPICAL STEEL CASINGS FOR BRICK-LINED PRODUCERS.

sections, which forms a seating for the producer, and also "seals off," in the water lute, the internal contents from the outside.

Dealing with type B: here there is no top plate, the producer crown being provided with a brick paving. A small angle curb at the top serves as a support for the platform plates. The shell is made from two tiers of $\frac{1}{4}''$ thick plates carrying an internal bottom curb, which is riveted to an annular steel base plate (say $\frac{3}{8}''$ thick), to which is again riveted a mild steel lute plate (say $\frac{3}{8}''$ thick), which is provided with a stiffening bead of flat iron. Type B is a cheaper construction than type A, but it is quite satisfactory for many purposes. It is likely, however, that

after six or eight years' continuous use, the lute plates will corrode through and require replacement, which will not be the case in regard to the cast-iron lute plate, type A.

Dealing with type C: here the top cover has been assumed to consist of a series of cast-iron plates, for the supporting of which the upper end of the steel shell carries a small internal angle curb, while an outside curb is provided to carry the platform plates. The shell has two tiers, the top one being $\frac{1}{4}''$ thick, and the bottom $\frac{3}{8}''$ thick. The bottom tier is further reinforced by heavy angle curbs; the reason for this heavier design is that the lower part of the steel casing being supported from, say, four bent columns is a kind of circular girder from which the whole producer weight is carried. To ensure the elimination of buckling of the steel plates at the angle *m*, it is advisable to see that the bricks are brought right up against the casing or that the clay behind is rammed very hard. The lute plate is provided with a cast-iron liner to take up the wear caused by the crushing of the clinker by the mechanical grate.

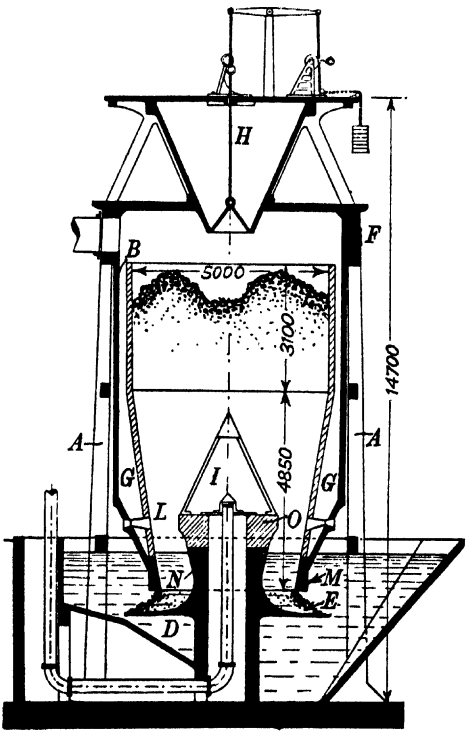

FIG. 98.—VERITY REINFORCED CONCRETE GAS PRODUCER.

The above described casings will all be fitted with seatings for manholes, explosion doors, poking holes, etc., in such numbers and in such places as the particular design of producer dictates.

Most of the larger producer casings are riveted up on site, and from the point of view of appearance and of having the least possible obstruction for the bricklayer, all riveting should be done from the inside, flat heads being made. There is no need to countersink the rivet holes on the inside.

The matter of the design of water-jacketed tops or casings is dealt with elsewhere (pp. 245-264); suffice it to say here that the plate thicknesses in casings near the ash and oxidation zone should not be less than $\frac{5}{8}''$, and the plates should have hammer-welded joints. For plates facing the top layers of the fuel bed the employment of thinner sections is quite justifiable.

Before leaving the subject of casing materials and design, reference should be

made to figs. 98 and 99 showing producers for which the casings are made in reinforced concrete.

Fig. 98 shows Verity's gas producer,[1] which has been built in Italy and which is designed to gasify about 4 tons of theoretically dry lignite per hour; it has an internal diameter of 5 m. (16 ft. 6 in.), corresponding to a gasification rate of 203 kg./sq. m. and hour or 41 lbs./sq. ft. and hour.

During the War some reinforced concrete gas producers were built in cases where the supply of steel for the producer casings could not be arranged for. A design of mechanical grate producer (by the Power Gas Corporation) is shown in fig. 99.

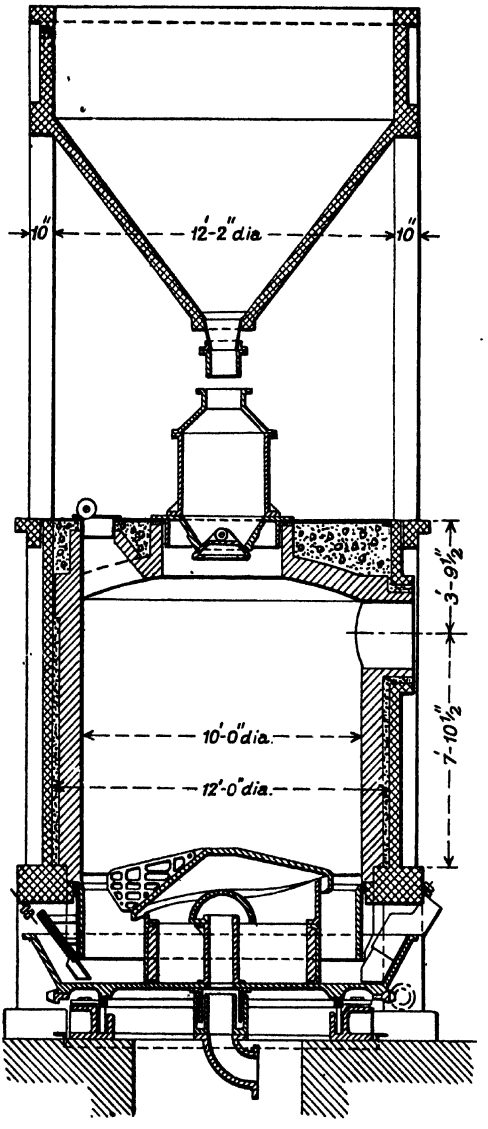

FIG. 99.—POWER GAS REINFORCED CONCRETE GAS PRODUCER.

Dealing with fig. 98, practically all parts except those that come into contact with the lower part of the fire are made from reinforced concrete; even such parts as the fuel-charging hopper and top plate are made from this material, the latter being considered a practicable proposition for producers gasifying such a moist fuel as the Valdano lignite. By means of columns A and circular girder F at the top is suspended the producer casing B, the lower end of which is drawn together to a circular beam M, upon which rests the firebrick lining L; between the latter and the casing B is left an annular space G, which is filled with porous insulating bricks which should be wide enough to enable the temperature stresses between the inside and the outside layers of the reinforced concrete casing B to be maintained within such limits as can be resisted by the

[1] *The Engineer*, March 31, 1922.

einforcement bars in the concrete. Longitudinal expansion stresses are obviously provided for by the special method of suspension, the temperature stresses nentioned being between cylindrical layers of uneven temperature.

Dealing with fig. 99, this shows a design of a reinforced concrete encased gas producer provided with mechanical grate and feeding hopper in cast iron, while the uel storage bunker is made from reinforced concrete. When steel is obtainable a nechanical producer of the size shown is much cheaper to execute in steel and cast ron only than in part reinforced concrete. It is shown, however, to indicate what n the past has been a commercial possibility.

In view of the iron and steel prices that are likely to obtain in this country in he near future, reinforced concrete producers are unlikely to prove an economical roposition.

(*E*) HAND-FED AND HAND-POKED PRODUCERS

The chief requirements of a fuel-feeding device, whether static or mechanical, re :—

(1) The fuel should be distributed as evenly as possible.
(2) Fuel charging should be effected without any gas loss to the outside.

The evenness of distribution of the fuel over the whole of the fuel bed is, of ourse, best achieved with a feeding device placed centrally at the top of a gas roducer, circular in shape. Since the rate of gasification may be different in one art of the producer than in another, due to unevenness in fuel bed resistance, it s necessary both with static and mechanical feeds to counterbalance such uneven urning by raking fuel across the fuel bed with the poker, or reducing the rate of asification. The purpose of all mechanically stirred or poked producers is to overome the uneven burning by filling the fresh fuel into any voids or openings that nay occur in the fuel bed.

Whether or no such uneven gasification occurs, that static fuel-feeding device hich does not feed evenly or (with unevenly graded material) feeds larger pieces of uel more to one part of the fuel bed than to another, is always likely to cause either lower gasification rate or produce gas of a lower quality than could be produced ith an efficient fuel feed.

The capacity of the static fuel-charging device is also a point which requires ttention in so far as with larger gas producers more fuel has to be supplied per nit of time, and if the quantity charged at one time be small, the more often will he operator have to work the feeding device. Except in cases where caking oals are to be gasified, it is customary practice to make the fuel-charging capacity orrespond to that amount of fuel which is gasified in twenty to thirty minutes. If rge quantities of coking coal are charged in bulk instead of in small quantities at time, there is more likelihood of uneven burning.

It will be plain that with a volatile fuel the gas quality will alter during the

charging intervals, thus immediately after charging it will generally contain a much larger quantity of the distillation gases from the fuel than previous to the time of charging; a variation in practice of 5 to 10 per cent either way from the average gas heating value is not unusual in hand-poked and hand-charged gas producers of shallow fuel depth. Obviously this remark applies to installations of single unit producers, since gas quality fluctuations of this kind are considerably lessened when the gas is supplied from a battery of producers.

In some cases the fuel is not charged directly on top of the fuel bed, but into a centrally placed fuel *bell* or container from which it is allowed to flow or roll by gravity along its angle of repose to whatever point of the fuel bed be the lowest. In this way a constant fuel bed depth and shape is maintained. This system, however, can only be used with fuels which do not become sticky before entering the fuel bed, since stickiness will prevent the free rolling of the fuel particles. Such a method is further limited to fuels of even grading, since unevenly graded fuels will be "trimmed" in rolling down an incline, thus causing the largest fuel pieces to roll farthest away from the fuel bell while the smaller fuel pieces remain in the centre, thus causing the fuel bed resistance to become uneven across the diameter. Since in most cases the fuel bed resistance is less near the brick-lining than at the centre, it will be realized that any trimming of the fuel particles from a centrally placed bell will not have the effect of equalizing the resistance, but rather increase the unevenness of the same. While the gas quality is more likely to be constant and independent of the charging intervals, when the producer is provided with a fuel bell, it is not certain that the gasification rate can be made as high as when no fuel-feeding bell is supplied.

In the earlier types of gas producers the fuel was shovelled in through an open door in a similar way to what is now customary on a boiler fire. Such types of fuel-charging devices are even used to-day, but only in cases where furnace and producer are built together in one common brick setting, as is customary with many semi-gasified furnaces. See, for instance, fig. 38.

Such fuel-charging devices are not gas-tight, since, when charging, air will be sucked in (if worked with chimney draught) or gas escape to the outside (if worked under pressure).

Fig. 44 shows the way in which Siemens first overcame this difficulty by making a fuel container (*hopper*), which in addition to the top cover was closed with a flap at the base, thereby allowing coal to be filled into the hopper without escape of gas. After shovelling the coal into the hopper the flat top cover was secured in a gas-tight manner, and the flap opened by means of the counterbalanced lever. The provision of a flap at the base of a hopper is, however, not a satisfactory means for causing an even fuel distribution, for which reason most modern static feeds are closed at the base with a conical valve such as is also customary in blast furnace-charging hoppers.

Fig. 100 shows a sectional elevation drawing of a coal-charging hopper of about ½ ton capacity. It consists of the hopper body A of slightly taper shape, having a 2′ 6″ internal diameter opening at the base, where it is closed by means of a cast-

iron conical valve B; at the top the hopper is provided with a conical cover C, with a 16″ diameter opening closed with the fuel inlet slide D. The base of the hopper and the external face of the valve are machined so as to enable a gas-tight joint to be obtained. The apex of B is riveted to a wrought-iron tail rod E, which through a system of links is connected up to the lever F, which in its turn is connected to the lever H carrying counterbalance weight J. F and H are both fixed to the fulcrum shaft G, which rests in bearings in the hopper body A, the lever F being inside the hopper and the lever H outside, available for operation by the producer-man.

The weight J should not only balance the weight of the valve B, but also that part of the weight of coal that it supports; since this involves a heavy weight (for ½ ton fuel charge), the balance weight J is carried on two rollers K, so that instead of having to lift up the heavy weight the man pushes the weight so far towards the hopper body that the leverage of the balance weight becomes too small for the fuel charge, thus causing the internal valve to open of its own accord. Similarly, but in the reverse way, the hopper valve is closed again without causing the man to exert too great an effort.

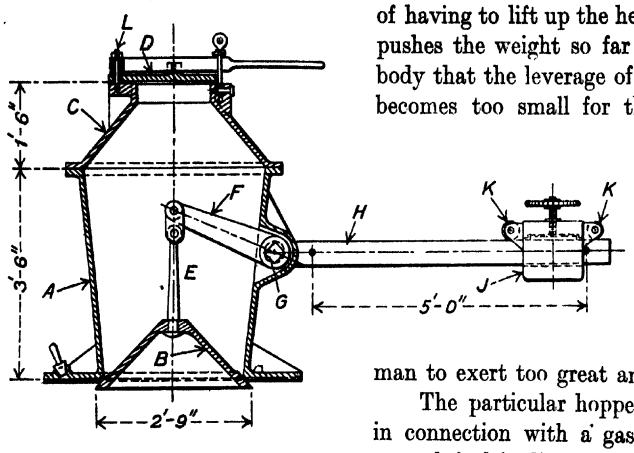

Fig. 100.—Static Fuel-charging Hopper.

The particular hopper shown is one used in connection with a gas producer having a central fuel-feeding bell, hence it is possible to make the valve B of ordinary cast iron. In such cases where the under side of the valve is exposed to the radiation from the top of a hot fuel bed, it is advisable to make the valve of hematite cast iron, or better cast steel. Further, to allow for easy renewal, it is advisable to substitute the tail rod E, the riveted head of which is exposed to the heat of the fire, by a vertical link fixed at the lower end to the valve by means of a pin (see fig. 102).

Detailed views of the top slide for the fuel hopper are shown in fig. 101. The slide is revolved round the pin L, the particular advantage claimed for the design shown being that the slide carries an extension piece provided with a 16″ diameter opening M of conical shape, which guides the coal charged from an overhead storage hopper and also reduces the loss caused by the blowing about of coal dust during charging.

This particular hopper is unsuitable for producers in which the fuel has to be shovelled into the hopper by hand, because it is too tall and the top-charging opening too small for shovel feeding.

A more suitable hopper for this purpose is shown in fig. 102, which consists of a cylindrical body B, 2′ to 2′ 9″ high (depending upon capacity), closed at the top by means of a steel top plate A, which leaves an opening of 2′ 6″ to 3′ 6″ diameter clear for shovelling in the coal; the principle of operation is otherwise as described in reference to fig. 100. Attention should, however, be drawn to the removable seat C for the hopper valve, which enables quick exchange or repair of any parts damaged by the fire. D is a casting the object of which is to cause the fuel to fall into the producer in annular shape, the diameter of this ring, and of the valve F, being altered to correspond to the diameter of the producer. For producers of large diameter it is often difficult to cause the fuel to be charged more to the edges than the centre, especially with fuels of a small grading, in which cases a valve of larger diameter, say such as is indicated at E, may be usefully employed. With fuels of uneven grading it will, of course, be plain that the larger particles (which bounce more) will be spread farther away from the centre than the smaller particles, in which cases a valve of a large diameter is also an advantage.

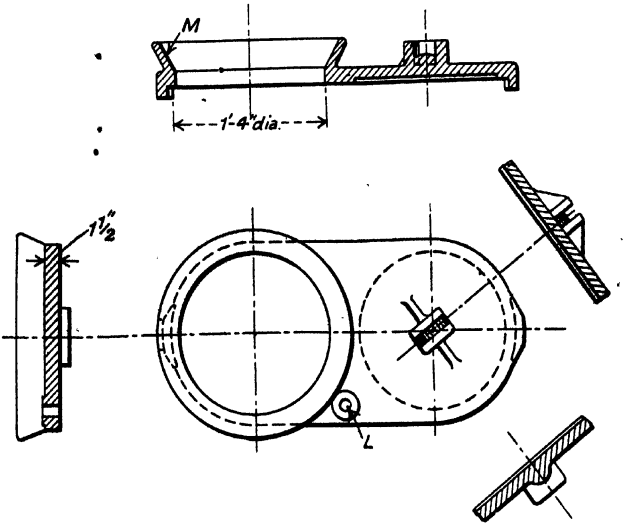

Fig. 101.—Detail of Top Slide for Static Fuel-charging Hopper.

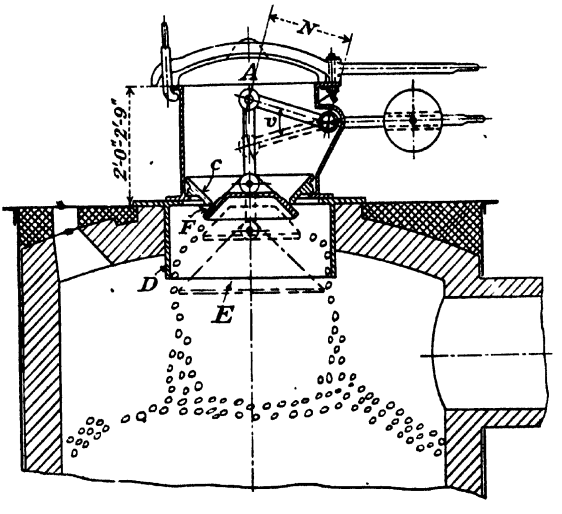

Fig. 102.—Fuel Hopper for Hot Gas Producer and Shovel Feeding.

Another method of deflecting the falling fuel, either towards the centre or the edges, is shown in fig. 103, which represents the design used on the Hilger gas producers.

It will be clear that the centre of the valve on opening will not travel exactly

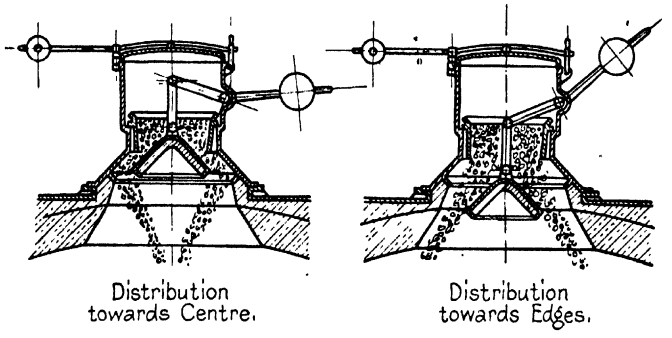

FIG. 103.—FUEL HOPPER FOR HILGER PRODUCER.

along the axis of the producer, depending upon the angle of movement v and the length of the lever arm N (fig. 102). In general practice, and where the charging levers are carefully made and dimensioned, this will not be found to have any serious

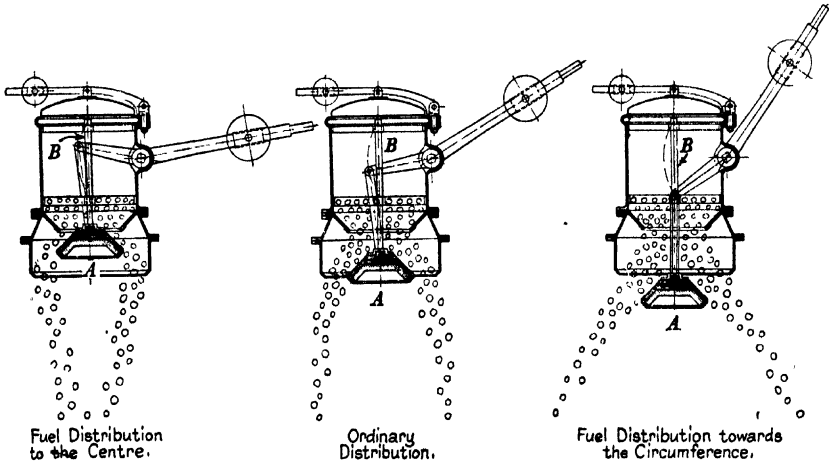

FIG. 104.—FUEL HOPPER FOR BAMAG PRODUCER.

consequence upon the gasification results. Figs. 104 and 105 are examples, showing how the movement of the hopper valve may be made to follow strictly the producer axis.

Fig. 104 shows a hopper such as is supplied by the Bamag Company, Germany,

The fuel valve A contains at the top a guiding spindle which moves inside a vertical tube B, thereby preventing the movement of the valve links from having any effect upon the position of the valve. By adjusting the amount that the coal valve is opened, the operator has it in his power to cause the fuel to be deflected towards the centre or edges, as may be required. It will be seen that the under side of the valve is arranged for lining with firebrick to prevent too rapid burning out.

The "Vulcan" charging hopper shown in fig. 105 also provides means for guiding the valve in a vertical straight line path. Its particular points of interest are, however, that the fuel is shovelled in through a side door A, and that the valve is moved by chain and chain-wheel segments and not by levers.

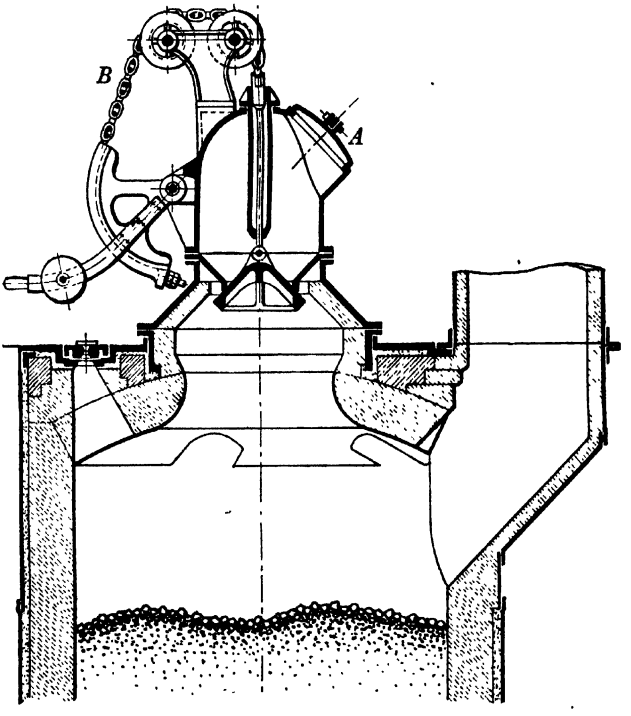

FIG. 105.—FUEL HOPPER FOR VULCAN PRODUCER.

Fig. 106 shows a type of hopper which has been used on some of the Kerpely producers. By having two levers, A and B, which can be jointly or independently operated, it is possible to independently control the position of the two valves C and D. Three relative positions of opening are indicated in the figure; in the first position the fuel is mainly charged to the edges; in the second position mainly towards the centre; and in the third position both to the centre and to the edges.

On some American gas producers it is customary to subdivide the fuel charged from the hopper into spouts feeding to various parts of the fuel bed. Fig. 107 shows as an example the four point distributor as used on the Sharp-Basset producer (see also fig. 160), a fuel feed hopper of ordinary design being secured by means of the studs at the top of the casting.

A different type of charging device is shown in fig. 108, a design which is very commonly used on suction producers or on anthracite or coke producers of small

capacity. It consists of a hollow cast-iron tapered container or cock A, which is fitted in a gas-tight manner into a corresponding seat provided in the main hopper body D, which is provided with openings E_1 at the top (for filling in fuel) and E_2 at bottom (for discharging fuel). The valve is provided with an opening B, which is of such a size that it is impossible for E_1 or E_2 to be in connection with one another, a point which is of great importance on producers in which the top of the fuel bed is worked

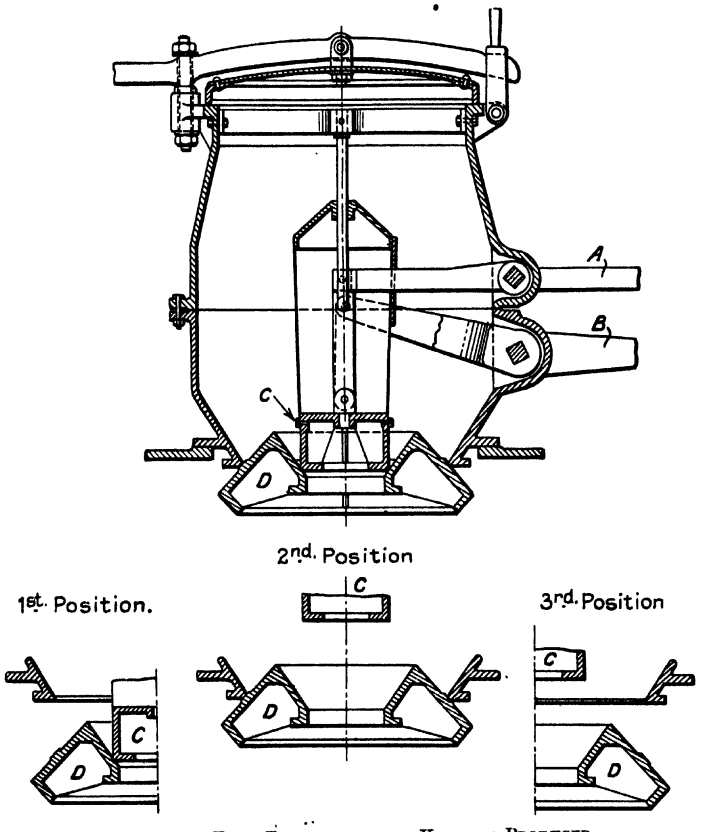

FIG. 106.—FUEL DISTRIBUTOR FOR KERPELY PRODUCER.

under suction, since it prevents the occurrence of explosions (due to the sucking in of air) which might take place, and indeed have taken place, with double-door hoppers such as have been previously described. The cock A can be revolved by means of the handle C, while any wear is taken up by tightening the spring F.

Fig. 109 indicates a similar type of rotary stoking valve used by Crossley Bros., which also shows how it is possible by fixing the valve A on a fuel container B, and feeding belt C, to provide such an ample storage of fresh fuel in the top of the producer that hand-charging need only take place at several hours' interval, and yet

the fuel-bed depth is maintained constant. Obviously the system shown mainly applies to small gas producers. D is a poke hole, closed with a plug (of which a number are provided all round), while E shows a poker inserted through one of these.

Fig. 110 represents another system of continuous fuel feeding during intervals between charging, as adopted in the Pierson (of Paris) suction producer. Fuel is supplied to the hopper B about once a day, and by making the bell mouth E of proportionally very much smaller diameter than in the case of fig. 109, a larger free area is obtained for the producer gas leaving the top of the fuel.

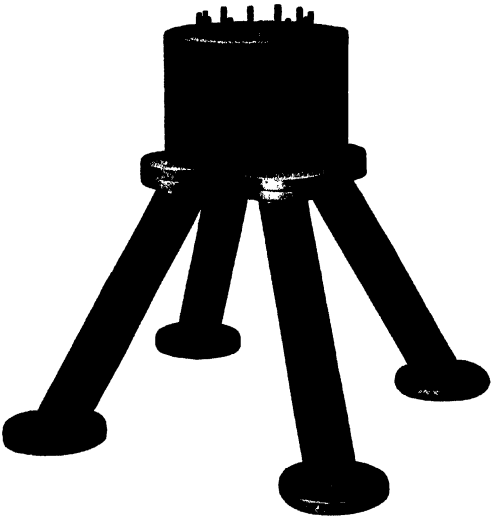

Fig. 107.—Fuel Distributor for Sharp-Basset Producer.

The supply of a fuel from a continuous feeding central bell mouth has the disadvantage that with fuel of uneven grading there is a tendency to trim the larger pieces to the edges.

Many suggestions have been made to overcome this. Fig. 111 shows the Kynoch suction producer, in which the gas is removed from the centre of the producer at a considerable distance below the top of the freshly introduced fuel.

Fig. 112 shows a German design in which the gas is also removed in the centre and below the top level of the fuel; the fuel is not supplied centrally as in the Kynoch producer, but from a hopper at the side, for which reason the gas offtake pipe is arranged to be revolved and provided with means whereby the fuel bed is stirred up at the same time.

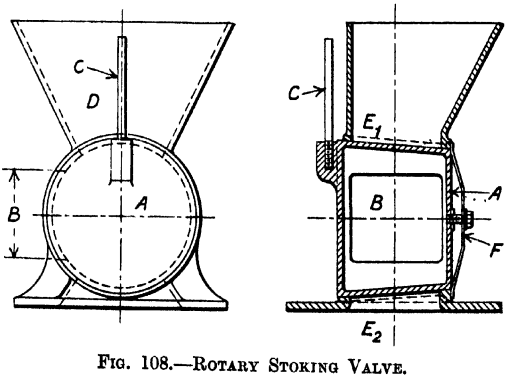

Fig. 108.—Rotary Stoking Valve.

The disadvantages attaching to the use of central gas outlet pipes are that the dust loss is generally high (due to the higher gas velocity at the top surface of the fuel); the fuel bed is not visible to the operator; in some cases channelling of the fire towards the centre is caused, and the inner pipe connections are liable to burn out.

Another system for economizing in the labour used for charging the producer, and yet maintaining a constant fuel depth, is shown in fig. 47. Such a system is not exclusively used in the Stein producer described, but has been employed on other gas producers having a rectangular cross section and an inclined grate.

Most of the previously described fuel-feeding devices have been used for coal, anthracite, coke, or other hard fuels of comparatively high specific gravity. When fuels such as peat blocks (especially light ones), timber, wood twigs and branches,

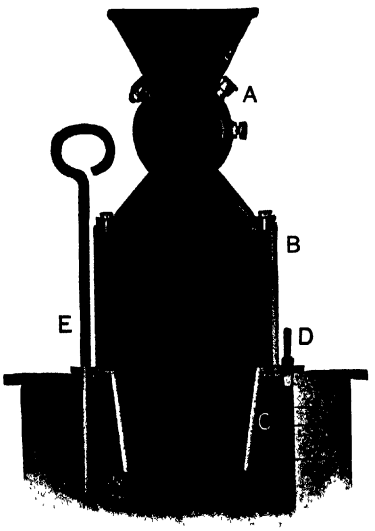

FIG. 109.—ROTARY STOKING VALVE AND FUEL-FEEDING BELL

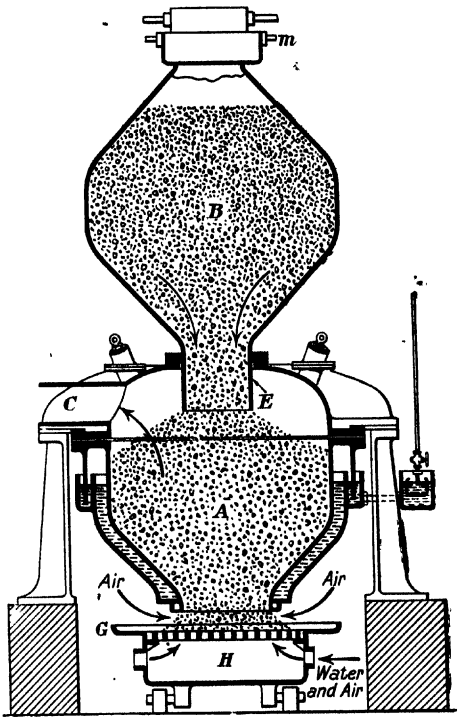

FIG. 110.—PIERSON SUCTION GAS PRODUCER.

or other refuse of vegetable origin, have to be gasified, the design of the charging device must be such as to take into account the physical properties of the fuel, especially its specific gravity and its tendency to "hang up."

So far as the determination of the storage capacity of the charging hopper is concerned, Table 66 states the weight in lbs. per cub. ft. or kg. per cub. m. of various fuels when stored in bulk form. From this it will be particularly clear that the fuel storage capacity of a wood- or vegetable-refuse producer will be only one-fifth of that of a coal producer of the same diameter and fuel depth; further, due to the fact that the heating value of the vegetable fuel supplied is only one-half to one-third that of bituminous coal, the *heat* storage capacity is only one-tenth to one-fifteenth. These

TABLE 66

WEIGHTS OF VARIOUS FUELS IN BULK

	Lbs. per cub. ft.	Kg. per cub. m.
Anthracite	52-56	830-900
Bituminous coal:		
Average nuts	48	770
,, slack	53	850
Ruhr coal	58	930
Saar coal	45	720
Coke:		
(From coke-ovens)—Hard	24-33	380-530
(From gasworks)—Soft	23-29	360-470
Breeze	35	560
Brown coal:		
Air dry (lumps)	40-49	650-780
Bohemian brown coal	47	750
Peat:		
Peat dust in sacks	22-27	350-440
Briquettes	39	620
Hand-cut peat (sods)	11-25	180-400
Wood:		
Oak logs	26	420
Beech logs	25	400
Pitch-pine logs	20	320
Charcoal:		
Soft woods	10	160
Hard ,,	15	240
Sawdust	11	177
Straw:		
Loose	5	80
In bales	20	320
Cork:		
Refuse (dust)	22	350

The volume occupied by a stored fuel depends not only on the specific gravity proper of the single fuel particle, but also upon the grading, and whether the fuel is piled loosely or shaken.

points should be carefully borne in mind when designing both fuel-charging devices and generator bodies for light fuels; not only should the hoppers be large, but they should also allow for quick charging.

Fig. 113 shows a charging device which, according to O. Nagel, is used on wood gas producers in Russia. The hopper A and top cover B show no specific features, but the base valve has been made of two flaps C (hinged at the hopper edges) which enable the full opening of the hopper to be available for the passage of the wood pieces. Since wood blocks also hang up in such overhead feed hoppers as are commonly supplied for coal, no overhead storage bunker is used, but a charging carriage run on a telpher track supplies fuel to the various producers; the base of the charging carriage is arranged for opening in a similar way to that of the flaps at the base of the feed hopper.

Similar devices to this may be successfully employed when charging

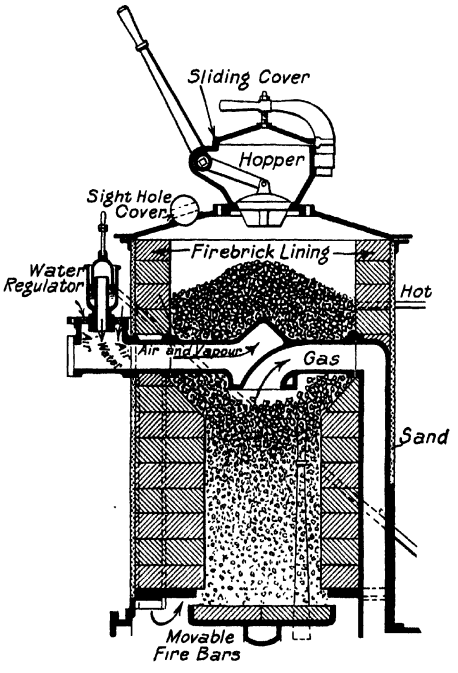

FIG. 111.—KYNOCH SUCTION GAS PRODUCER.

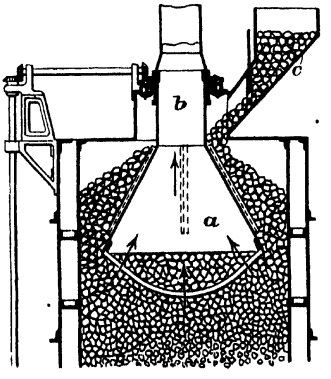

FIG. 112.—PRODUCER WITH CENTRAL GAS OUTLET PIPE.

producers dealing with peat sods, although the latter material is often broken up in a crusher to nut size, thus enabling feeding apparatus similar to those used for bituminous coal to be employed.

Fig. 114 shows the Cambridge log wood producer. By opening the door B wood logs up to 6′ length are pushed through the square opening A, the width of which is equivalent to the producer diameter and the base of which is inclined, thus permitting the logs to be easily pushed into the producer and fall into the proper fuel bed C. Due to the fact that the producer is of the down-draught type, air being admitted at D and E, no great disturbance in operation takes place when

the charging door B is opened. Poking holes F and door G enable "arching" or "hanging up" of the logs in passing through the producer to be prevented.

Fig. 115 shows a sectional elevation of the Wells gas producer, which is designed especially to use up or destroy vegetable refuse such as shrubs, branches, twigs, leaves, etc. Of particular interest in this design is the large fuel storage hopper A (thus allowing for the use of a bulky fuel) through which is passed the fuel agitator or feeder B, which is provided with prongs. By moving and turning the feeding rod arching of the light fuel is prevented and a continuous fuel supply ensured. A special feature of the Wells producer is that it is built up of small cast-iron plates, thus facilitating its erection in the more inaccessible parts of the world, where the only fuels available are those for which this producer has been designed.

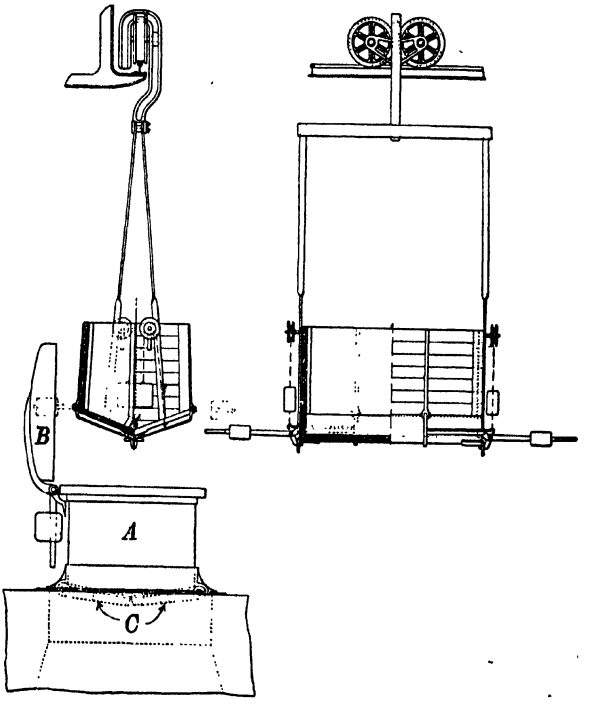

Fig. 113.—Fuel-charging Device for Wood Producer.

The main amount of hand poking of the fuel bed takes place from the producer top. Not only is it easier to judge the condition of the fuel bed by viewing the fire from the top, and to counterbalance any unevenness in feeding by raking the raw fuel to just those places where it is required, but a far better purchase upon any clinker "grown on" to the lining can be had by the man from the top, since he can put his whole weight behind the poker.

Hand pokers differ in length and strength, depending upon the purpose for which they are used. To poke the top layers of the fuel bed (for caking), or to rake about the top fuel, either thin solid iron bars or welded or solid drawn iron tubes of larger diameter with solid ends may be used. To poke away the clinker longer and heavier bars are used, the lower end being of steel and having a chisel point; and whilst the top poking bars may have ordinary handles as shown in fig. 109, clinker poking bars on large producers generally have a T head, which enables the operator to use a sledge hammer when very heavy clinker formation is to be dealt with.

Fig. 116 shows the details of a plug type of poking hole; a solid cast-iron plug C_6 with handle and machined plug end fits gas-tight into the plug seat C_5, which is shown 2″ diam. An internal cast-iron ring C_4 protects the crown bricks against damage by the poker bars. Since the poking bars gradually wear the plug seats out of their true shape, these should be arranged for quick renewal.

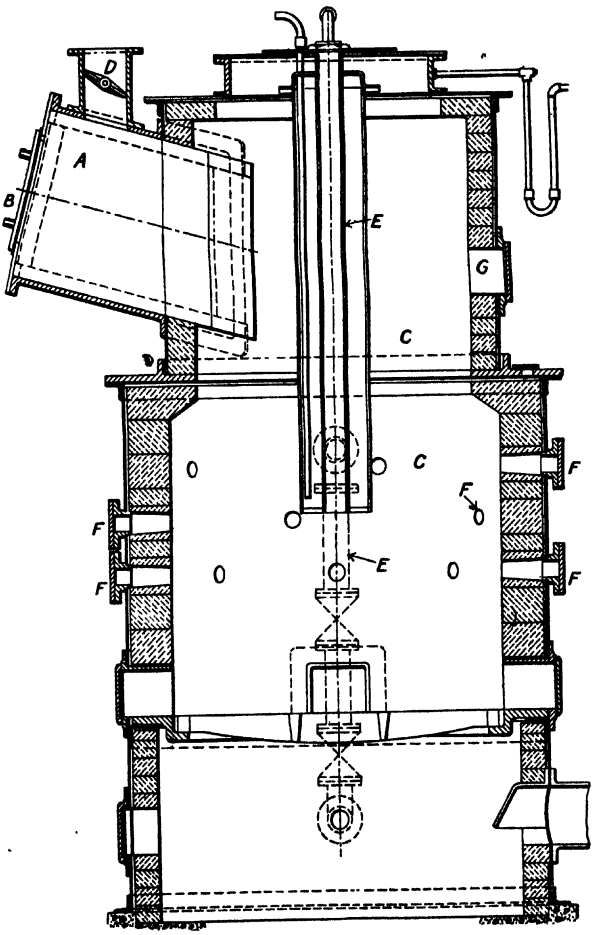

Fig. 114.—Cambridge Log Wood Producer.

Fig. 117 shows the detail of a ball type of poking hole, which consists of a 6″ diam. machined cast-iron ball (19) which by its own weight makes a gas-tight seat with the machined cast-iron seat (18). The ball is provided with a hole right through for the poker, which is generally made $\frac{1}{16}$″ to $\frac{1}{8}$″ smaller in diameter, to reduce the gas leakage loss during poking.

When the pokers practically fill up the poking hole it will be clear that the man cannot see the effect of the poking work which he is carrying out. A good producer man, however, does not need to *see*; he can *feel* it with the poker. All the same, on some gas producers it has been customary for years to have poking holes of a diameter very much in excess of that of the poker, the effect of this being that not only is there a large leakage loss of gas during poking, but also that the escaping gas causes the men to be more averse to poking work than they would be otherwise. For this reason poking holes have been designed in which a current either of steam or air is blown across the open poking hole into the producer, thus preventing gas from escaping to the atmosphere.

Figs. 118 and 119 show the Pintsch type of air-blown poking hole: *a* is the poke hole plug, *b* the plug lever, which is provided with a second arm linked to the air plug cock *c*, through which air can be admitted from the low-pressure (ring-shaped) air main *d*, supplied from the producer air blowers. When poking is to take place the lever *b* is pressed down till the plug *a* is lifted clear of its seating; the lever with plug is now swivelled round the centre line of the cock *c*, which simultaneously admits air from *d* into the annular space *e* below the poke hole seating. It is claimed that the use of air in contradistinction to steam does not blur the operator's vision of the fire; further, that since the pressure in the ring air main is adjusted to be only slightly above that of the gas pressure, very little air is blown into the producer. Be this as it may, with producers having a gas outlet temperature above 500° C. it would appear that the air will automatically ignite and burn with the gas at the base of the poking hole in the brick crown, thus causing a thermal loss, the magnitude of which will depend upon the length of poking and the pressure difference between the air and the gas.

Fig. 120 shows an example of a steam-blown poke hole such as is employed on the Goetz gas producer. In this case the operator adjusts the amount of steam admitted to a small ring main (with slits) round each poking hole to such a point that gas is just prevented from escaping. The blowing in of too much steam should be avoided on hot gas producers, since, apart from the steam waste incurred, it retards the combustion of the gas.

It is clear that the steam or air pipes being placed above the platform level, as in figs. 118 to 120, may cause inconvenience when walking about at the top; this point is taken care of in the Wellman producer with steam-blown poking holes shown on the photograph reproduced in fig. 121, which also gives a good general idea as to the relative position of the fuel storage and charging hoppers.

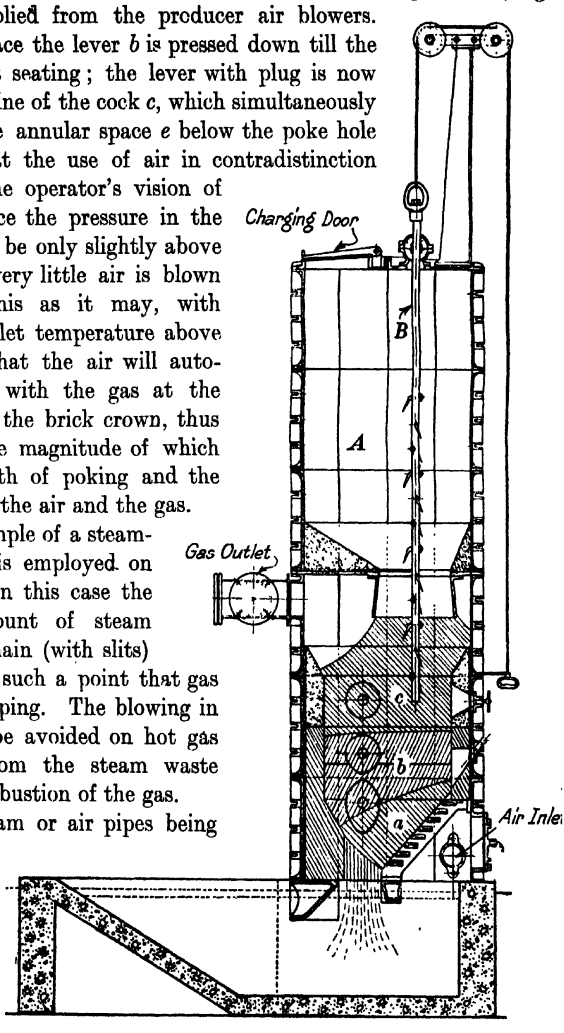

FIG. 115.—WELLS WOOD REFUSE PRODUCER.

Such complications as steam- or air-blown poking holes are best avoided where possible, it being better to make provisions in the producer design whereby either

hand poking can be reduced to the least possible amount, or the gas pressure at the top of the producer be maintained automatically (if possible) at practically atmospheric pressure.

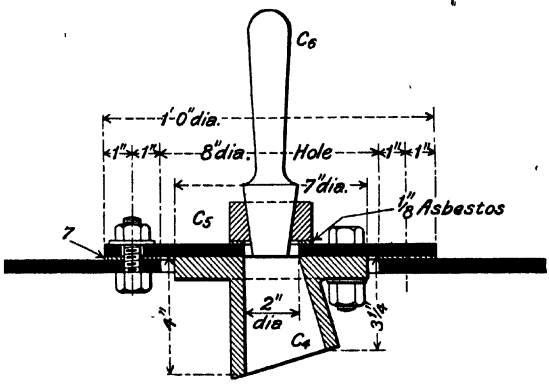

FIG. 116.—DETAIL OF PLUG POKING HOLE.

(F) PRODUCERS WITH MECHANICAL FUEL FEEDS

Such devices are practically exclusively used in connection with producers using bituminous coal; we may distinguish between two types of mechanical feeds depending upon whether the feeding arrangement also distributes the coal over the top surface of the fuel or not. In the latter case the coal feed is generally installed in combination with mechanical means for levelling, stirring, or poking the fire.

Some mechanical feeding devices are provided with coal-crushing arrangements, so that too large pieces of coal (in case of uneven grading) are broken up previous to being fed into the producer. Obviously, fuel of even grading can be more economically gasified; it is, however, doubtful whether the dust produced by the crushing of the coal does not cause a higher gasification loss than would be the case if the coal were charged without crushing by a static feed hopper in the ordinary way.

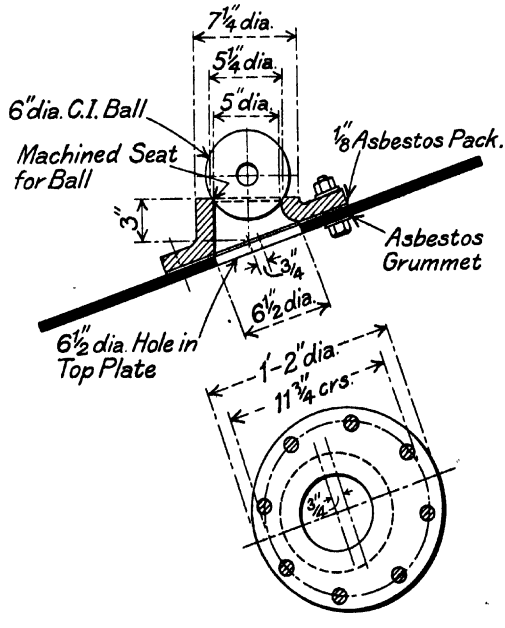

FIG. 117.—DETAIL OF BALL POKING HOLE.

For reasons explained on p. 202, even with a mechanical and continuous supply to the top of the fuel bed, hand poking of the top layers is required from time to time; consequently, the main saving effected by the installation of such a device is the labour required for charging the fuel. It is generally also possible to obtain

a more constant gas quality and a slightly higher rate of gasification. Since, as we shall see later, the agitation of the upper layers of the fuel bed is far more effective in regard to producing gas of a high and constant quality and at a very high rate of gasification than mechanical feeding *per se*, it will often be found a better investment to install a mechanical poker or fuel leveller, in addition to which (as, so to speak, a secondary consideration) a mechanical coal feed is supplied.

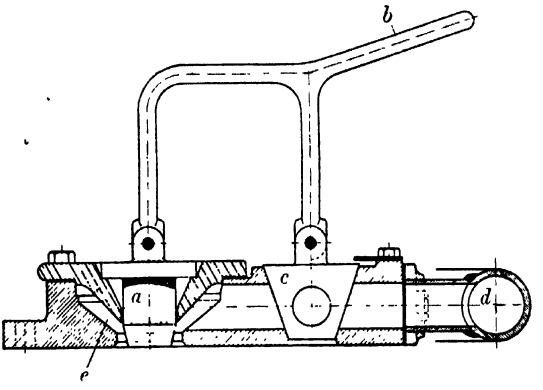

FIG. 118.—PINTSCH AIR-BLOWN POKE HOLE.

Figs. 122 to 126 show various types of mechanical fuel feeds and distributors, which need not be installed in connection with a mechanical poker, but which should all be placed concentric with the producer.

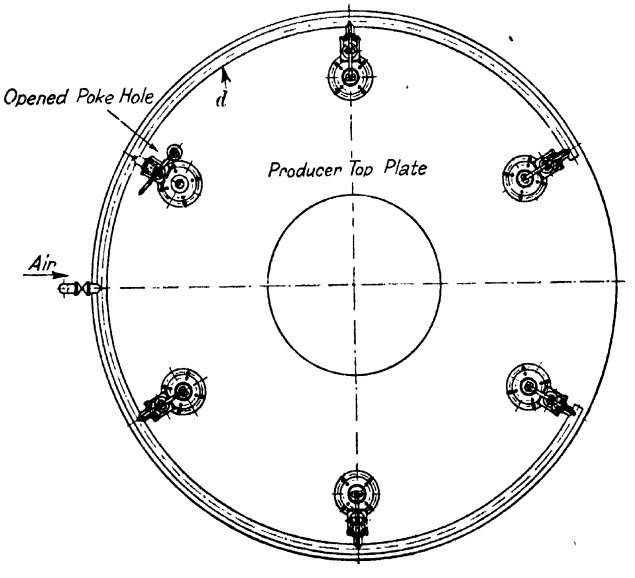

FIG. 119.—PINTSCH AIR-BLOWN POKE HOLE.

The first successful fuel feed was designed by the Swedish engineer, K. W. Bildt, and is shown in fig. 122, while fig. 123 shows a detail of the distributor. A fuel-charging chute *f* with valve *g* admits coal to the hopper *h*, through the vertical centre line of which a revolvable shaft *k* is suspended. This shaft carries at its upper end a worm wheel through which it is caused to revolve about 10 to 30 revolutions per hour, depending upon circumstances; the shaft is adjustable in a vertical direction by means of hand wheel *m* and screw thread *l*. At the lower end the shaft carries a fuel distributor *n* of cast steel.

The shaft is stayed from an intermediate bearing carried from the hopper body *h*. At the lower end the hopper body is narrowed down to a smaller

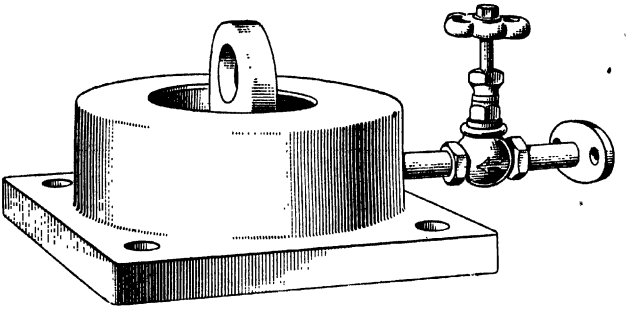

FIG. 120.—GOETZ STEAM-BLOWN POKE HOLE.

diameter *o*, from which the fuel is delivered on to the top surface *a* of the fuel distributor (see fig. 123). This top surface is designed so that the fuel falling

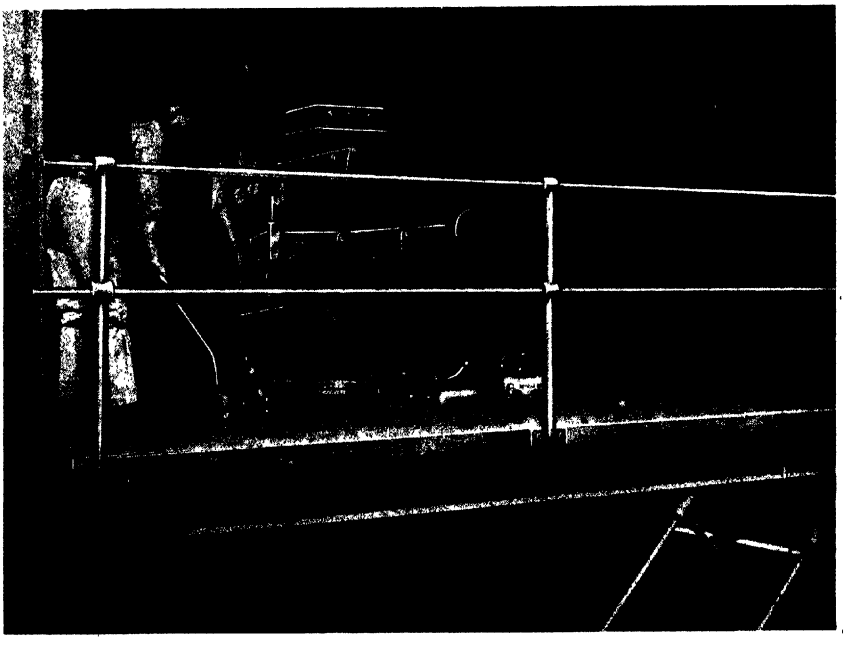

FIG. 121.—WELLMAN PRODUCER WITH STEAM-BLOWN POKE HOLES.

round the circumference is distributed as near as possible evenly over the whole fuel surface. It will be noticed that coal may either be distributed from an outwardly

inclined surface b and an inwardly inclined one b_1; in no position is the incline of these surfaces with a horizontal plane the same.

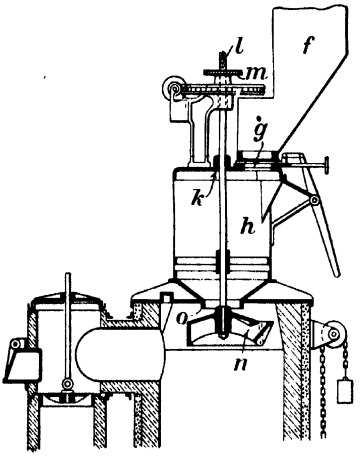

FIG. 122.—BILDT MECHANICAL FUEL FEED.

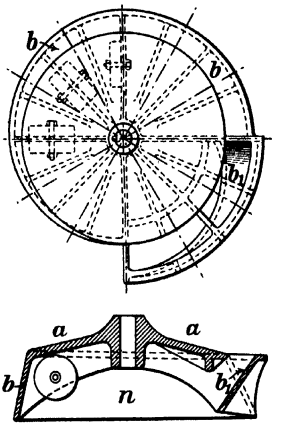

FIG. 123.—BILDT FUEL DISTRIBUTOR.

Due to the gradual burning out of the distributing discs, designs were developed wherein these were water-cooled; a typical design of these is the George or Morgan feed shown in fig. 124. A stationary coal feed hopper A carries at its lower end a ring C, which is luted into a water seal at the top of the revolvable coal-feeding drum B, which in its turn is luted at its lower end in the water-cooled producer top plate E. The coal-feeding drum B is revolved by means of a pawl and ratchet, and is suspended from the hopper A by means of a shaft F. At its lower end it is provided with an inclined water-cooled spout, which is designed to distribute the coal evenly over a sector of the fuel bed at a time.

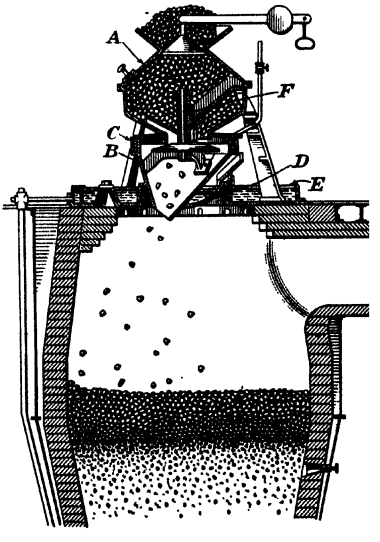

FIG. 124.—GEORGE MECHANICAL FUEL DISTRIBUTOR.

Fig. 125 shows a photograph of two gas producers built by Ehrhardt & Sehmer, and fitted with the George type fuel feeds.

As already explained under the description of static fuel feeds (p. 205), a central cone placed at various heights in reference to a fixed surrounding ring will enable the coal to be distributed more towards the centre or the edges of the fuel bed, as the case may be, or as the grading of the fuel alters. Several designs

mechanical fuel feeds based upon this principle have been developed, one of which, the Bentley type (made by Appleby & Co., London), is shown in fig. 126.

The fuel distributor A (adjustable in height) is suspended from a revolvable casting B, which rests on a ball race and is luted in the casting C, the inner surface of which serves as a coal deflector. B is revolved by the bevel wheels D operated by ratchet wheel and pawls from a reciprocating crank. At its upper end B carries a feed drum having four divisions and provided with a shaft carrying a bevel wheel E, which is revolved by rolling over the teeth of a fixed rack. Above the feed drum a water seal is provided into which the stationary fuel bunker mouth is luted. It

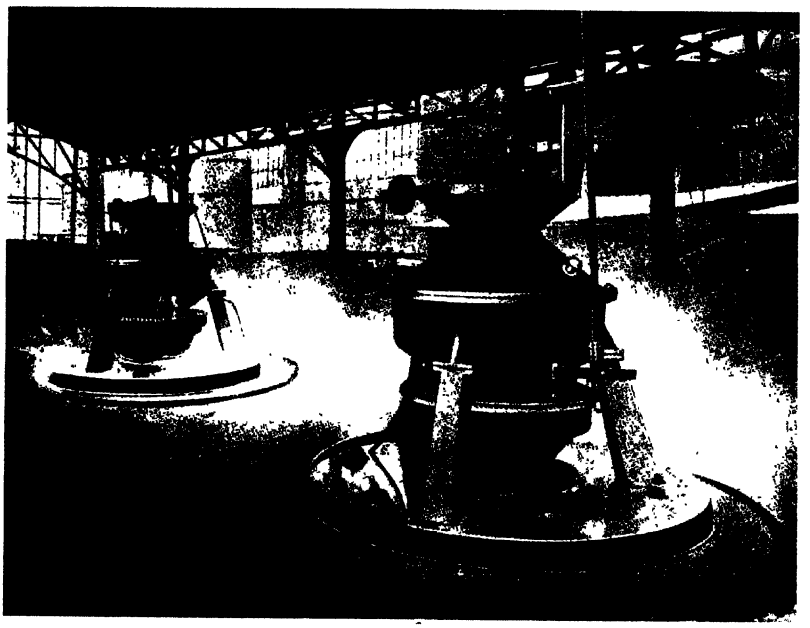

FIG. 125.—PHOTOGRAPH OF PRODUCERS WITH GEORGE TYPE FEED.

should be emphasized that any unevenness in fuel distribution caused by a possible inaccurate mounting of the cone A is counterbalanced by the fact that it is continuously revolved. Arrangements are made so that the cone can be quickly exchanged in case of damage by fire. Further, the coal feed drum can be operated by hand in case of any possible breakdown of the driving gear.

Figs. 127 to 130 show some typical designs of coal-feeding devices used in connection with mechanically poked producers, in none of which the distribution of the fuel over the fuel bed is effected by the feeding device, its only object being the saving of labour in coal handling, and the attainment of regularity in the fuel supply to the producer. Practically all such fuel feeds are a development of the rotary

stoking valve (such as shown in figs. 108 and 109), and are designed for handling coal up to a size not exceeding 4″ cube.

Fig. 127 shows the Morgan feed, which consists of a two-compartment revolvable drum A resting in a cast-iron cradle B, embracing less than half its circumference, thereby enabling the drum to rise without binding in case any tar collects on it. The fuel feed from the bunker is open and easily inspected by the operator. A sealing plate C prevents the feed compartments from being filled completely with coal, thereby avoiding the resistance (and consequent increase of power) which

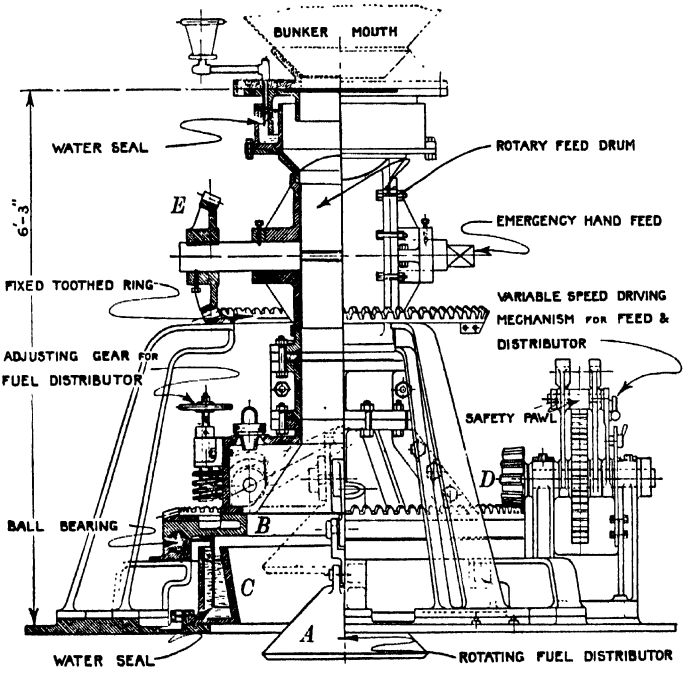

FIG. 126.—BENTLEY MECHANICAL FEED AND FUEL DISTRIBUTOR.

sometimes is set up with coal feeds in which some of the coal pieces are sheared during revolution. The coal leaving the feed drum passes through a water-cooled discharge pipe E into the producer.

Fig. 128 shows a photograph of the three-compartment mechanical coal drum such as is used on a Chapman gas producer. This drum is made slightly taper, so that by displacement in an axial direction wear may be taken up. Spiral ribs are provided on the surface of the drum to work out endwise any tar, dust, coal, or soot particles that might tend to accumulate between the drum and its casing.

Fig. 129 shows the five-compartment star feed drum as used on the U.S. Cast Iron Pipe and Foundry Company's gas machines. A is the revolvable drum fixed

inside the water-cooled casing B, the drum being revolved in the direction of the arrow. The effect of water-cooling the seating is claimed to be that tar in any escaping gas will condense and thus prevent the feed running "dry." By removal of the cover C inspection can be effected from time to time. The drum is revolved mechanically by ratchet wheel D and manually by inserting a crowbar in the holes in E.

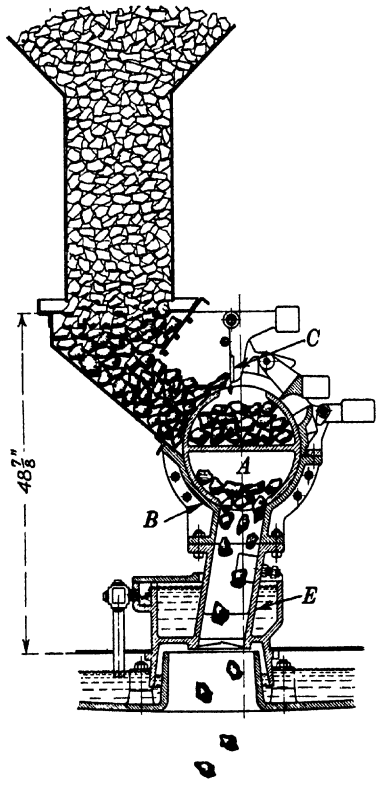

FIG. 127.—COAL FEED FOR MORGAN GAS MACHINE.

Fig. 130 shows cross section of the mechanical coal-feeding device fitted by the Wellman Company to their Hughes producers. Two such feeds are placed on the water-cooled top plate, on the same diameter but at different distances from the centre.

Each feed consists of two revolving elements, a four-vane measuring drum at the top and a five-compartment gas-tight coal-feeding drum proper at the base. The top drum is revolved in a direction which prevents the down-flowing coal from packing too tightly in the feeding drum. No grinding or crushing of the coal is said to occur between the upper half of the measuring wheel and the coal feed casing, since a good clearance is provided.

A counterbalanced deflector plate for the coal is hung above the feed drum or valve, thus avoiding unnecessary shearing of coal particles. At the back of the feeding valve seat a small stream of water (drip feed) is admitted for the purpose of keeping the tar plastic and the valve seat lubricated.

The subdivision of the feeding drum into a multiple of compartments ensures that the fuel is fed in smaller quantities, and more often than with a single-chamber feeding drum.

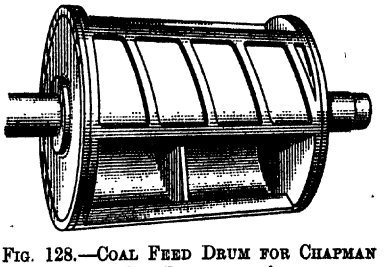

FIG. 128.—COAL FEED DRUM FOR CHAPMAN GAS PRODUCER.

The *power* required for driving the various mechanical feeding devices varies from $\frac{1}{6}$ to $\frac{1}{2}$ B.H.P. for most feeding devices designed for feeding 1 ton of coal per hour or thereabouts.

The *speed* of revolution alters with the capacity of the feeding drum and desired

rate of gasification of the producer; between 10 and 30 revolutions per hour are common normal speeds. The rate of revolution of a mechanical feed should be adjustable down to the finest limit, say 5 to 10 per cent of full load feeding capacity.

A *safety* device for the drive should be provided to enable automatic disconnection of the feed itself from the driving mechanism, in case foreign materials such as, say, pieces of iron or wood should accidentally lodge themselves in the feed. Shearing pins on the connecting-rod or a "buffer" spring are commonly employed for this purpose.

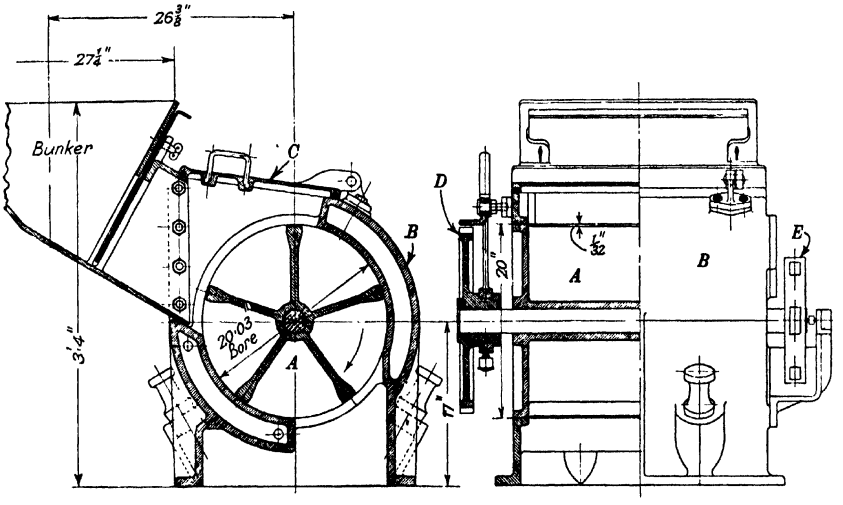

FIG. 129.—COAL FEED DRUM FOR CAMDEN GAS MACHINE.

(G) PRODUCERS WITH MECHANICAL FUEL LEVELLER AND STIRRER

In spite of the fuel distribution over the whole of the top surface of the fuel bed being even and equal, we have seen that, due to unevenness in fuel bed resistance, there is always a tendency for either one part or another of the fuel bed to burn through at a quicker rate than the average; such unevenness of burning would be equalized if fresh fuel were continuously supplied to the various parts of the fuel bed at a rate corresponding to their relative gasification. Filling up by hand poking is hard manual work, and generally entails a considerable gas loss and inconvenience to the men.

If hand poking is neglected—and this is sometimes the human tendency—the state of the producer fuel bed will grow from bad to worse, and holes of excessive

temperature will be formed, with consequent excessive clinker growth and bad gas quality.

Even where hand poking of the top layers of a fuel bed *is* maintained within the limits of ordinary human endurance, it will be found that the fuel bed temperature is not uniform over the whole top surface; in other words, every square foot of producer area is not utilized to the same extent for gas-making purposes.

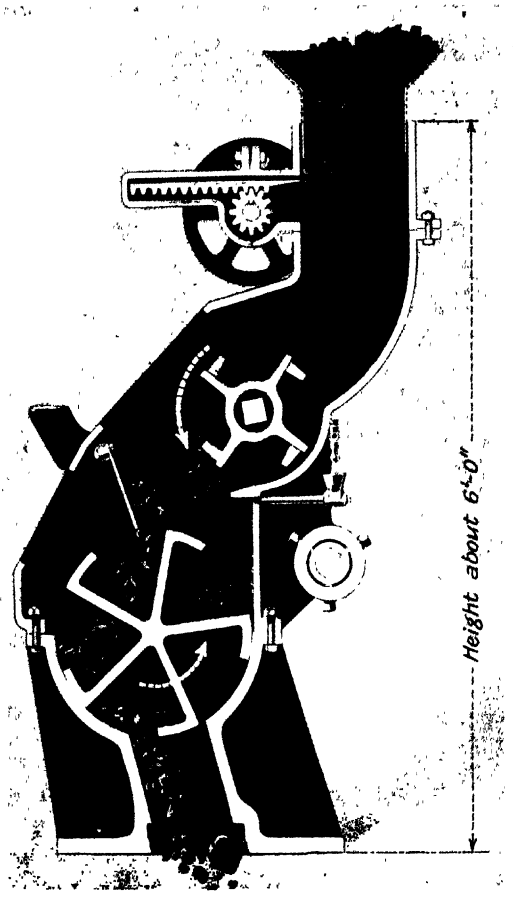

FIG. 130.—COAL FEED FOR WELLMAN PRODUCER.

When a fuel particle is introduced into a producer it falls on to the fire, and in a static producer is generally left to "look after itself" so far as gas-making is concerned. With a caking coal this means that the various fuel particles will become plastic and agglomerate to a more or less pasty layer of uneven resistance, the consequence being that a caking coal cannot be gasified at anything like the same rate as coals of less caking nature.

To overcome these difficulties producers provided with mechanical poking means are installed.

Stirring, poking, levelling, or agitating of the upper parts of the fuel bed by mechanical means combine the following advantages:—

(1) Even gasification rate throughout the whole fuel bed. Consequently high throughput.
(2) Caking fuels can be economically gasified.
(3) Constancy of gas quality.
(4) Labour saving.

The first producers with mechanical pokers were built about twenty-five years ago by Hughes in America and Talbot in England; the first installations in either country being in districts where caking coals had to be used. It may here perhaps be in place to mention that by carefully dimensioning the internal parts of a gas producer it is possible, when using coals of the less caking variety, with no more labour, to obtain just as high gasification rates on entirely static producers, and as constant a gas quality, as with completely mechanical producers, thus eliminating the necessity for the expenditure of the extra first cost and upkeep charges involved in the adoption of a mechanical gear and apparatus. However, so far as the commercial utilization of caking coals in gas producers is concerned it is quite certain that the employment of mechanical fuel agitation is an essential factor.

Speaking generally, the latest developments in the design of mechanically stirred producers have taken place in the United States of America, in which country such producers are in extensive use. We may subdivide the mechanically stirred producers into two groups :—

(*a*) Those in which the fuel body is stationary.
(*b*) Those in which the fuel body is revolved.

Obviously, in the latter case larger mechanical forces are to be overcome, since in addition to the power required for fuel bed agitation it is also necessary to expend power to revolve the producer casing with brick-lining and fuel content.

Producers of both types have found extensive use in later years, but exclusively in works using hot producer gas and requiring large gasification units. In some cases also old producers have been adapted to use the stirring devices under class (*a*), but no such arrangement is practicable with producers falling under class (*b*).

In the following description regarding the specific features of the various gas producer types, gasification test figures, as obtained by the various gas producer makers, will be given. In making a comparison of these the reader should bear in mind that in many cases the results obtained are as much, perhaps even mainly, due to the particular fuel which was available for the test referred to. In particular, fuel properties such as free burning quality, or clinkering tendency, are never indicated by an ordinary fuel analysis, and yet they will vitally affect the rate of gasification and gas quality. A fair comparison between the relative merits of the various producers can only be obtained if the respective type were worked side by side under the same operating conditions, with the same fuel, and with equally efficient labour and supervision.

Fig. 131 shows a sectional elevation drawing of a *Talbot* gas producer, built by the Power Gas Corporation, Ltd., such as is installed in some of the North-East Coast Steelworks using caking coals. The design shown is the outcome of the experience gained by Mr. Benjamin Talbot with a large battery of similar producers built about twenty years ago for the Cargo Fleet Iron and Steel Company, Middlesbrough. This producer, which was the first of its kind in England, is typical of the producers with a revolving poker and a stationary fuel bed.

Air and steam blast enters the grate (6) from the pipe (1), the upper end of

which carries a water lute (2) for sealing the revolving ash table, which rests on five

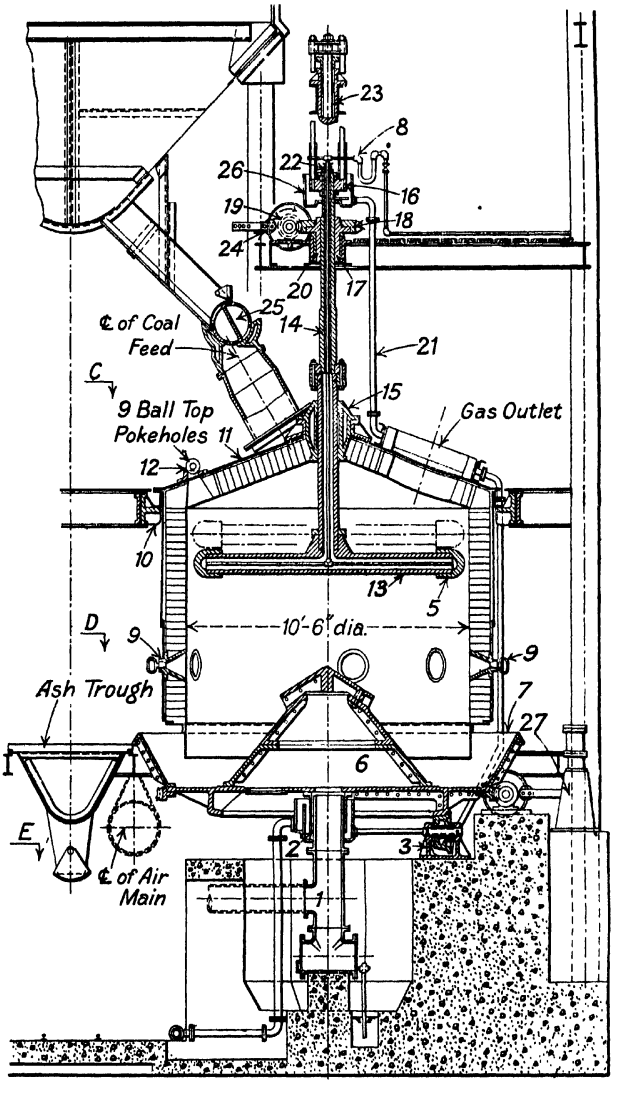

FIG. 131.—SECTIONAL ELEVATION OF A TALBOT MECHANICAL GAS PRODUCER.

rollers (3); ash is discharged from pan (7) into an ash trough, from which it may be emptied from time to time into large bogies or railway trucks.

The producer casing is suspended from the platform floor girders by means of

cast-iron brackets (10), luted at its lower end into the ash pan, and provided with a cone-shaped top plate (11). On this top plate are fixed two symmetrically placed mechanical double-chamber coal-feeding drums (25), the gas-outlet branch, and a central water-cooled poker bearing (15). Top poking holes (12) and side poking holes (9) enable clinker poking to be carried out.

The revolving poker consists of a hollow forged-steel horizontal tube (13) closed at the ends with nickel steel thimbles (5) and securely fixed to a vertical hollow steel stem (14), which is rotated about six times per hour by means of an overhead driving gear, consisting of worm wheel (18) and worm (19) agitated from an eccentric rod and friction pawls (24). The upper end of the poker stem (14) is suspended from a ball-bearing (16) which (and thereby also the poker) is adjustable in a vertical direction by means of the hydraulic cylinder (23). The amount of vertical adjustability of the poker is 12″, thus allowing for a variation in the depth of fuel bed in accordance with the fuel quality and gasification rate. To allow for this adjustability of the poker the upper end of the stem has been made square in section and arranged for a sliding fit inside the sleeve (17), which revolves inside the bushing (20), to which is bolted the driving worm wheel (18).

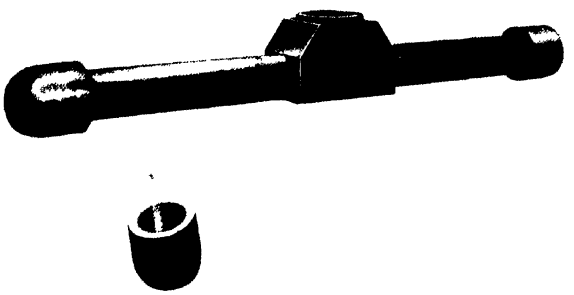

Fig. 132.—Detail of Talbot Poker.

To protect the poker (13) against damage by the fire and excessive wear it is water-cooled, water being supplied through pipe (8) and revolving stuffing box (22) to an internal ⊥-shaped pipe which delivers the water against the solid poker ends, whence it travels back again in the annular space between the pipe and the poker walls, thus cooling the latter. The spent water is discharged into an overhead stationary trough (26), from which it is removed through pipe (21) to the lower water lute (2), and then run to the works drains.

A photograph of the poker forgings is shown in fig. 132. When it is borne in mind that the external diameter of the nickel steel thimbles is 10″ to 11″, an idea of what practice demands from an apparatus of this kind will be obtained. The joint between the poker and the stem is screwed and provided with back nut and metallic washers, out of reach of the fire, the average top level of which is about level with the centre line of the poker. The wear of the poker mainly takes place on the caps, which require turning round, say, one-quarter thread about every eighteen months, complete renewal of this poker being required every five to six years.

For a producer gasifying about 1 ton of caking coal per hour (gasification rate 26 lbs. per sq. ft. and hour) the average power consumption of the poker and coal

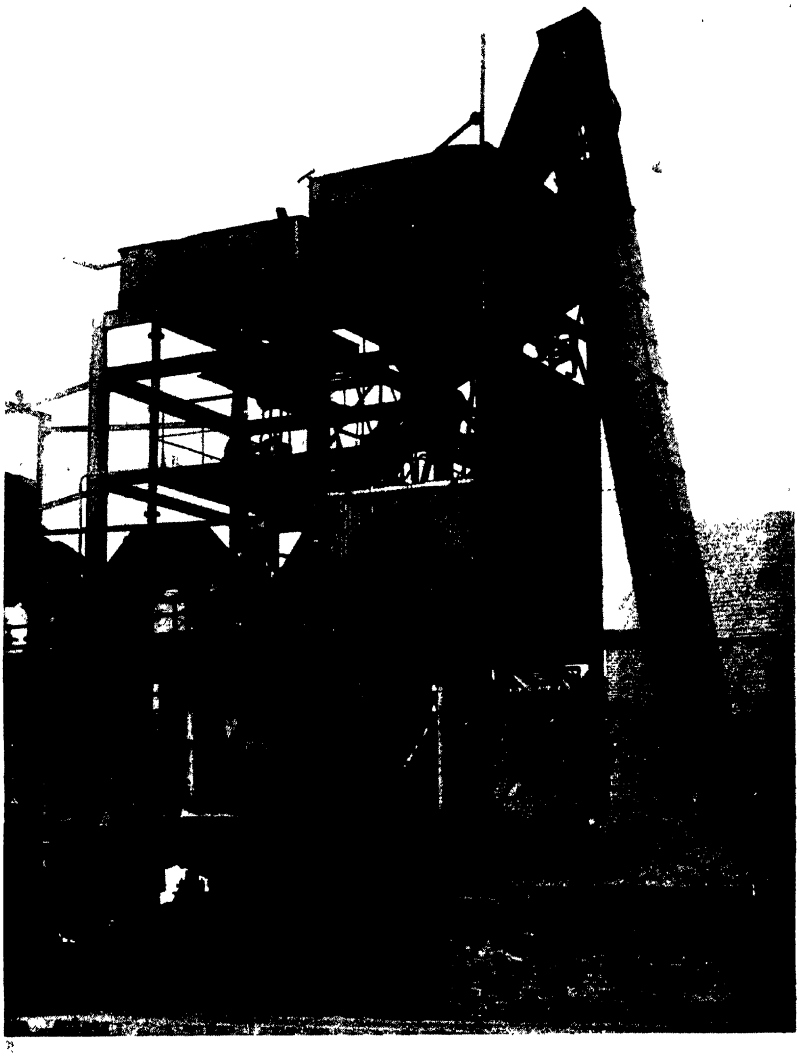

FIG. 133.—TALBOT PRODUCER INSTALLED IN GLASS-WORKS.

feeds is about 2 B.H.P., the cooling water consumption about 350 gallons per hour, while the steam consumption varies between one-third and two-thirds of a lb. per lb. of coal, depending upon the clinkering character of the ash.

Fig. 133 shows a photograph of a single Talbot producer installed in a French glass-works, using caking coal from the Lens district.

Below are given some test results of two Talbot gas producer installations :—

TALBOT PRODUCER TESTS

	Static Producer without Poker.	Static Producer with Talbot Poker.	Two Talbot Producers.
Duration of test	72 hours	72 hours	72 hours
Average gasification rate tons/24 hours per producer	19·3	30	23·4
Average gas analysis per cent:			
CO_2	10·6	8·9	7·4
CO	14·3	21·6	20·5
H_2	8·1	14·3	15·4
CH_4	4·1	4·3	2·6
N_2	62·9	50·9	54·1
Combustible gases	26·5	40·2	38·5
B.T.U.'s/ft.^{3} net at N.T.P.	111·5	156·4	139·6
Average fuel analysis:			
On sample dried at 100° C. — Moisture	7·0		1·1
On sample dried at 100° C. — Ash	14·6		6·3
On sample dried at 100° C. — Volatile	33·3		30·1
On sample dried at 100° C. — Fixed carbon	52·1		63·0
	Northumberland slack and nuts mixed.		Durham nuts.

The *Chapman*[1] producer, built by Stein & Atkinson, with floating agitator, is shown in fig. 134. It is the outcome of over ten years' experience of various types and designs of fuel-bed agitators, developed by the Chapman Engineering Co., Ohio, U.S.A.

It consists of a vertical poker stem revolved about seven times per hour, which carries at its lower end a horizontal tube (so-called " slicer ") provided with a series of fingers which plough or harrow the top surface of the fuel bed. The poker is of course water-cooled.

The producer is provided with a mechanical drum-type feed (fig. 128), which discharges the coal upon a central water-cooled fuel-distributing cone carried from the poker stem, and which is mounted on the same cast-iron body that carries the poker, with driving mechanism and 3 B.H.P. motor.

The producer shown is of the hand-ashed type, mechanical ashing means with

[1] A recent design of Chapman producer is described in *Engineering*, Nov. 10, 1922, published after preparation of the manuscript.

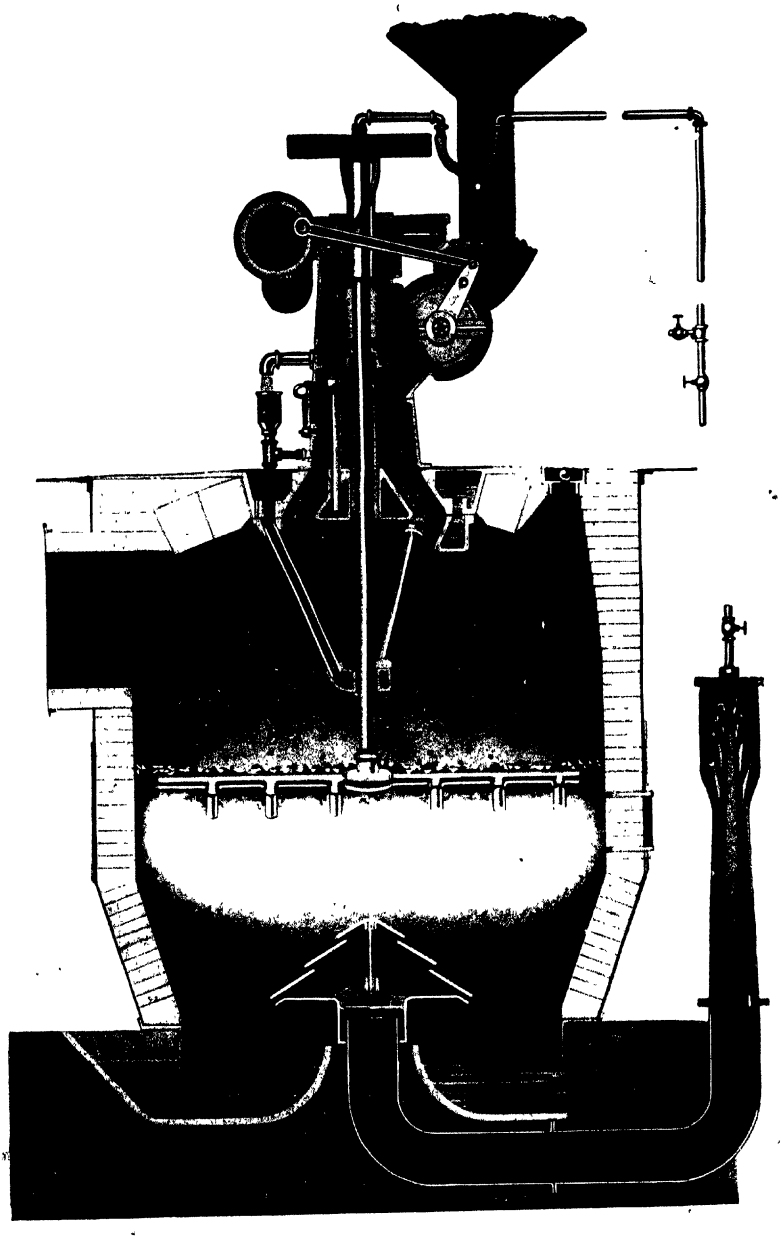

FIG. 134.—SECTIONAL ELEVATION OF CHAPMAN MECHANICAL PRODUCER.

this producer being only resorted to with fuels high in ash. With the hand-ashed producer ashing is said to be necessary only once per twenty-four hours. To enable a constant fuel depth to be maintained between ashing periods the poker is arranged so that it may rise gradually as the depth of ash zone increases and drop

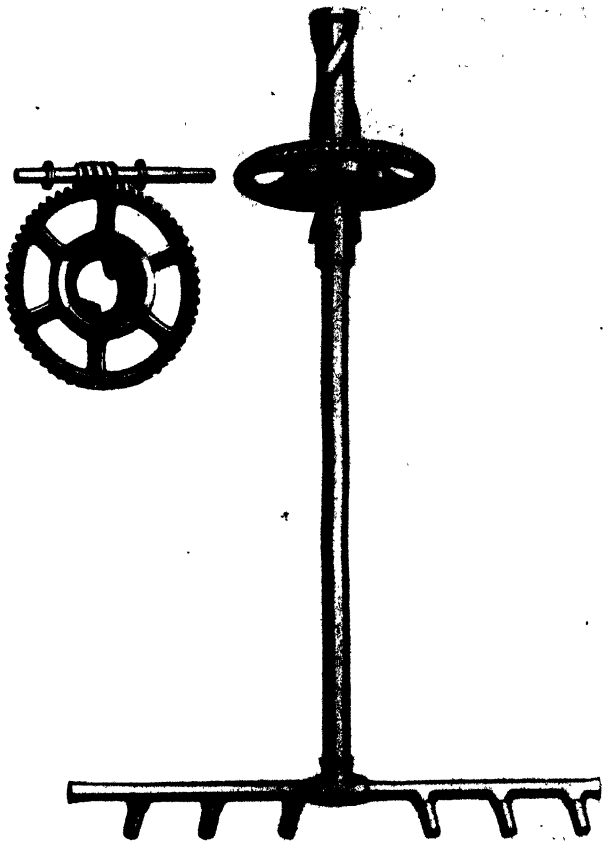

FIG. 135.—DETAIL OF CHAPMAN FUEL AGITATOR.

when the fire bed falls; in other words, it is maintained floating at a constant depth from the top level of the fire by the provision of a heavy weight at its upper end.

Fig. 135 shows more clearly how the poker is designed to give this effect. The upper end of the vertical stem is provided with a special driving head, having two large screw-like spiral flanges, which are in sliding contact with two lugs projecting inwardly from the hub of the driving wheel. Should the agitator strike an obstruction or become covered too deeply by the fresh fuel, thus requiring more power

the driving head on the poker stem will automatically "screw up" to a point at which the forces are again in balance. The stirring fingers on the slicer bar project downward and also forward (in reference to direction of revolution); the harrowed openings in the fuel bed from the fingers thus being evened up again by the slicer bar, which follows after the fingers. The depth from the base of the fingers to the top of the fuel bed is generally from 8″ to 14″, and can be regulated by the adjustment of the weights used in the weight box at the top.

The horizontal slicer is made from special seamless tubing about 3″ in diameter, while the stirring fingers are made from high-carbon steel, and can be replaced when worn out. Fig. 136 shows the effect of seven months' continuous wear on a stirring finger, and how the shape has now been modified to enable still longer use.

The cooling-water consumption is about 1 cubic foot per minute.

The following figures are given by the makers as the result of a sixty-hour comparative test made on two 9′ 4½″ internal diameter mechanical grate producers, the one being hand-poked, and the other fitted with Chapman agitator.

	Agitated Producer.	Hand-poked Producer.
Coals used: Holly Bank, Kingsbury Nuts, Earl of Dudley.		
Average analysis:		
Fixed carbon	58·94 per cent	Exactly similar fuel was used in both producers.
Volatile matter	27·34 ,,	
Ash	13·72 ,,	
Moisture	11·87 ,,	
Total carbon	67·12 ,,	
Calorific value, B.T.U.'s per lb. net	11,880	..
Average gas analysis:		
CO_2	4·4 per cent	9·6 per cent
CO	26·9 ,,	22·6 ,,
H_2	14·7 ,,	13·2 ,,
CH_4	2·9 ,,	2·8 ,,
N_2	51·1 ,,	51·8 ,,
Calorific value, B.T.U.'s per cub. ft. net	162·3	142·3
Rate of gasification per hour	21 cwts.	14 cwts.
Gasification per sq. foot area of producer lining	34·2 lbs.	22·7 lbs.
Blast temperature °C.	55·2	55·2
Blast pressure	3″ to 5″ w.g.	3″ to 5″ w.g.
Carbon in ash	6·14 per cent	6·5 per cent

The heating value of the gas is given only for comparative purposes, both producers supplying hot raw gas for furnace use.

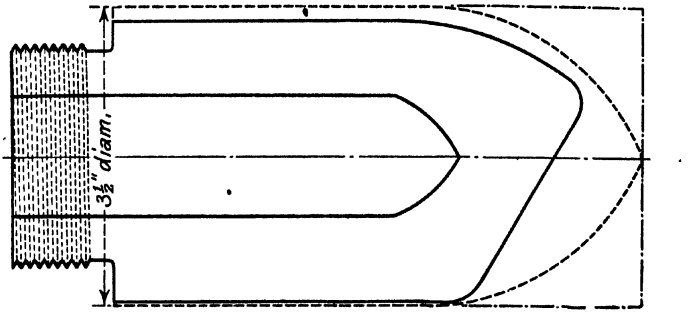

FIG. 136.—DIAGRAM OF WEAR ON CHAPMAN STIRRING FINGERS.

——————— Heavy full line: after seven months' continuous wear.
- - - - - - - - - Dotted line: as originally made.
—·—·—·— Dot and dash line: as now made.

It will be seen that the agitated producer gives a 50 per cent higher gasification rate than the hand-poked producer, while the average gas quality at the same time was increased 14 per cent; obviously the gas from the mechanically stirred producer would have a more constant heating value than that from the hand-poked producer.

Both the Talbot and the Chapman producers comprise a single poker or stirrer, but producers with a multiple of pokers or stirrers have been put to work—for instance, producers by A. B. Duff, Bentley, and Smith Gas Engineering Company.

Fig. 137 shows A. B. *Duff's* producer (built by Dowson & Mason). It consists of a revolvable top plate (*a*) carrying two pokers (*b*) which are mounted in ball sockets and forced to make an oscillating movement in the top layers of the fuel when revolved; the

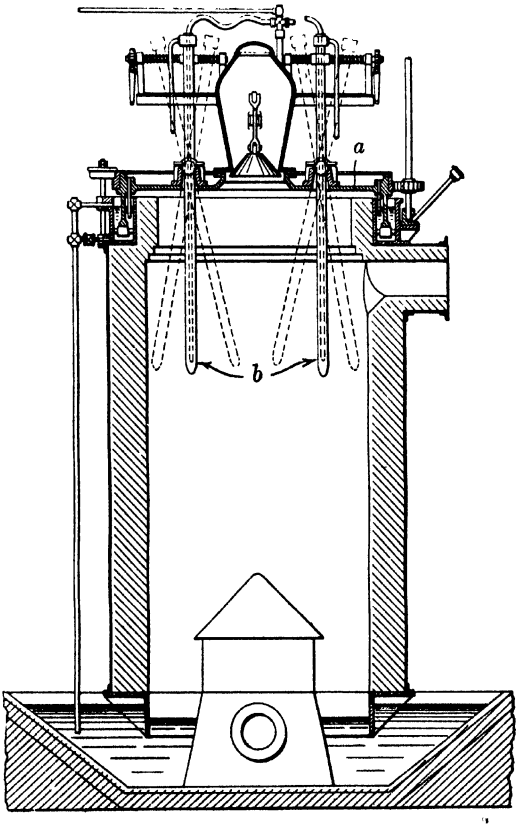

FIG. 137.—A. B. DUFF'S MECHANICALLY POKED PRODUCER.

first of these producers was built about twelve years ago on some by-product recovery plants in this country; it was found that the gasification rates of these producers was about 50 per cent higher than similar producers (but without stirrers) working in the same battery.

The *Bentley* mechanical fuel agitator (built by Appleby & Co.) is shown in fig. 138. The fuel-feeding and distributing device shown in fig. 126 is used in combination with two water-cooled agitators with stirring fingers. The agitators are fitted into a bearing ring and plate which also carries the fuel-feeding device; the whole is rotated on a ball-bearing by variable speed gear which allows for independent adjustment of the speed of the feed as well as the pokers, the maximum speed for the poker being 6 revolutions and for the feeding drum about 60 revolutions per hour.

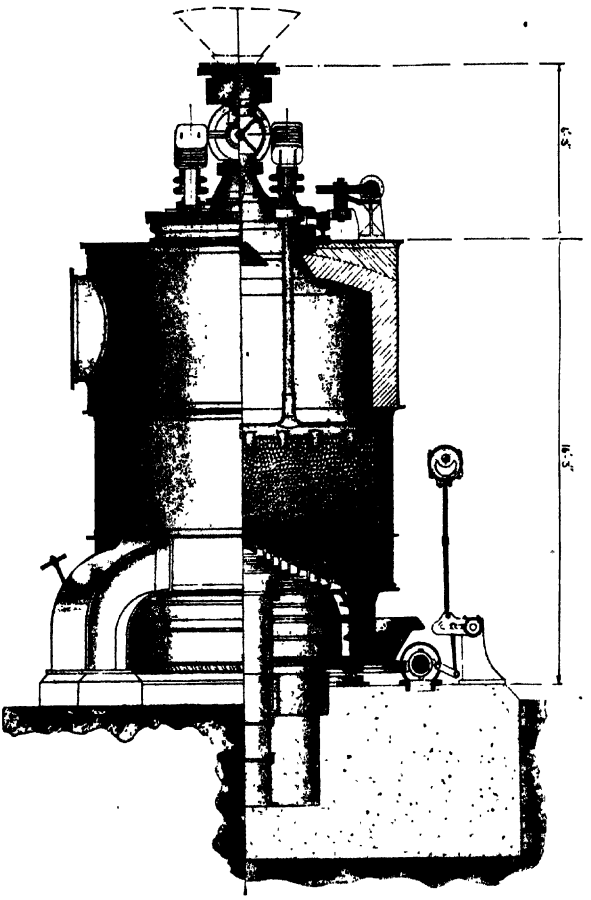

FIG. 138.—BENTLEY'S MECHANICALLY STIRRED PRODUCER.

The pokers are of the floating balanced type, and as such will adjust themselves automatically to the varying depths of the fuel bed. Due to the combination of the stirrers with a mechanical grate and water-jacket, it is claimed that hand-poking of the fire can be eliminated.

In table on page 236 are given a series of recent tests carried out on a 9′ 6″ internal diameter producer such as illustrated, over a long working period, when no hand-poking was carried out. The fuel in use was a mixture of Derbyshire and Lancashire slack and nuts, while the rate of gasification varied from about 1100 lbs. per hour minimum to 3000 lbs. per hour maximum.

The *Smith* mechanically poked producer, built by the Smith Engineering Co.,

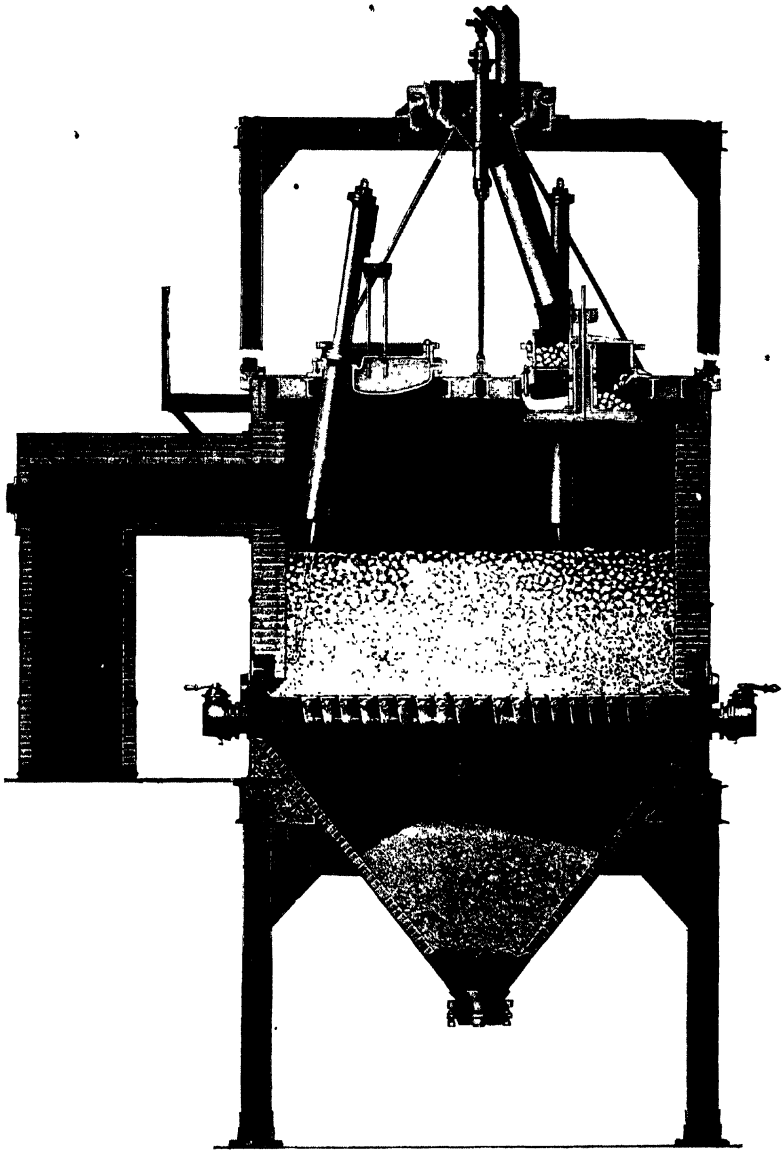

FIG. 139.—SMITH GAS PRODUCER WITH MECHANICAL POKERS.

Ohio, U.S.A., is shown in fig. 139. The top or head of the producer is water-cooled and suspended from a large roller-bearing mounted in the steel framework

CO_2	CO	CH_4	H_2	N_2	Total Combustible Gases.	Blast Saturation Temperature ° C.
5·0	24·3	3·77	14·47	52·46	42·54	58
3·6	26·4	4·17	13·07	52·76	43·64	61
4·0	27·4	3·65	13·26	51·69	44·31	54
3·1	28·3	4·14	14·48	49·98	46·92	57
3·6	28·8	3·15	14·42	50·03	46·37	58
3·0	29·2	3·16	14·14	50·50	46·50	59
3·8	26·2	4·2	15·19	50·61	45·59	58
4·8	26·4	3·69	12·65	52·46	42·74	55·5
3·4	27·4	4·14	14·72	50·34	46·26	57
5·0	25·0	4·2	14·00	51·80	43·20	56
5·4	25·4	3·68	14·68	51·24	43·76	57
4·0	26·0	3·71	13·37	52·92	43·08	56
3·2	28·6	4·16	13·32	50·72	46·08	57
3·6	28·0	4·10	13·68	50·62	45·78	58

which rises from the foundation. Sway rollers are mounted on the periphery of the head to prevent swaying of the head, but not to take any of the weight. Power for rotating the head is derived from a steam cylinder mounted thereon. The engine is provided with a dash-pot through which oil is circulated, and so arranged that the speed can be easily controlled. On the larger producers two pokers are mounted, one upon a turret which works over the entire fuel bed, while the other, being stationary, is working vertically around the producer wall. The poker mechanism consists of a cylinder approximately 5′ long, the piston rod extending out through the lower end of the cylinder and serving as a poker. The operation of these pokers is so interlocked with the turning engine that the head cannot be rotated while the poker is in the fire, which would result in bending a poker. The pokers operate alternately under ordinary circumstances, or the operator can cut out either one of the pokers so that it becomes inoperative.

The turning engine rotates the head through a pawl-and-ratchet device, the sequence of working being as follows: At the forward stroke of the turning engine the pawl engages the ratchet on the top of the stationary producer shell and rotates the head. During the return stroke of the engine steam is admitted to one of the poker cylinders so that the poker descends into the fire and is withdrawn during the return stroke of the engine. The engine then makes another forward stroke, moving the head around to a new position, and during its return stroke the second poker operates. The engine cannot make its forward stroke until the poker has returned to its former stationary position.

The coal is fed down from the bunker through a large roller-bearing and a pipe leading to the hopper on top of the coal feed. This feed consists of three principal

members—a hopper mounted upon a stationary plate, and a base riveted to the producer head which carries the weight of the entire coal feed. Between the base and the top hopper casting is a cylindrical member with several ports, which is rotated by a pawl-and-ratchet device connected with the turning engine. It will have been noted from the above that the head is rotated during the forward stroke of the turning engine. On the return stroke another pawl engages the coal feed and turns the port member. These ports are so arranged that air cannot get access to the top of the producer, which is worked under suction. Coal falls from the port upon the distributing plate and is raked off this distributing plate by a special shaped finger which distributes the coal uniformly over the fuel bed.

Tar is sprayed over the surface of the fuel bed by means of a steam jet. This spraying device is also placed on the producer head. Steam for the mechanism and the tar spray comes down through the centre of the main supporting bearing, and the pipe lines are fitted with universal joints to permit the head to turn.

The makers supply three different sizes of producers of 9′, 14′, and 16′ external diameter, the grate areas of each producer being 44, 100, and 157 square feet respectively. Depending upon the quality of coal the rate of gasification may be between 20 and 35 lbs. per sq. ft. and hour, or, given a suitable coal, the largest producer will gasify 5500 lbs. (about 2½ tons) of coal per hour, which load is said to be subject to over 20 per cent overload rating for two-hour periods.

From a plant operating at the Ford Motor Company's works, Detroit, using coals of a varying quality (the average load per producer in a battery of five producers being from 3500 to 4000 lbs. per hour), the makers communicate the figures given in the table below as representing daily operating results taken on this plant during April 1922, when the tar condensed out from the gas was returned to the producer and sprayed on to the fire.

Date.	Coal Analysis.			Gas Analysis.				
	Per cent Vol.	Per cent Ash.	B.T.U. per lb.	CO_2	CO	H_2	CH_4	Net B.T.U. per cub. ft. N.T.P.
April 7	35·32	11·54	12,897	2·5	29·1	11·6	4·4	175·2
,, 11	36·34	9·67	12,682	3·6	27·9	12·3	4·3	172·1
,, 18	36·12	5·09	14,350	3·5	28·3	11·0	4·0	166·9
,, 19	37·2	5·05	13,844	..	..	..	..	..
,, 20	35·68	10·02	13,199	3·5	27·2	11·7	3·7	163·3
,, 21	..	..	..	2·8	28·7	11·1	4·1	169·5

Figs. 140-142 illustrate a producer with the Hughes type of mechanical poker (built by Wellman-Smith-Owen Company). The first Hughes producer was built in 1897, the present design being the outcome of the experience obtained since then, when dealing with American fuels; it is typical of the producers with revolving fuel bed.

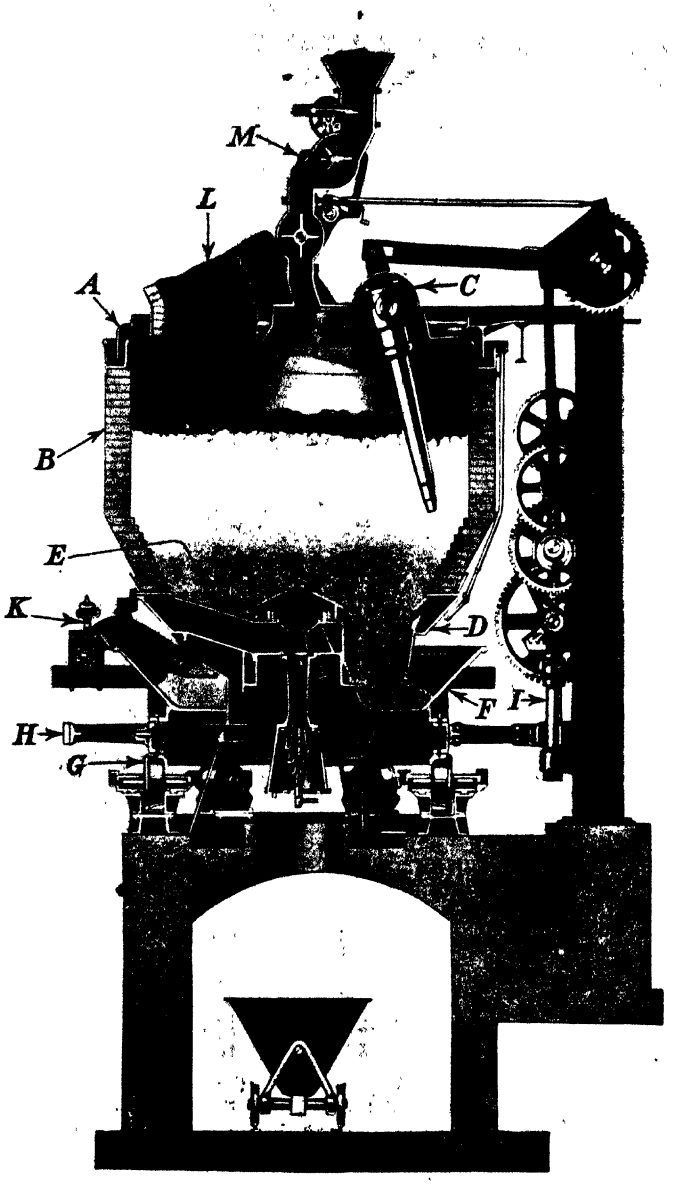

FIG. 140.—WELLMAN (HUGHES) MECHANICAL PRODUCER.

This producer (fig. 140) is provided with a stationary top A, while the casing B

(with the fuel) and the grate are revolved, the poker C being forced to make an oscillating movement in the upper part of the revolving fuel bed.

The producer body is provided at its lower end with a cast-iron ring D, which partly serves to seal the body in the cast-iron ash pan, and partly to support the former from the latter by means of a three-arm hollow cast-steel spider E, which also serves to conduct part of the air blast to the circumference of the producer.

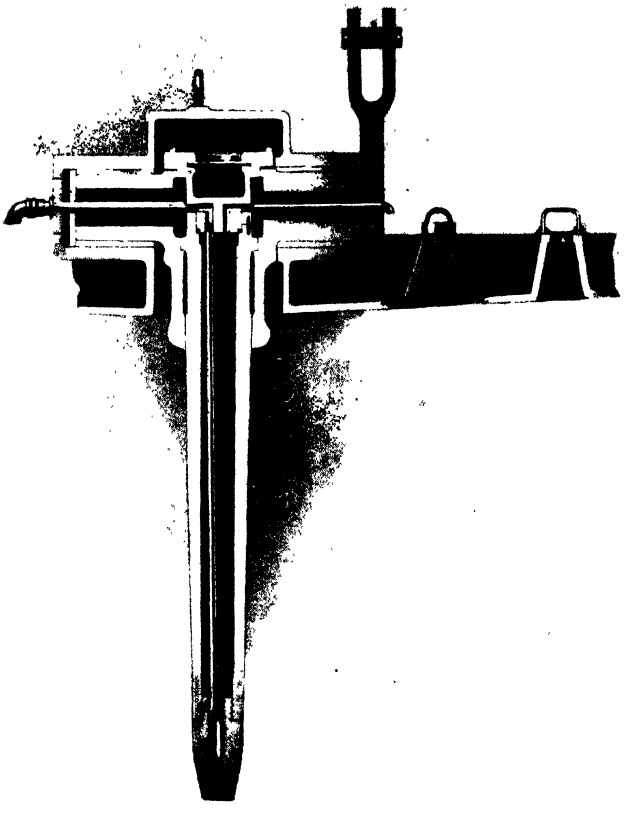

FIG. 141.—DETAIL OF POKER OF WELLMAN (HUGHES) MECHANICAL PRODUCER.

A central blast nozzle is also provided, the producer thus being of the duplex blast type. The ash pan F, in its turn, is provided with a track running on six conical carrying rollers G resting on the foundation, and with a spur gear H, by means of which it is revolved by the driving mechanism I. To discharge the ashes from the producer a *stationary* ash shovel K is provided; this shovel has the shape of a plough blade, and is fixed to a pivot in such a way that it can be either pushed into the ash pan to remove the ashes or swung right out of the lute.

The top of the producer is water-cooled, made from cast steel ribbed and flanged to provide seatings for gas outlet pipe L, mechanical feed M, poker C, and a series of hand-poking holes; it is carried from the floor girders, and an external ledge seals it in an upper water lute fixed to the revolving casing.

The water-cooled poker, shown in detail in fig. 141, is suspended from trunnions in the top cover, and made to swing from centre to edge of fuel bed nearly in a vertical plane by means of a crank and crank-shaft operated from the driving mechanism I. Due to the simultaneous revolution of the body the path of the poker in the fuel bed will be a series of loops such as is shown in fig. 142, the result being that the fuel bed is continually broken up and not given the opportunity of caking together.

The tip of the poker causes agitation even in the decomposition zones, and is therefore subject to hard wear and requires replacement about once per annum; if a spare poker is at hand, the replacement can be effected without serious interruption of the work.

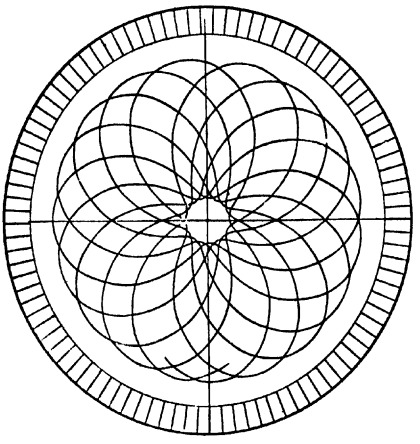

Fig 142.—Diagram of Poker Path.

A producer of about 10′ internal diameter is stated to gasify about 3000 lbs. of bituminous gas coal per hour containing about 6 per cent of ash, 1 per cent moisture, and 35 per cent volatile matter (38·2 lbs. per sq. ft. and hour). The power consumption is from 2 to 3 B.H.P.; the water consumption about 1200 (U.S.) gallons per hour.

Using a bituminous coal from the Pittsburgh district, the average gas analysis from a 7-battery producer plant was :—

CO_2	4·07	CH_4	2·95
Illuminants	·72	H_2	10·59
O_2	·22	N_2	55·55
CO	25·9	Net B.T.U. per cub. ft. (N.T.P.)	158·8

while the carbon content in the ashes varied from 11 to 9·76 per cent.

Figs. 143-145 illustrate the Morgan "Gas Machine" (built by the International Construction Company). The principle upon which this producer is designed is that the gas-making should be carried out with the least disturbance of the fuel bed either manually or mechanically.

There can be no doubt that this principle of gas-making is a good one, but whether it can be applied to the gasification of fuels of all qualities is a different matter, as obviously every fuel will conduct itself differently in the producer, depending upon its particular caking or clinkering tendencies. All the same, the

results obtained by this gas producer bear out the fact that certain coals are best left to " look after themselves " if a producer gas of good quality is to be obtained.

Although the producer body and ash pan are revolved while the water-cooled top remains stationary (similar to the Hughes producer), the top of the fuel bed is

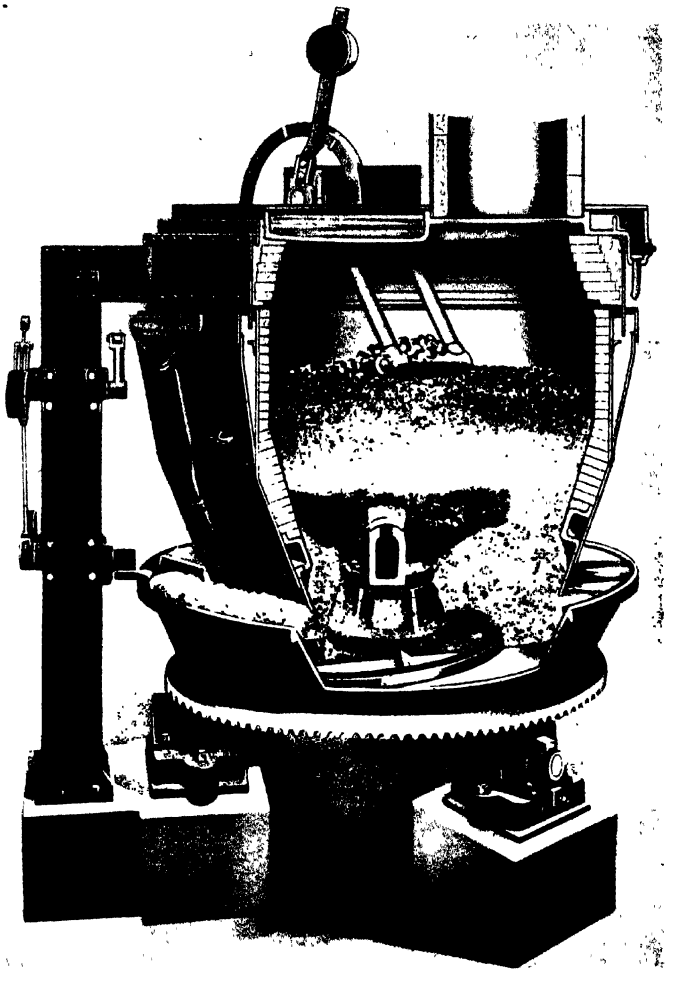

FIG. 143.—MORGAN GAS MACHINE.

not agitated; further, ash removal is arranged to take place at one and the same time all round the fuel bed.

The fuel, which is charged by the water-cooled double-chamber drum feed shown in fig. 127, is *levelled* during the revolution of the body by a water-cooled

U-shaped floating bar, which is fixed in trunnions on the top plate, and provided with a weight of adjustable leverage to enable the pressure of the leveller on the top of the fire to be controlled. The levelling bar extends from the centre of the producer to the wall on one side, thus constantly scraping the surface of the fuel and filling up any holes, without unduly turning over the fuel. Fig. 144 shows a view of how the fuel leveller may be removed for repairs and replaced by a spare one, a process which is said to last only twenty minutes.

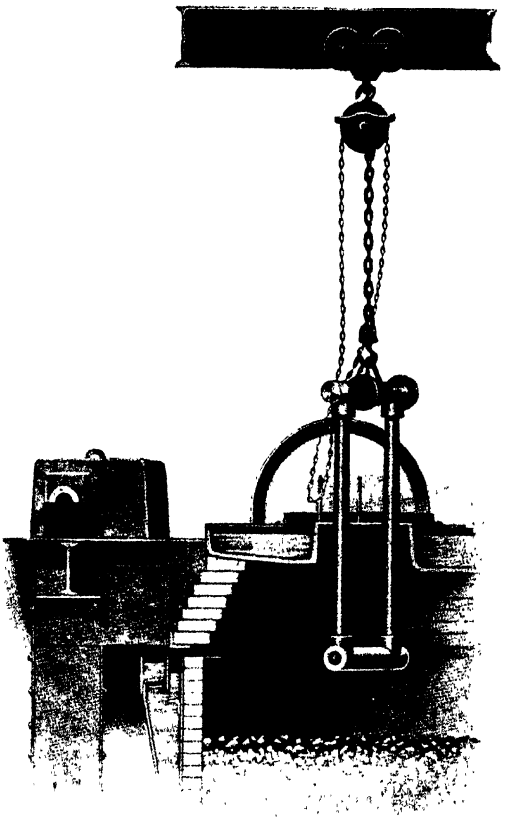

FIG. 144.—REMOVAL OF FUEL LEVELLER FROM MORGAN GAS MACHINE.

The producer body rests on a three-armed spider carried from the ash pan, which also serves to distribute part of the blast to the fire before it passes to the circumferential air distributor; a small quantity of blast is also admitted through a central hood. Fig. 145 shows this spider type support clearly and also the ash-removing device, which consists of a spiral-shaped bar ending in an ash discharge plough. Normally the ash-removing device revolves with the gas producer and ash pan; when it is desired to remove ashes the plough (with spiral displacer) is stopped and maintained stationary during one complete revolution, when it is again automatically released to revolve with the gas producer. The levers used for this purpose are clearly shown on the left in fig. 143.

A producer of this type 10′ internal diameter can gasify 3000 lbs. of coal per hour (38·2 lbs. per sq. ft. and hour), and noteworthy is the low-power consumption claimed of $\frac{3}{4}$ B.H.P., when it is borne in mind that the number of revolutions per hour of the producer generally varies between 5 and 7.

In the table on following page is given the averages of five consecutive weeks' gas analyses taken on a battery of these producers when the average gasification rate

was 2700 lbs. of coal per hour (34·4 lbs. per sq. ft. and hour) and the steam consumption measured at $\frac{1}{6}$ lb. per lb. of coal.

Volume per cent:	1	2	3	4	5
CO_2	3·5	3·6	3·3	3·3	3·7
C_2H_4	·7	·8	·8	·8	·9
CO	29·8	28·7	29·2	29·2	28·7
H_2	11·6	12·1	12·2	11·9	12·0
CH_4	2·7	2·6	2·6	2·7	2·7
Total combustibles per cent	44·8	44·2	44·8	44·6	44·3
Net B.T.U. per cub. ft. N.T.P.	172·3	170·6	172·6	172·7	172·9

Figs. 146-149 illustrate the R. D. Wood "Heavy Duty" gas producer (supplied by various firms in U.S.A.). It consists of a stationary ash pan (in concrete), a revolving body, and a stationary top carrying two water-cooled revolving pokers, mounted at different radial positions.

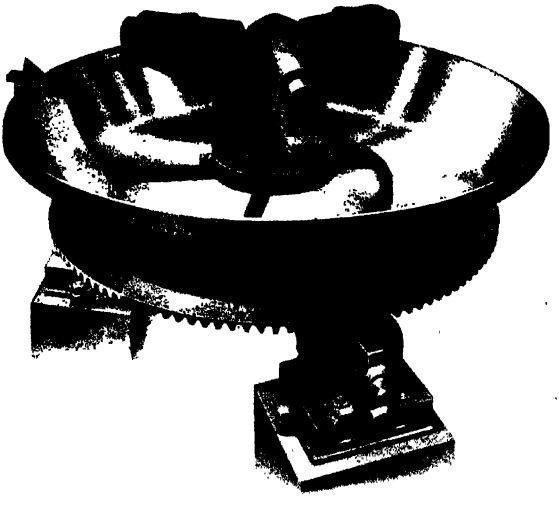

FIG. 145.—ASH PAN WITH GRATE BODY SUPPORTS FOR MORGAN GAS MACHINE.

Referring to fig. 146 and fig. 147, which show sectional elevation and plan view of this producer, A_1 is the bracket carrying the mechanical drive, as well as roller A_2 for supporting the revolving body; four additional but smaller supporting roller brackets are provided. The revolving body contains a water lute B at the top and a casting C at the base, which seals it into the concrete water and ash lute.

The grate D is of the flat stepped type, while the ashes are removed by a series of ploughs and scrapers E, and pushed into an ash pocket arranged in the foundations.

The stationary top is provided with a mechanical coal feed F (see fig. 129), gas outlet G, four sight and poking holes H, and two mechanical pokers I. All the mechanical parts are operated from the main drive at A_1, through counter shaft K and chain drive to main top shaft L, revolving at about 7 to 8 R.P.M.

Each of the mechanical pokers (see detail in fig. 148) is made from a solid

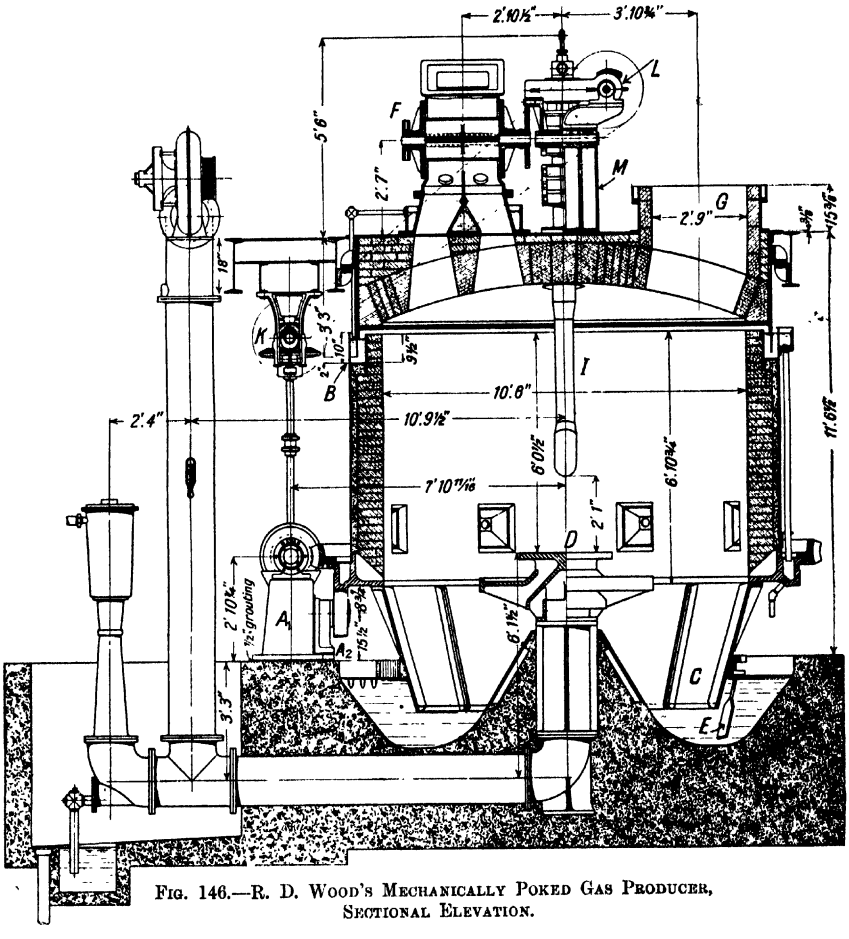

FIG. 146.—R. D. WOOD'S MECHANICALLY POKED GAS PRODUCER, SECTIONAL ELEVATION.

steel forging, bored out to $3\frac{1}{2}''$ internal diameter and provided with an internal $\frac{3}{4}''$ diameter pipe for water-cooling; its lower end is closed with a cap and curved from the centre line of the upper end, which is mounted on two bearings bolted to a main girder casting M extending right across the producer top. By means of a worm drive the pokers are revolved around the axis of their upper end at a rate of about one revolution in $4\frac{1}{2}$ minutes, the lower end, due to its curved

shape, causing a stirring and breaking up of the fuel bed, into which it is inserted about 18″. The body is revolved at about two revolutions per hour, the two pokers thus stirring practically the whole of the upper part of the fuel bed. The

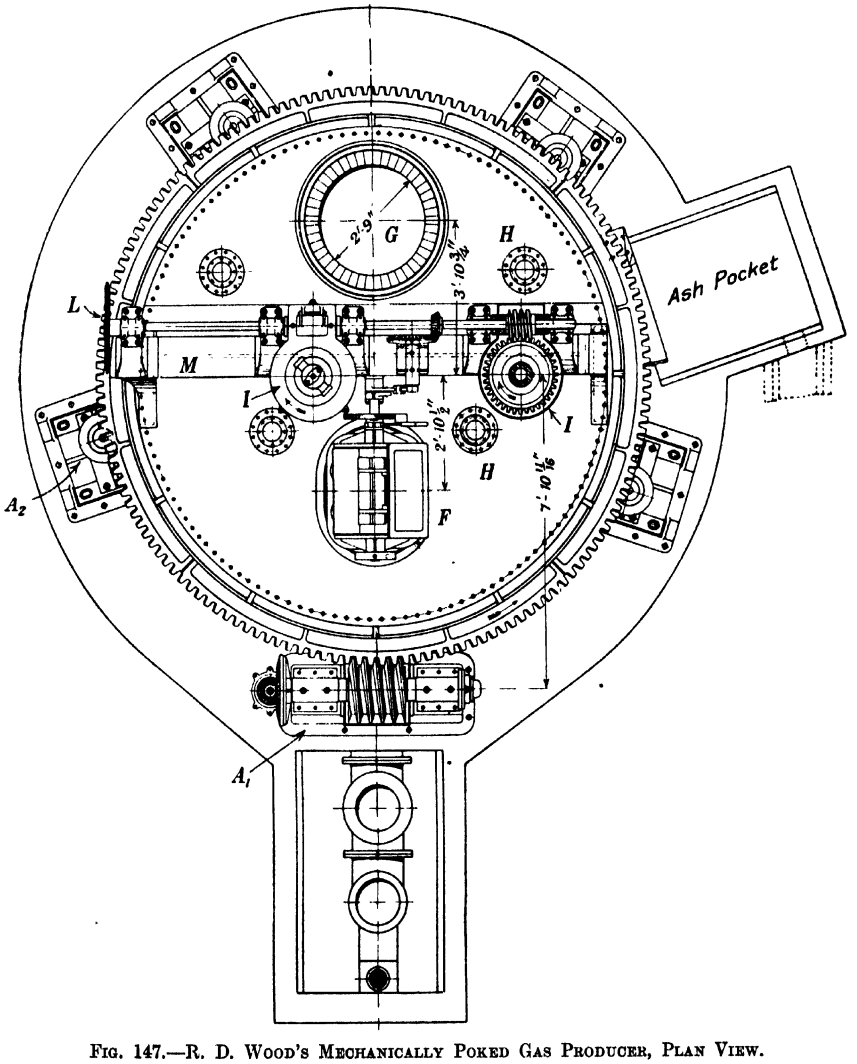

FIG. 147.—R. D. WOOD'S MECHANICALLY POKED GAS PRODUCER, PLAN VIEW.

two pokers are made exactly alike, and the time for replacement when worn out is said to be thirty minutes.

The producer having an internal diameter of 10′ 6″ requires about 3½ to

4 B.H.P. for driving, and is rated by makers at about 33 lbs. of coal per sq. ft. and hour, the maximum rate of gasification achieved during overload periods being 44 lbs. per sq. ft. and hour.

Fig. 149 shows a photograph of a producer such as is manufactured by the United States Cast Iron Pipe and Foundry Company; except for a few alterations in details, it is similar in design to the Wood producer described.

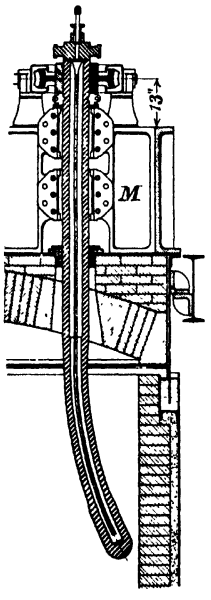

FIG. 148.—DETAIL OF POKER OF R. D. WOOD'S MECHANICALLY POKED GAS PRODUCER.

SUMMARY

Before leaving the subject of the means adopted for treating the fuel in the upper part of the producer, it may be of advantage to summarize certain conclusions applicable to general practice that may be drawn from the above.

(1) Except for fuels of very low specific "bulk" gravity, hand-fed and hand-poked producers will be satisfactory for small or single units of gas producers.

(2) For producers using fuels containing, say, over 20 per cent volatile matter (ash and moisture free basis) where constancy in gas quality is essential, continuous fuel feeding either by means of a fuel storage bell or mechanical means should be employed.

(3) Where large quantities of fuel have to be gasified with a minimum amount of labour, mechanical fuel poking, stirring, or levelling devices are advantageously employed, so long as the fuel is not such that similar results might be obtained from the same fuels in properly dimensioned static producers.

(4) Caking coals should always be mechanically stirred if more than 15 to 20 tons are to be gasified per twenty-four hours.

(*H*) PRODUCERS ADAPTED FOR WATER HEATING AND STEAM RAISING

Although in this chapter we shall mainly concern ourselves with the water-cooling systems or steam-raising devices which form part of the gas producer proper, we shall also deal with all other methods for supplying the endothermal agent (generally steam), except by a boiler heated by the products of combustion of producer gas or any other fuel, whether solid, liquid, or gaseous.

GAS PRODUCERS WITH WATER JACKETS

With the main object of preventing excessive clinker formation when using a

small quantity of steam with the air blast, it is customary on many producers to substitute the brick-lining in the *lower* part with a water-jacketed portion.

Such a procedure is certainly effective from the point of view of minimizing the hand-poking labour involved when dealing with a clinkering fuel, but no inconsiderable amount of heat is lost to the water used for chilling the sides of the fuel bed. From the operating results given below it will be seen that the loss may be

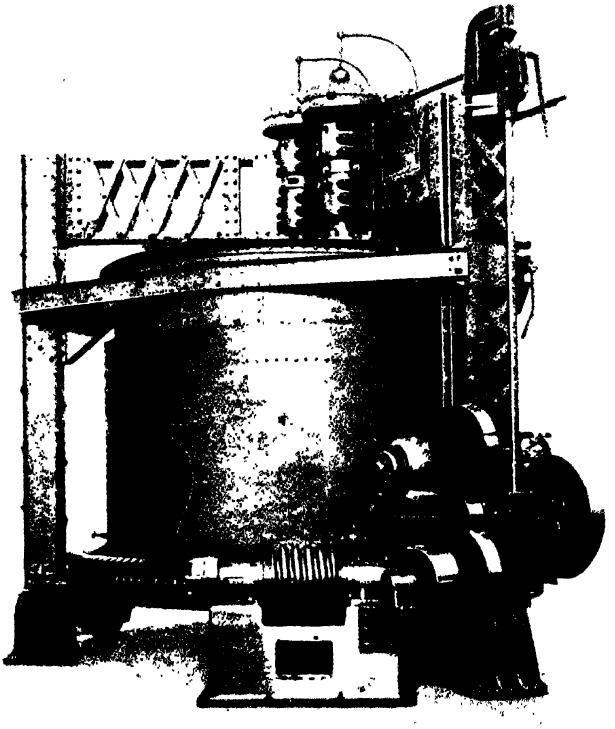

FIG. 149.—PHOTOGRAPH OF UNITED STATES CAST IRON PIPE AND FOUNDRY COMPANY'S HEAVY DUTY GAS PRODUCER.

nearly 10 per cent of the heat in the fuel gasified, although in good practice it is likely to be less. All the same the gas quality will always be affected by a chilling of the combustion zones.

One of the earliest forms of water-jacketed producers is that of Kitson shown in fig. 65, while the most commonly used water-jacketed design is that used by Von Kerpely (fig. 66) with his first mechanical grate producer. Another type of water-jacketed producer is the Pierson shown in fig. 110.

In its essential parts the water jacket of a mechanical grate producer is a 3″ to 5″ wide annular space between an inner steel casing about $\frac{5}{8}$″ thick, and an outer casing say $\frac{3}{8}$″ thick; the former casing is in direct contact with the fire, and to the latter are fixed angle curbs for carrying the producer, and a suitable number of hand holes for cleaning out from time to time any scale or mud which may be deposited from the water. The depth of a water-jacketed part of a producer may vary from 2′ 6″ to 6′, but about 3′ depth should be ample with most fuels.

The water is generally supplied at the base and removed at the top of the water jacket, thus eliminating any possibilities of air or steam locks at the top. The temperature range of heating the water depends upon its degree of purity, a maximum temperature of 40° to 50° C. being generally permissible with unpurified water, and up to 80° C. being usual with water of boiler-feed quality.

The quantity of water to be used for chilling the internal surface depends upon (*a*) the area of such surface, (*b*) the permissible temperature range for the water available, and (*c*) the nature of the fuel used. Apart from this that part of the surface which surrounds the incandescent zone will require more water for cooling than the remaining surface in contact with cooler zones.

For a temperature range of 70° C. the approximate figures given below for water quantity used per unit of area and time may be taken to represent usual practice.

	Gallons of Water per hour per sq. ft. of Heating Surface.	Cubic Metres (tons) of Water per hour per sq. m. of Heating Surface.
Coke nuts	10	About ·5
Bituminous fuel	8	,, ·4
Lignite or brown coal . . .	4	,, ·2

A water-jacketed producer having a cooling surface of 130 sq. ft., using gas works coke at the rate of 16 cwts. per hour, required per hour 11 gallons of water per sq. ft. The heating value of the fuel was 11,000 B.T.U. per lb. and the water range was 70° C., consequently the thermal loss due to heat removed in the jacket water was—

$$\frac{130 \times 110 \times 70 \times 9 \times 100}{16 \times 112 \times 11{,}000 \times 5} = 9{\cdot}15 \text{ per cent of the heat in the fuel gasified.}$$

Various proposals have been made with a view to recovering this thermal loss and the expense of supplying the water, such as making use of the hot water for heating purposes or as boiler feed. Another suggestion which has immediate bearing on gas producer operation is to circulate the hot water between the jacket and an enclosed cooling tower, in which the air used for the gas producer is passed in a counter-current direction to the hot water. In this way the water is cooled suitably for use again in the jacket, while the air is heated up and becomes saturated with

steam, thus in many cases eliminating the necessity of supplying steam from any other source for use in the gas producer. This system of air saturation is similar to that employed on the Mond process (p. 280). The extra first capital outlay required by the installation of an air-blast saturating tower and pumps for a battery of water-jacketed producers is only of minor consideration when the elimination of a separately fired boiler installation and its consequent working costs are borne in mind. To enable air-blast temperatures such as are usually employed (above 50° C.) to be used, the water cannot be cooled to atmospheric temperature by the gas producer air blast, consequently it is necessary to circulate the cooling water at a higher rate corresponding to a temperature range of 10° to 20° C. between, say, temperatures of 50° and 80° C. The employment of such higher average temperatures in the water jacket will prevent the chilling of the air blast on the inside of the lower part of the jacket, which is sometimes accepted as the cause of the corrosion difficulties.

Corrosion of water jackets has taken place in many installations, such corrosion being by no means always caused by the same factor. In one case within the author's experience the difficulties were due to the corrosive action of the cooling water and in another to careless supervision, in so far as the water supply to the jacket was unreliable. During periods when the water supply was interrupted the water in the jacket was allowed to completely evaporate and the plates became overheated and bulged.

When installing water-jacketed producers it is advisable to—

(1) See if hot water cannot be utilized.
(2) See if water available is corrosive or to what temperature it may be heated without depositing salts.
(3) Clean water jackets regularly, just as a boiler would be treated.
(4) Ensure a reliable water supply or a spare supply, which may instantly be put into action should the main source of supply fail.

Many suggestions have been made to enable the heat in the jacket water to be more efficiently utilized by converting the jacket and even the whole producer into a boiler. Such an arrangement involves of course the employment of designs suitable for resisting high pressures and the observance of special regulations attached to the employment of boilers in works practice.

Combined Gas Producer and Boiler

In 1911 the Vienna Gas Works put into operation a battery of mechanical grate producers (Kerpely type grate) of which the water jacket was eliminated and the producers were arranged to serve as boilers as well. The design adopted is shown in fig. 150, of which type these gas works now use twenty-eight in all. Fig. 150 also gives a good idea as to the general arrangement of the piping valves, etc., round the producers and in the producer house.[1]

A is the coke hopper charged from overhead coke bogies; B, the mechanical

[1] K. Marischka, *Journ. f. Gasbel.*, April 13, 1912.

grate; C and D, two annular boilers mainly serving as water and steam drums respectively and connected together with a series of vertical water tubes F, expanded into the end plates of the drums C and D. Surrounding the greatest part of the

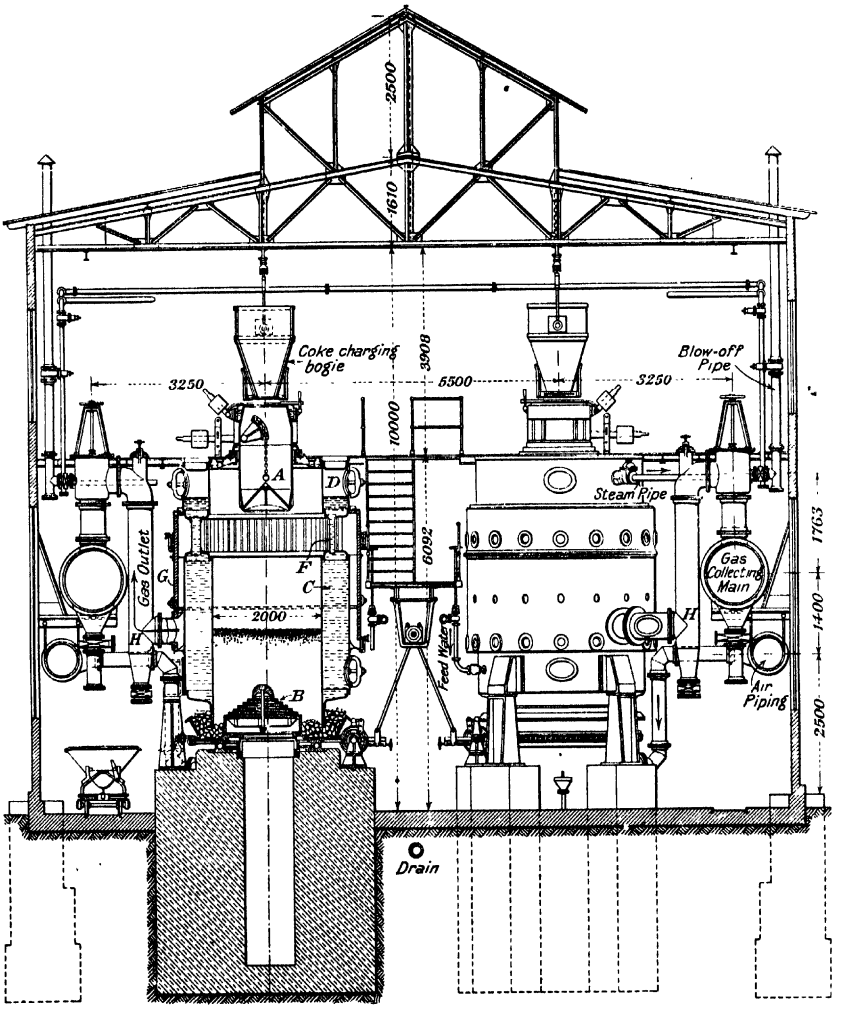

FIG. 150.—GENERAL ARRANGEMENT OF BATTERY OF MARISCHKA PRODUCERS.

outer casing of the drums is a brick-lined steel shell G, which at its lower end carries the gas outlet branch H. A series of hand holes and cleaning doors are provided on G to enable the removal of coke dust from the annular gas chamber.

Steam is raised by direct contact with the hot fuel in the lower part of the

producer and by absorbing as much as possible of the sensible heat from the hot gases in their passage from the fuel bed through the nest of tubes F to the gas outlet H. The producers are 2 m. (6′ 7″) internal diameter and provided with a heating surface of 55 m.^{2} (590 sq. ft.).

A more recent type of Marischka producer is shown in fig. 151, the main difference being that the heating tubes have been made longer and the top and bottom drums have been made into water and steam drums such as are usual in water tube boiler practice. By the provision of an internal brick ring lining a deep fuel depth is provided for, while the heating surface per foot depth is increased by the use of small tubes instead of a cylindrical shell.

In September 1921 a report upon the working of the Vienna producers was given in *Gas und Wasserfach*, from which the following information is obtained :—

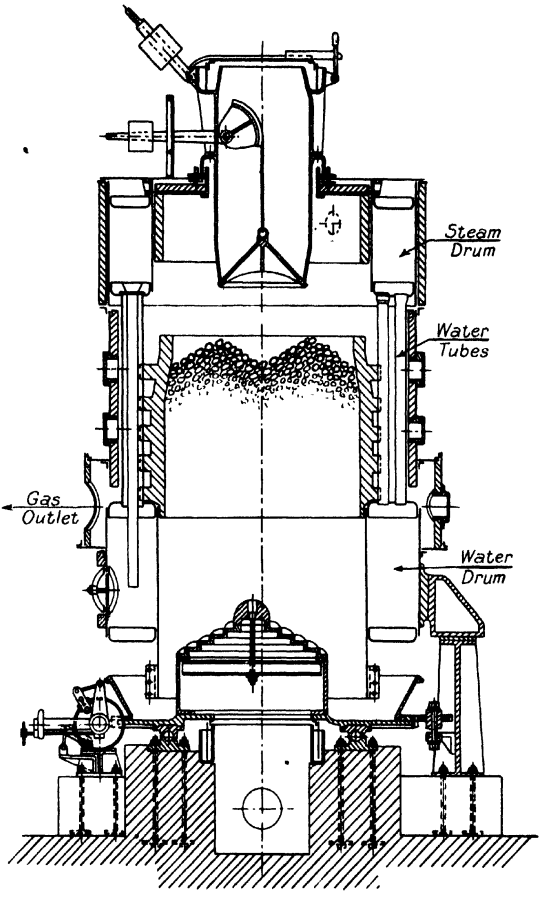

Fig. 151.—Recent Design of Marischka Producer.

Average Operating Results from January 1912 to December 1920

Average gasification rate of one producer . . .	=15·12 tons of raw coke per 24 hours (40 lbs./sq. ft.).
Maximum „ „ „ „	=27·16 tons of raw coke per 24 hours (72 lbs./sq. ft.
Coke analysis :	
Moisture	16 per cent.
Ash content	14·56 „
Coke residue	69·44 „

Coke grading:

$1\frac{3}{4}''$ to $1''$ nuts	48 per cent.
$1''$,, $\frac{1}{2}''$,, ...	47·8 ,,
$\frac{1}{2}''$,, $\frac{1}{4}''$,, ...	4·2 ,,
Average dust content in crude gas	=3·67 grams per cub. m.
,, ,, ,, washed gas	=0·1 ,, ,,
Average number of producers at work . . .	=11 (out of 14).
Number of men operating per shift	=5
Steam raised	=1·2 kg. per kg. of coke as charged.
Steam pressure	=80 lbs. per sq. in.
Steam evaporated per sq. m. surface at 80 lbs. . .	=13·8 kg. per hour.
,, ,, per sq. ft. surface at 80 lbs. . .	=2·8 lbs. per hour.
Temperature of gas leaving producer	=180° C.
OVER-ALL GAS PRODUCER EFFICIENCY	=79 per cent (to cold gas).
Over-all gas producer efficiency, including surplus steam supplied to other parts of works . .	=87 per cent.

It will be noted that coke of a large grading was used, and bearing in mind the low gas outlet temperature as well, it seems surprising that the dust carried away by the gas was so high. It is stated, however, that the best coke grading found for continuous operation was—

0 to 5 mm.	6 per cent.
5 to 9 ,, ...	2·5 ,,
9 to 11 ,, ...	15·5 ,,
11 to 25 ,, ...	70 ,,
25 to 40 ,, ...	6 ,,

while if more than 10 per cent passed through a 5 mm. screen the gas producers did not work as economically.

The producers are said to consume about $\frac{1}{4}$ lb. of steam per lb. of coke, the remaining steam being used partly for driving the auxiliary machines on the plant and partly elsewhere in the gas works. Any steam not used on the plant itself should therefore be counted as a credit in the thermal balance, so that the thermal efficiency in this case is stated to become 87 per cent instead of 79 per cent.

Each gas producer is stopped every four months for the purpose of boiler scale cleaning, which maintains two men at work for six days in spite of purified feed water being used. Doubtless this systematic and regular cleaning of the boiler sides from the scale is partly the cause of the negligible amount of repairs involved.

During the ten-year period none of the boiler plates have had to be renewed, nor is any corrosion visible, while cover plates only have been replaced at the grate level to allow for the wear caused by clinker crushing. Except for re-expanding a few of the boiler tubes no repairs of these have been found necessary. The claim is made that this absence of wear is due to the fact that the steam in the air blast cannot condense against the casing in the lower part (near the grate), such as is the case with some producers with water jackets.

Quite apart from the excellent grading of coke available for gasification, the operating results obtained are without a doubt excellent, but producers designed as high-pressure boilers must be expensive in first cost, especially as the boiler heating surface installed does not evaporate as large a quantity of steam per unit of area as in the case of direct-fired boilers. Whether in the future many works will therefore instal high-pressure boiler producers remains to be seen.

Fig. 152 shows the *Koppers-Kerpely* producer, which has recently been introduced into the U.S.A. by the Koppers Company. Its particular feature regarding

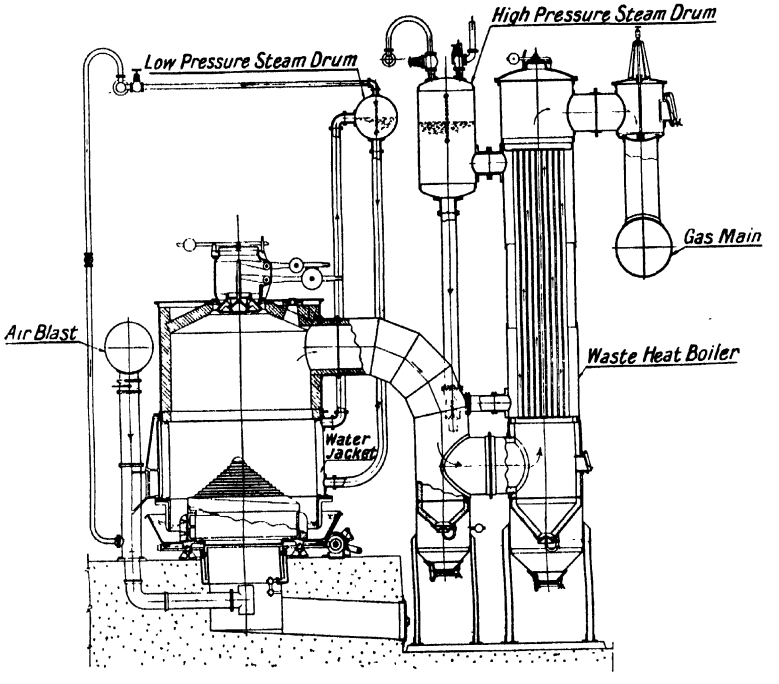

FIG. 152.—KOPPERS-KERPELY GAS PRODUCER WITH WASTE HEAT RECOVERY.

steam-raising means is the combination of a high-pressure and low-pressure boiler, the former being used in cases where the gas is to be cooled before use, while the latter is worked in conjunction with the water jacket, thus avoiding the high steam pressures used in the Marischka producer, and yet maintaining the water-jacket temperature above the condensing temperature of the air blast.

The water jacket is connected with a small overhead steam drum. A thermo-syphon circulation is maintained, the heated water rising and passing up to the drum through the upper outlet piping and the cooler return water, along with added make-up water, returning through the inlet piping placed near the bottom of the jacket. The return water to the jacket is about 105° C., while the outlet to the

boiler is 107° C. or more. Steam at the *low pressure* of about 5 lbs. pressure is generated in the drum and is mixed with the air blast to the grate.

The high-pressure waste heat boiler system consists of an arrangement somewhat similar to that now used extensively on water-gas plants. It embodies a vertical tubular boiler having a dust settling space at the bottom and a blow-off valve at the top; the tubes are maintained in contact with water, and a separate steam drum with top and bottom connections to the boiler is supplied. It is said that the coke producer gas is cooled in this boiler from 700° C. to 250° C.

The employment of a tubular boiler such as the one shown (also the Marischka type) for abstracting the sensible heat from producer gas is entirely confined to use in connection with the gasification of non-volatile fuels, such as coke or anthracite. Whenever similar designs have been used in the past for gas from bituminous fuels serious difficulties have arisen, due to continuous tube blockages by tar, soot, and dirt.

Gas Producers with Vaporizers

A very large number of various designs of self steam-raising devices are in use in connection with producers using anthracite or coke as a fuel. Such devices are especially used for smaller units of gas producers in which the extra capital outlay and working costs involved by the use of a separately fired boiler become excessive.

All of these vaporizers are designed to utilize the sensible heat of the hot gases leaving the top of the fuel bed, and to work under the same pressure conditions as the air current being supplied to the gas producer. Since their general application has been in connection with smaller units using non-volatile fuels, they are generally used in the so-called "Suction" producers, although the fact that the air current generally has a pressure slightly below atmospheric has no practical effect upon the raising of the steam.

Since the heat removed from the gas producer fuel is "sensible heat," otherwise lost when cooling the gas, this heat abstraction will have no effect upon the gas quality, such as is often the case with water-jacketed producers, or where the circumference of the fuel bed proper is chilled.

Fig. 153 shows the suction gas plant built by the Dowson & Mason Gas Plant Co. At the upper part of the producer is placed an annular tank or vaporizer A, which is supplied with water from a drip feed at B. The steam raised in A is conducted to the grate by means of the pipe C, where it is mixed with air entering through the pipe D. The hot gases leaving the fuel are forced to sweep round both sides of the vaporizer tank A, where they are deprived of most of their sensible heat content, before they escape from the producer through pipe E, whence they are led to the scrubbing plant.

When starting the producer to work the cock at the base of the vent pipe F is opened and air blown into the grate by hand blower G to the incandescent fuel bed; the gas thus made is allowed to escape at the vent pipe until of good quality. Assuming a reasonably good fire in the producer from the previous day, about twenty to thirty minutes are required to put the fuel bed into good condition, if anthracite

fuel is used. If the fire is not too "green" on the top and the water in the vaporizer has not been allowed to cool down during the previous night, some steam will be ready for gas-making at the same time as the gas is ready for the engine.

It will be clear that the amount of steam that can be evaporated in such a vaporizer will depend upon the volume and temperature of the hot gases leaving the fuel surface, the exposed heating surface of the vaporizer, and the amount of water added to the same.

When starting up such a producer, the gases leaving at the top of the fuel bed will be colder than when the producer has been at work for some time; furthermore, the temperature at the top of the fuel bed (and consequently the hot gas) will not alter as quickly as the load factors may change. Let us assume that the producer is worked at full load and the load is suddenly reduced to half; the consequence will be that less air is sucked in at D while the steam quantity given off from the vaporizer will not decrease correspondingly, since the heat stored in the vaporizer water corresponds to a higher load and because the hot gas will be in contact with the heating surface of the vaporizer for a longer time. The time-contact factor between the steam and the fuel bed being extended, due to the lower load factor, will cause the introduced steam to be more completely decomposed. The effect of all the various factors will be that the hydrogen content of the gas will increase at the moment the load is decreased, although it will gradually decrease to its previous amount as the fuel bed conditions alter.

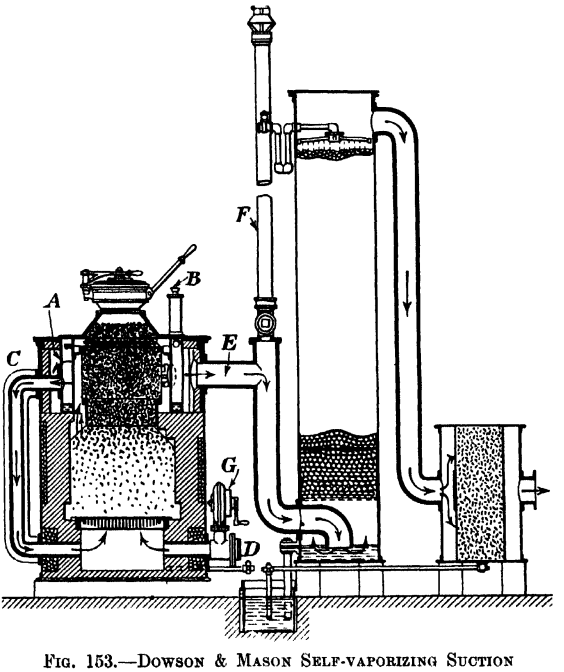

FIG. 153.—DOWSON & MASON SELF-VAPORIZING SUCTION GAS PLANT.

This alteration of the gas quality in response to load fluctuations is not only inherent to the self-vaporizing types of gas producers but to all plants in which the air and steam supplies are independently regulated. Various means for maintaining an air or steam mixture of uniform composition, whatever may be the load, form the subject of some of the vaporizer designs to be described in the following.

Fig. 154 shows the Power-Gas Corporation's self-vaporizing producer. A is the annular tank type vaporizer containing gas outlet branch, but heated only from the inside, the outside of the vaporizer being protected against excessive heat loss by insulating material. By this design dust deposits from the gas will be conveyed directly into the scrubbing plant. The air required for the producer may be supplied either partly through each or wholly through one of the two openings B or D. Air admitted from B will sweep over the surface of the boiling water and thus carry away the steam with it before it leaves through the branch C, to which may be added further air at D, the two air currents mixing with one another in the downcomer pipe H. To enable the vaporizer heating surface to be maintained under visible control a gauge glass F is fitted, while water is admitted through a cock at G. By adjustment of the position of a baffle plate at E it is possible to regulate the relative quantities of air admitted at B and D. E can be set so that at high loads some air is sucked over the top of the water, while at low loads the steam is generated under a slight pressure, so that that part of the generated steam which is not admitted to the pipe H may escape at B. Whether the relative volumes of air and steam are maintained constant may be indicated by placing a thermometer K in the downcomer pipe H.

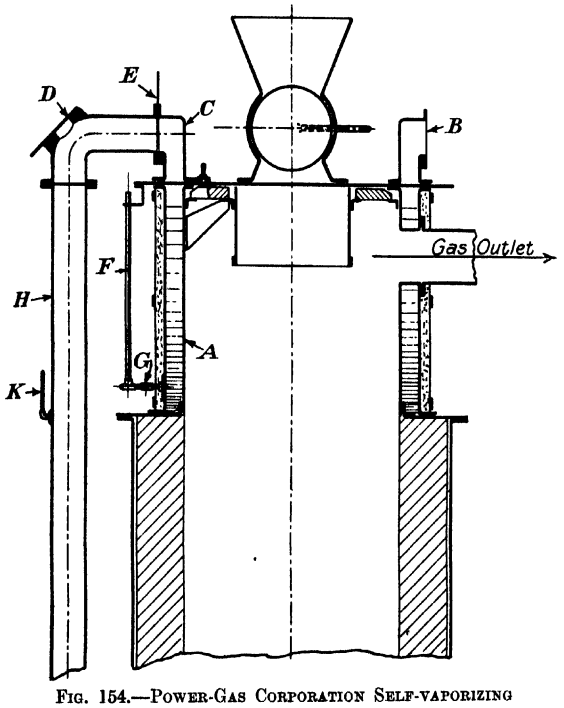

FIG. 154.—POWER-GAS CORPORATION SELF-VAPORIZING SUCTION GAS PRODUCER.

Fig. 155 shows a German design of vaporizer which, practically speaking, is the reverse construction of the Dowson & Mason type in fig. 153, in so far as what is gas space in the one is water space in the other and *vice versa*.

The vaporizer A consists of four concentric shells, through the central annular space of which the hot gases are passed before leaving at B. The air, entering at C, is passed over the top surface of the boiling water before being admitted to the grate. D is a water-supply funnel and E the gauge glass. It will be noticed that with this design of vaporizer it is difficult to poke the fuel bed properly from the top, and further that the various joints are not easy of access for repairs and inspection.

Fig. 156 shows a photograph of the top of a large mechanical grate producer such as is built by J. Pintsch, Berlin. The figure gives a good idea as to the details of the design of a large top vaporizer, while it should be noted that to facilitate poking steel castings connect up (in a water-tight manner) the top and bottom plates of the vaporizer.

Fig. 157 shows the National Gas Engine Company's self-vaporizing producer. In this design there is no tank or boiler having a water capacity such as was the case with those previously described; the upper part of the producer casing and the gas downcomer pipe are surrounded with jackets in the space between which the air and steam current is passed.

The water is supplied through a funnel B into a small trough C, from which it is allowed to overflow down a series of ribs provided on the upper part of the producer casing. The hot gases being in contact with the other side of this plate causes a rapid evaporation of the water as it flows over the ribs. To pre-heat the water before supplying it to the vaporizer, the water supply pipe is provided with a "tail end" extended through the centre of the gas downcomer E.

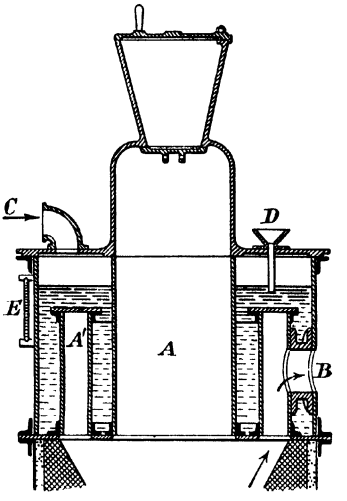

Fig. 155.—German Type of Vaporizer.

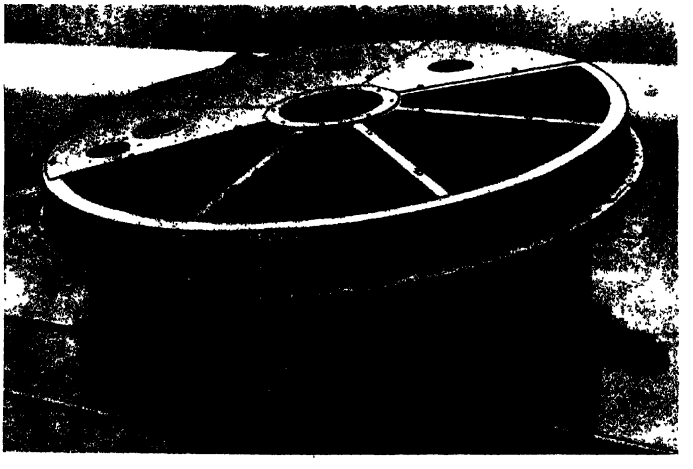

Fig. 156.—Top Vaporizer of Mechanical Grate Producer (Pintsch).

Air enters at A in the lower part of the downcomer jacket, and passes round a series of ribs provided externally on the downcomer pipe E, thus causing the air

to be pre-heated previous to its admittance to the vaporizer chamber at the producer top. In this chamber the air and steam are intimately mixed before admittance to the fire grate through the pipe F.

Fig. 158 shows an American type of self-vaporizing producer supplied by the Amsler Company, Pittsburgh, U.S.A. The design is typical of producers in which the heat for steam raising is not only absorbed from the hot gases, but also from the hot zone of the fuel bed.

A is a water-cooled bosh, B a vaporizer coil pipe placed in the direct path of the hot gas, C an air pre-heating jacket, and D an air and steam mixing chamber.

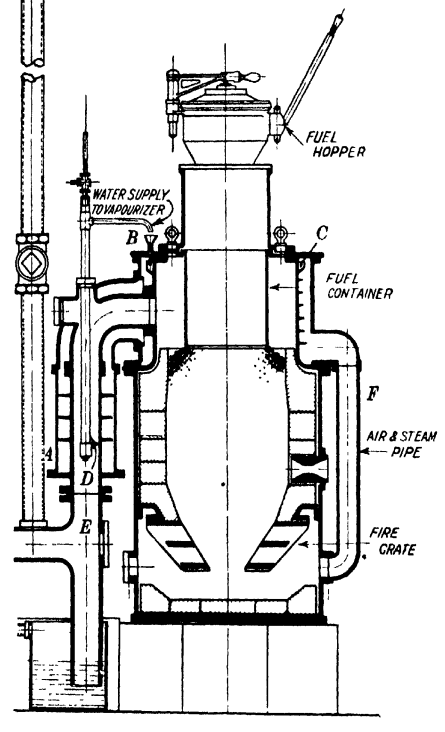

FIG. 157.—NATIONAL GAS ENGINE COMPANY'S SELF-VAPORIZING GAS PRODUCER.

Water heated up in A is conveyed by pipe E through a special water-feed controlling device (see fig. 159) to the pipe F which supplies the vaporizing coil B; this coil (which is made from solid drawn thick tubing) not only carries the hot water to be vaporized but a certain quantity of air, which is admitted at G and passed through with the water to be vaporized. Any water not vaporized in the coil may overflow from the syphon type lute H.

The main quantity of air is admitted through a flap at I, and passed through the pre-heating jacket C into the mixing chamber D, in which it meets the air and steam from the vaporizing coil B. It is stated that the vaporizer and pre-heater will cool the gas from about 660° C. to 390° C., which means that over 40 per cent of the sensible heat contained in the hot gases is returned to the producer.

Fig. 159 shows the manner in which this firm claims to have overcome the question of irregular gas quality caused by sudden load fluctuations. The principle of the device is to regulate automatically the quantity of water supplied to the vaporizer by the difference in pressure loss in the gas plant consequent upon load fluctuations. The hot upward-flowing water from the bosh is admitted to the vaporizer through a series of "U" pipes M and N. Between these two pipes are fitted an adjusting valve of the needle type and a connection to the scrubber.

The left-hand side of the "U" pipe M being in connection with an atmospheric vent will cause a constant pressure to be maintained here, while the overflow branch from M being in connection with the scrubber will be of a pressure lower than the atmospheric (due to the suction of the engine or fan), the difference in pressure being proportional to the square of the load. By setting the needle valve at a certain predetermined point it will be clear that, although water may be constantly supplied to the bosh, a larger or smaller quantity of this will flow through the needle valve to the coil, while the remainder will be run to waste. With a fuel bed in proper working order an arrangement such as the one described may work satisfactorily, but the needle valve will require adjustment from time to time, dependent upon the state of the fuel bed and the outlet temperature of the gas corresponding thereto.

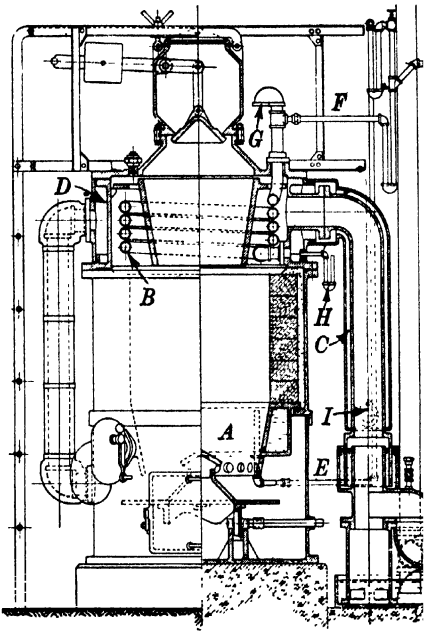

FIG. 158.—AMSLER SELF-VAPORIZING GAS PRODUCER.

Fig. 160 shows the Sharp-Basset self-vaporizing producer built by the Milwaukee Boiler Works, U.S.A., which is typical of producers in which some of the heat required for steam-raising purposes is obtained by absorbing heat otherwise lost by radiation from the producer casing.

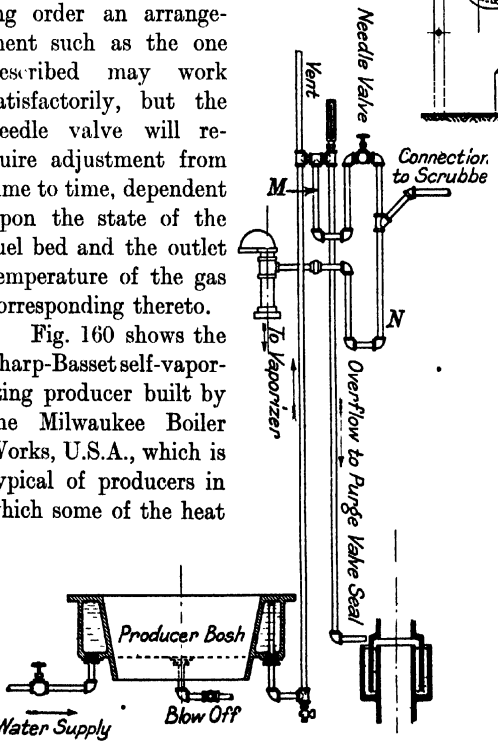

FIG. 159.—WATER FLOW REGULATOR FOR AMSLER PRODUCER.

The producer is provided with a central gas offtake, the lower level of which may be below the top surface of the fuel (see p. 209). This gas offtake pipe is water-jacketed, as is also the top plate. The water required for steam raising is allowed to overflow into a box from which the relative quantity to be added to the air blast, or run to waste, may be adjusted by a cock.

The vaporizer is a 3" annular space which is obtained by surrounding the

producer casing proper by another steel shell. The air for the producer, which enters at B, passes in an upward direction, and guided by angle baffles is forced to sweep all round the producer casing; on meeting the hot water discharged from the V-shaped trough the air becomes saturated with moisture at a temperature depending upon the relative quantities of air and hot water, as well as the temperature of the latter.

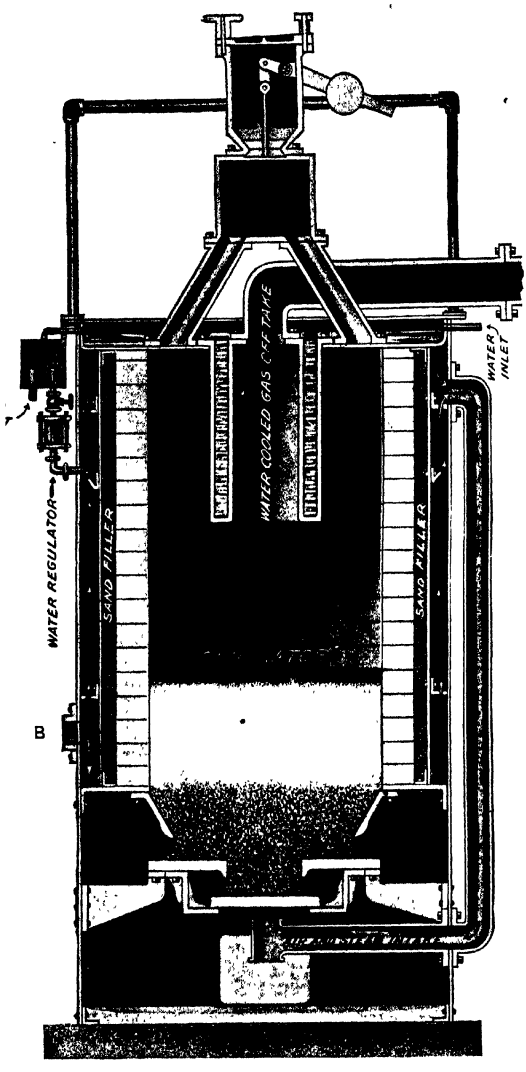

FIG. 160.—SHARP-BASSET SELF-VAPORIZING PRODUCER.

Fig. 161 shows a self steam-raising gas producer such as is supplied by the Syracuse Company of New York, U.S.A. It consists of an annular top vaporizer in combination with a vaporizing top plate and a water-cooled grate bosh.

The air enters at A, passes over the surface of the water at the top, becomes saturated with steam from the top (as well as from the annular tank type vaporizer B), and is conducted to the grate in the narrow annular space C, in which it becomes slightly preheated. Before entering the grate it sweeps over the top of the vaporizing tray or water-cooled grate bosh D. The latter is especially serviceable at starting-up periods, since if the water in the top vaporizers has been allowed to cool down, steam can be raised much quicker in the bosh D, due to its proximity to the incandescent zone.

This firm supplies with their producers the automatic water-supply regulator shown in fig. 162. The regulator has three pipe connections. Pipe B supplies the water and pipe A carries away any excess not admitted to the producer by the

regulator). Pipe C is connected to the gas inlet pipe to the engine (suction type), while pipe D is the water supply to the producer. Pipe C thus enables the pressure inside the regulator to vary in accordance with the load on the engine.

When the engine is idle the water stands at M, but when the engine is drawing gas it rises, due to the consequent diminution of pressure in the regulator, to some point O. The vertical water supply pipe being slotted from M upwards, the water admitted from the pipe will vary in accordance with the head in the stand pipe, and consequently in accordance with the load on the engine.

Fig. 163 shows a section through the Westinghouse gas producer, which serves as an example of how raising of the producer steam takes place in a double zone gas producer. A is the vaporizer which is placed at the junction of the two zones; it is partly heated by direct contact with the fuel and partly by the hot gas leaving the producer through the outlet pipes B. Steam is generated and added in independently adjustable quantities to the air entering the top and bottom of the gas producer.

Fig. 164 shows a section through the Crossley suction gas plant, the vaporizing means of which will serve as typical of those producers in which the steam is raised in vessels entirely separated from the gas producer proper. In such an apparatus the heat contained in the steam is entirely absorbed from the sensible heat contained in the hot crude producer gas.

FIG. 161.—SYRACUSE SELF-VAPORIZING PRODUCER.

A is the gas producer, B the tubular vaporizer (shown in fig. 165), and E the automatic water-feeding device.

The vaporizing tubes are of the gilled type suspended from a top plate, to which the water to be evaporated is fed through funnel and tube X. Each gilled tube J is arranged so that the water will flow through every one in series, with the exception of the last one, M, which is the vapour pipe proper, and which forms the

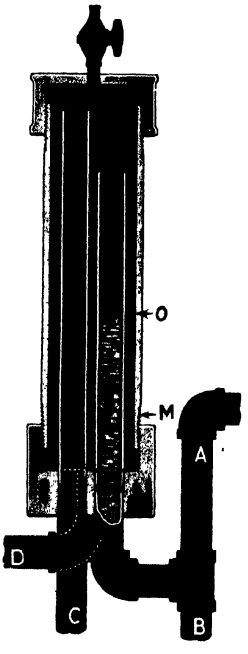

Fig. 162.—Syracuse Water Supply Regulator.

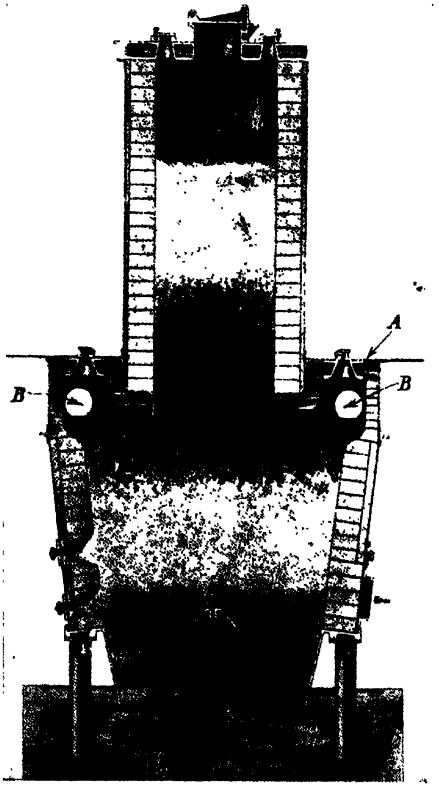

Fig. 163.—Westinghouse Double Zone Producer.

communication between the steam space N of the vaporizer and the steam distribution pipe O to the gas producer.

In other independent vaporizer designs the arrangement is similar to that of a smoke tube boiler with vertical tubes.

The heating surface to be provided for in self-vaporizing producers, to enable the necessary quantity of steam to be supplied at all loads, varies with the fuel used and the gas outlet temperature. The steam quantity to be used may vary

from $\frac{1}{5}$ to 1 lb. per lb. of dry fuel, depending upon its clinkering tendency, the quality of gas it is required to supply, and the load factor of the plant.

When using good fuels low in volatile matter content, say anthracite or coke, the designer will be well advised to base the heating surface on a maximum evaporation of 1 lb. of steam per lb. of fuel. For vaporizer surfaces, directly heated by the gas, this having an outlet temperature of about 650° to 700° C., it is safe to assume about ·2 to ·3 sq. ft. of heating surface per lb. of steam to be raised.

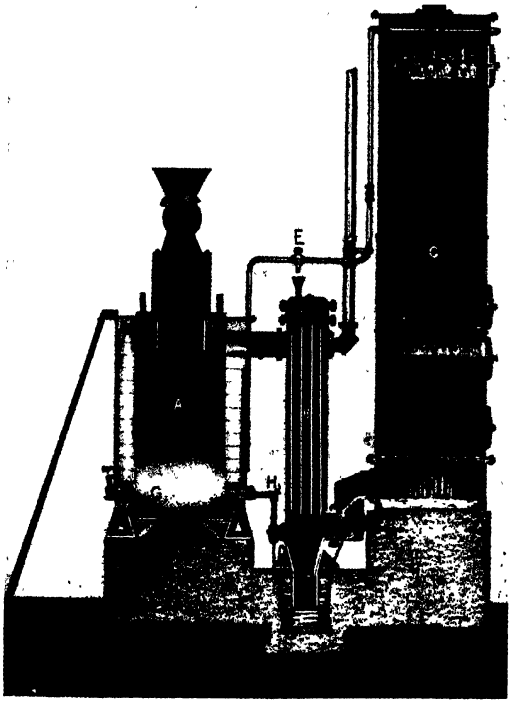

FIG. 164 —CROSSLEY SELF-VAPORIZING SUCTION GAS PLANT.

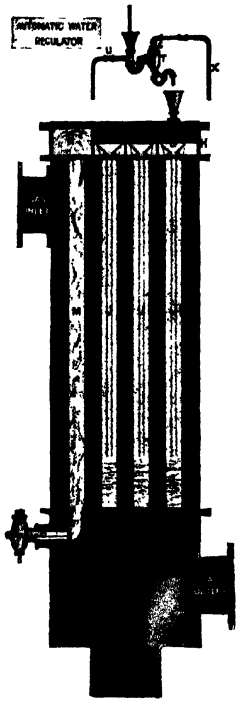

FIG 165.—CROSSLEY VAPORIZER FOR SUCTION GAS PLANT.

Since the total heat per lb. of water heated from 60° F. and converted into steam at 212° F. is 1120 B.T.U., the heat in this steam represents 8 per cent of the heat contained per lb. of anthracite, having a net heating value of 14,000 B.T.U. per lb. With a gas yield of 80 cub. ft. (N.T.P.) per lb. of anthracite (5 cub. m. per kg.) the hot gas would have to be cooled from 700° C. to about 350° C. to raise this steam, *i.e.* a 50 per cent evaporation efficiency, which is a good figure considering the comparatively low temperatures in question.

All vaporizers should be provided with blow-off cocks and be accessible for cleaning for scale or other impurities or sediments originating from the water;

while the water supply in any case should be as soft or as pure as can be obtained at a reasonable cost.

Air Saturators

By such we understand vessels in which the air current to be supplied to the producer is washed by hot water of such a temperature, and for such a length of time, as will enable the air to become saturated by water vapour at the desired temperature.

We may distinguish between air saturators using water (*a*) heated up by cooling the hot crude producer gas by direct washing, or (*b*) from any other source, say waste heat from furnaces, engine jacket water, water from exhaust boilers, etc. A third alternative (*c*) arises when it becomes possible to utilize the moisture in wet fuels to saturate the air blast.

In case (*a*) the water is generally dirty from impurities, such as tar, soot, and dust originating from the hot crude gas, for which reason the design of the air saturator should be such that cleaning can be easily carried out from time to time, or that the vessel is of the self-cleaning type.

Air saturators for using hot gas cooling water have been used for forty years or so on by-product producer gas plants (see pp. 280 and 405). The most modern design of washer used on these plants is the Lymn type of combined air saturator and gas cooler shown in fig. 166.

The detailed design of the internal parts of this washer is described in reference to fig. 279. The vessel shown in fig. 166 consists of two such washers superimposed upon one another. In the one, A, the hot gas is cooled, and in the other, B, the cold air is heated up and saturated with moisture, before being passed on to the gas producers. In the design shown the gas cooler is the upper one, although this arrangement is by no means always essential.

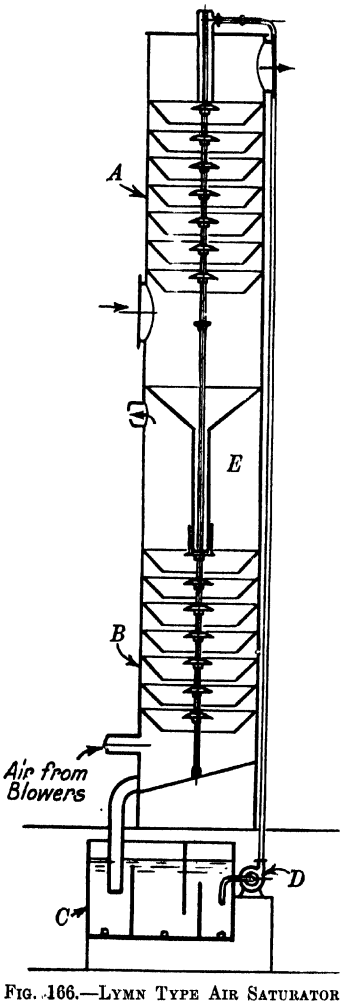

Fig. 166.—Lymn Type Air Saturator and Gas Cooler.

The water leaves at the bottom of the air saturator B in a cooled state, through a pipe luted in a steel tank C (or concrete water lute), wherefrom by means of pump D it is conveyed to the top of the gas cooler A; in passing down over the series of

cones and discs it is split up by the gas current flowing in the opposite direction; before leaving the gas compartment the water will have been heated up to a temperature approaching that of the entering gas (if this be at its saturation temperature). Having thus been heated up, the water passes through an internal water seal E into the air saturator B, in passing down the series of cones and discs of which it is re-cooled to a temperature corresponding to the amount of water vapour evaporated from it. Any tar and dirt washed out from the gas will be deposited in the tank C and not inside the washer, due to the particular shape of the internal baffles. It will be clear that the heat losses from a combined apparatus such as this are very much less than if two independent washing towers and water-circulating systems were used, quite apart from the fact that the latter arrangement will require more power, supervision, and first capital outlay.

The downcoming water sheet scours away from the cones and discs any deposits from the gas. The rate at which the water passes through the internal water lute E is so great that no dirt particles are given the opportunity of settling out. The internal water lute shown has been designed for a plant in which the air blast has a higher pressure than that of the gas. Although this pressure difference between the two gases will fluctuate with the load factor, the water level in the luted internal supply pipe will rise and fall automatically without having practically any influence upon the rate of water flowing through the lute.

A heat cycle such as that existing in a combined air saturator and gas cooler is of a simple kind, the water quantity flowing per unit of time serving as the heat-carrying agent. Care should be taken, however, that a sufficiently large quantity of water is being maintained in circulation. A circulation rate corresponding to a temperature range for the water of 15° C. is quite a satisfactory figure when raising in such an air saturator between $\frac{3}{4}$ and 1 kg. of steam per kg. of coal gasified.

On this basis the water to be circulated per kg. of coal gasified when raising 0·8 kg. of steam can be arrived at as follows :—

Assume water evaporated at 70° C. and make up water supplied at 15° C., then heat per kg. of steam . .	$=627-15$	$=612$ cals.
Or per 0·8 kg. of steam		$=490$ cals.
Assume further 2·5 cub. m. of air are to be supplied per kg. of coal gasified, the air being heated from 15° C. to 70° C., then the heat required	$=2{\cdot}5\times55\times0{\cdot}295=$	40 cals.
	Total . .	530 cals.

With a temperature range for the water of 15° C:

$$\textit{Water in circulation}=\frac{530}{15}=35{\cdot}3 \text{ kg./kg. of coal gasified,}$$

or $3\frac{1}{2}$ galls. per lb. of coal gasified.

Before deciding whether an air saturator of this type should be installed it is also necessary to satisfy oneself that the gas (1) contains more heat than that it is desired to recover in the air saturator, and (2) has a temperature (when saturated) 5° to 10° C. higher than that of the saturated air leaving.

Even under very fluctuating load conditions it will be found that the saturation temperature of the air blast (and hence the gas composition) does not vary considerably, which is due to the fact that the heat is stored in the hot water at a reasonably low temperature, and the fact that the air cannot become saturated with steam at a higher temperature than that of the water.

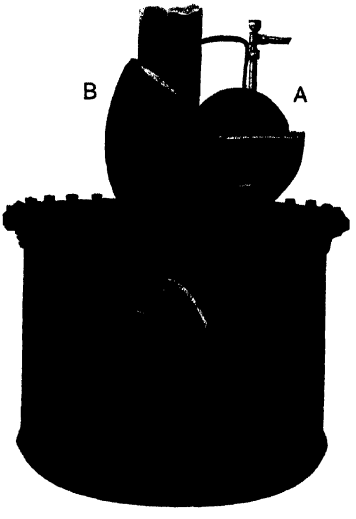

FIG. 167.—SMITH TYPE EXHAUST GAS-HEATED FLASH AIR SATURATOR.

Air saturators making use of the heat contained in hot water have already been referred to in connection with the utilization of the hot waste water from water-jacketed gas producers (p. 248), but obviously hot water from any other source may be utilized. As an example of air saturators, or vaporizers of this type, two systems used by the Smith Gas Engineering Co., Ohio, U.S.A., will be described.

Fig. 167 shows a "flash" boiler vaporizer heated by the exhaust gases from the gas engine. Water is delivered to the centre of the cylindrical water regulator A, which is accurately balanced on knife edges and free to rotate on its axis. In the short curved pipe B leading to the centre of the heater (through which passes all the air supplied to the producer) is suspended a disc, nearly filling the opening, and connected by a lever to the regulator. The air entering the pipe exerts pressure on the disc, varying according to the amount passing, and tends to change the position of the disc in the pipe. The disc, through the

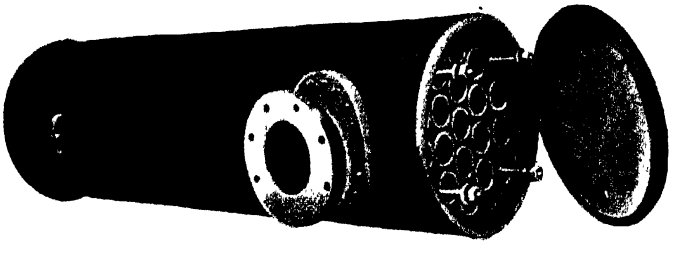

FIG. 168.—SMITH TYPE EXHAUST GAS BOILER.

lever, tilts the water regulator to a greater or less degree, allowing more or less water to enter the boiler. The water on entering the boiler is immediately vaporized and taken up by the air on its way to the producer.

On larger gas producers (above 75 B.H.P.) this firm uses two apparatus to

accomplish the same object, viz., a water heater, fig. 168, heated by the gas engine exhaust gases, and an air saturating vessel, fig. 169, attached to the gas producer.

The water heater has the shape of a multitubular boiler in which the water for air saturation is heated up to the required temperature before being admitted through pipe L to the air saturator B.

This vessel, which is cylindrical in shape, contains an internal vertical division plate M, whereby it is separated into two compartments of unequal size, the larger

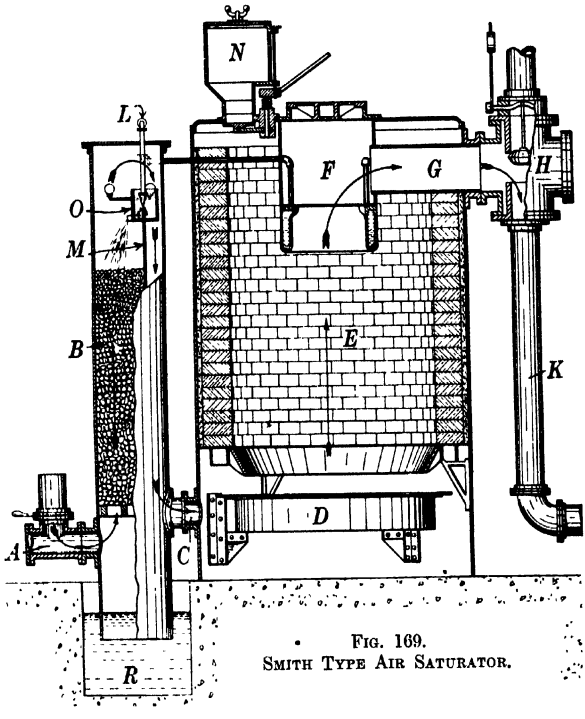

FIG. 169.
SMITH TYPE AIR SATURATOR.

one, being filled with coke or pebbles, is the air saturator proper, while the smaller one forms a down-take duct for the saturated air to the gas producer.

At the upper end of the division plate is fixed a water-distributing device C which is controlled by a thermostat to admit a certain amount of hot water from the exhaust heater into the air-saturating compartment.

The thermostat is controlled by the temperature of the saturated air current any alteration in the saturation temperature of the air, due, say, to load fluctuation will have a quick effect upon the thermostat, which automatically causes more or the hot water to be admitted to or cut off from the air-saturating compartment as the case may be, thus enabling the saturation temperature to be constantly maintained.

Although the method described overcomes in a satisfactory way the matter of maintaining a constant air blast temperature, some engineers would be anxious lest corrosion should be set up in the water heater, due to a possible condensation of the sulphurous components of the products of combustion. Furthermore, all the heat in the water will probably not be abstracted in the saturator, so that in addition to the amount of hot water run to waste for regulating purposes, there will be an additional thermal loss in the spent air-saturation water.

It might perhaps, therefore, in some cases be preferable to generate steam under pressure in an exhaust boiler (about 2 to 3 lbs. per brake-horse-power hour are regularly obtained in this way), which steam may be used for many other works purposes. The gas producer can obtain its steam supply from its own waste heat (if any), or from *part* of the live steam generated in the exhaust boiler, or steam exhausted from plant worked by live steam from the exhaust gas boiler. In either case, whether live or exhaust steam is used for mixing with the air blast, the amount added can be automatically controlled by a thermostat device similar to that used in the Smith plant, except that it will control a steam valve instead of a water valve.

Before leaving the subject proper of self steam-raising producer plants, a few *generalizations* applying to plants yielding cold gas may be drawn :—

(1) Whenever the producer gas, as it leaves the top layers of the fuel, contains a large amount of heat, whether sensible (due to high temperature) or latent (due to high moisture content), self steam-raising devices will be found to save at least 5 to 10 per cent of the over-all fuel consumption.

(2) For fuels having a low content of volatile matter, say coke or anthracite, the vaporizers may be of most varying shapes and heated *directly* by the hot gases, and in certain cases also by contact with the hot fuel.

(3) When the heat in the crude producer gas is due to a high moisture content, and when the fuel in use contains tar, soot, or dirt, the raising of the steam is best done in the *indirect* way by cooling the gas with water and washing the air for the producer with the water thus made hot.

In plants where the fuel, such as, say, peat, brown coal, etc., is dried somewhat previous to its introduction into the producer, it may be found of advantage to utilize the air for the producer as the drying medium.

One such case is described in reference to fig. 298, from which it will be seen that the air blast, after being heated up to a reasonably high temperature, is passed through the crude fuel, whereby its (the air blast) sensible heat is converted into latent heat in the shape of absorbed moisture.

Another method of raising steam for the gas producer plant is to pass the air through an air heater (say in furnace flues), and then spray water into the hot air or wash the hot air with water in an air-saturating apparatus. Such a method is really the reverse way of the air-saturation methods described above, in so far as the air is hotter than the water when the two are brought into contact.

Air Blast Saturation Temperature

When wet live or exhaust steam and air are mixed together, the air will be heated up to that temperature at which the two components are in equilibrium with one another, the so-called "dew point," or saturation temperature.

If such a mixture is allowed to be cooled some of the steam will be condensed out, until the heat abstracted by cooling has been supplied by the heat in the steam condensed, the mixture attaining such a lower temperature as enables the air to be saturated (in equilibrium) with the steam or water vapour.

If on the other hand a saturated air and steam mixture is heated to a higher temperature, without adding steam, the mixture will behave in a physical respect as a mixture of permanent gases; such a condition exists when the blast is "superheated."

To a given relative proportion of air and steam in a mixture there will correspond only one definite saturation temperature or dew point, viz. the temperature which corresponds to the particular vapour tension of saturated steam.

For example, at 45° C. the absolute pressure of saturated steam is 71·4 mm. mercury, or 0·094 atm. (about 1·4 lbs. per sq. in.). Consequently in a saturated air (or any other gas) and steam mixture, at normal pressure (760 mm. mercury), and at 45° C., the partial pressure of the steam = 71·4 mm. Hg, while the partial pressure of the air = 688·6 mm. Hg. Total = 760 mm. Hg.

Since the weight of 1 cub. m. of steam at 45° C. equals 65 grammes, this quantity of steam will be contained in 1 cub. m. of air and steam mixture at 45° C.

The quantity of steam required per cub. m. of air at N.T.P. (0° C. and 760 mm. Hg), the figure which the gas producer engineer requires, may be calculated from the above as follows :—

$$65 \times \frac{760}{688{\cdot}6} \times \frac{273+45}{273} = 83{\cdot}5 \text{ grammes.}$$

A very useful table covering data regarding saturated mixtures of gases with steam was published by Mr. H. A. Humphrey in 1901.[1] The same is reproduced in Table 67. It will be found a most handy reference, and as the slight corrections that have since been made in the specific weights of steam under low pressure are of no practical importance the table is reproduced in its original state.

The common basis for all figures is 1 cub. m. of *dry* gas (or air) at a temperature of 0° C. and an absolute pressure of 760 mm. mercury (N.T.P.).

Fig. 170 shows a series of curves embodying the results given in Table 67. Here the temperature of the mixture is plotted as ordinate, while the weight of water vapour per cub. m. dry gas and the total volume of the mixture are plotted as abscissae. To show the effect of varying pressures (such as may exist in practice) upon the steam quantity in the saturated mixture, two extra curves have been drawn, one for 820 mm. pressure and one for 700 mm. pressure.

[1] H. A. Humphrey, "Power Gas and Large Gas Engines for Central Stations," *Proc. Int. Mech Eng.*, 1900.

TABLE 67.

GASES SATURATED WITH WATER VAPOUR AT 760 MM. PRESSURE AND AT TEMPERATURES FROM 0° TO 99° C.

Temp. t° C.	Partial Pressure of Water Vapour in mm. of Mercury.	Grammes of Water Vapour absorbed by one cub. metre of Dry Gas at 0° C. when saturated at t° C. and 760 mm.	"Partial Volumes" of Dry Gas and Water Vapour in a Saturated Mixture at t° C. and 760 mm.		Total Volume of Gas and Water Vapour resulting from saturating one cub. metre of Dry Gas at 0° and 760 mm. to t° C.
			Dry Gas per cent.	Water Vapour per cent.	
0	4·569	4·866	99·40	0·60	1·0060
1	4·909	5·231	99·36	0·64	1·0107
2	5·272	5·620	99·31	0·69	1·0144
3	5·658	6·035	99·26	0·74	1·0191
4	6·069	6·477	99·20	0·80	1·0228
5	6·507	6·948	99·14	0·86	1·0275
6	6·971	7·448	99·08	0·92	1·0312
7	7·466	7·983	99·02	0·98	1·0359
8	7·991	8·550	98·95	1·05	1·0407
9	8·548	9·153	98·88	1·12	1·0444
10	9·140	9·794	98·80	1·20	1·0491
11	9·767	10·47	98·71	1·29	1·0539
12	10·432	11·20	98·63	1·37	1·0587
13	11·137	11·97	98·53	1·47	1·0634
14	11·884	12·78	98·44	1·56	1·0682
15	12·674	13·64	98·33	1·67	1·0730
16	13·510	14·56	98·22	1·78	1·0778
17	14·395	15·53	98·11	1·89	1·0826
18	15·330	16·56	97·98	2·02	1·0884
19	16·319	17·66	97·85	2·15	1·0933
20	17·363	18·81	97·72	2·28	1·0981
21	18·466	20·04	97·57	2·43	1·1040
22	19·630	21·33	97·42	2·58	1·1099
23	20·858	22·70	97·26	2·74	1·1148
24	22·152	24·16	97·09	2·91	1·1207
25	23·517	25·69	96·91	3·09	1·1267
26	24·956	27·32	96·72	3·28	1·1327
27	26·470	29·03	96·52	3·48	1·1387
28	28·065	30·85	96·31	3·69	1·1447
29	29·744	32·77	96·09	3·91	1·1518
30	31·510	34·80	95·85	4·15	1·1578
31	33·366	36·95	95·61	4·39	1·1650
32	35·318	39·21	95·35	4·65	1·1722
33	37·369	41·61	95·08	4·92	1·1794
34	39·523	44·14	94·80	5·20	1·1866
35	41·784	46·81	94·50	5·50	1·1939
36	44·158	49·63	94·19	5·81	1·2023
37	46·648	52·61	93·86	6·14	1·2096
38	49·259	55·76	93·52	6·48	1·2181
39	51·996	59·09	93·16	6·84	1·2266
40	54·865	62·60	92·78	7·22	1·2363
41	57·870	66·32	92·39	7·61	1·2448
42	61·017	70·24	91·97	8·03	1·2545
43	64·310	74·38	91·54	8·46	1·2643
44	67·757	78·75	91·08	8·92	1·2753
45	71·362	83·38	90·61	9·39	1·2863

TABLE 67—*continued*

Temp. t° C.	Water Vapour.		Relative Volumes.		Total Volume.
	Tension mm.	Grammes.	Dry Gas per cent.	Water Vapour per cent.	Gas and Water Vapour.
46	75·131	88·26	90·11	9·89	1·2974
47	79·071	93·43	89·60	10·40	1·3085
48	83·188	98·89	89·05	10·95	1·3208
49	87·488	104·67	88·49	11·51	1·3332
50	91·978	110·78	87·90	12·10	1·3468
51	96·664	117·25	87·28	12·72	1·3605
52	101·554	124·10	86·64	13·36	1·3742
53	106·655	131·35	85·97	14·03	1·3892
54	111·973	139·03	85·27	14·73	1·4054
55	117·516	147·17	84·54	15·46	1·4218
56	123·292	155·80	83·78	16·22	1·4394
57	129·310	164·97	82·99	17·01	1·4571
58	135·575	174·70	82·16	17·84	1·4761
59	142·097	185·03	81·30	18·70	1·4963
60	148·885	196·02	80·41	19·59	1·5179
61	155·946	207·72	79·48	20·52	1·5396
62	163·289	220·18	78·51	21·49	1·5639
63	170·924	233·46	77·51	22·49	1·5883
64	178·858	247·63	76·47	23·53	1·6152
65	187·103	262·77	75·38	24·62	1·6436
66	195·666	278·97	74·25	25·75	1·6733
67	204·559	296·32	73·08	26·92	1·7044
68	213·790	314·92	71·87	28·13	1·7381
69	223·369	334·91	70·61	29·39	1·7746
70	233·308	356·41	69·30	30·70	1·8137
71	243·616	379·59	67·95	32·05	1·8556
72	254·305	404·62	66·54	33·46	1·9002
73	265·385	431·71	65·08	34·92	1·9488
74	276·868	461·09	63·57	36·43	2·0002
75	288·764	493·04	62·00	38·00	2·0570
76	301·086	527·88	60·38	39·62	2·1179
77	313·846	565·99	58·70	41·30	2·1843
78	327·055	607·81	56·97	43·03	2·2574
79	340·726	653·86	55·17	44·83	2·3386
80	354·873	704·79	53·31	46·69	2·4268
81	369·508	761·36	51·38	48·62	2·5245
82	384·643	824·50	49·39	50·61	2·6344
83	400·293	895·38	47·33	52·67	2·7566
84	416·472	975·45	45·20	54·80	2·8939
85	433·194	1,066·5	43·00	57·00	3·0516
86	450·473	1,171·0	40·73	59·27	3·2298
87	468·324	1,291·9	38·38	61·62	3·4381
88	486·764	1,433·4	35·95	64·05	3·6792
89	505·806	1,601·0	33·45	66·55	3·9666
90	525·468	1,802·7	30·86	69·14	4·3102
91	545·765	2,049·7	28·19	71·81	4·7329
92	566·715	2,359·1	25·43	74·57	5·2596
93	588·335	2,757·5	22·59	77·41	5·9393
94	610·643	3,289·6	19·65	80·35	6·8433
95	633·657	4,035·4	16·62	83·38	8·1121
96	657·396	5,155·2	13·50	86·50	10·017
97	681·879	7,022·9	10·28	89·72	13·192
98	707·127	10,760·7	6·96	93·04	19·544
99	733·160	21,978·4	3·53	96·47	38·604
100	760·000				

The effect of total pressures differing from the normal standard, viz. 760 mm. Hg upon the figures given in the table, is that the "ratio" between the steam and gas quantities in a unit volume alters. At a given temperature the partial pressure of water vapour in a saturated mixture is constant whatever be the total pressure. Thus at 45° C. the partial pressure of water = 71·4 mm. Hg.

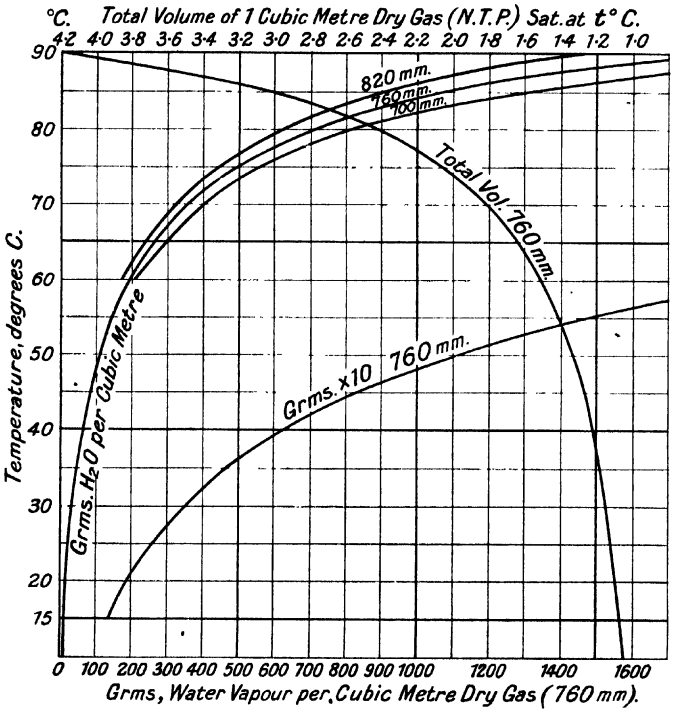

FIG. 170.—CURVES REGARDING SATURATED MIXTURES OF GASES AND STEAM.

For a mixture having a total pressure of :

(1) 760 mm. Hg the partial pressure of the air = 688·6 mm. Hg.
(2) 700 ,, ,, ,, = 628·6 ,,
(3) 820 ,, ,, ,, = 748·6 ,,

In other words, at a constant temperature the ratio of steam to air varies inversely with the total pressure of the mixture.

From the above remarks it should be plain that if in practice we know the temperature of the saturated air and steam blast mixture, then we are able to say definitely what weight of steam is being added per unit volume of air. The operator will soon find out at which blast temperature there are the least difficulties encountered

in the gasification of a given coal, and will therefore endeavour to maintain this temperature constantly.

All that is needed to control the operation in this respect is the provision of a thermometer in the air blast pipe, by means of which it is at once indicated whether more steam is to be added or cut off from the air main. Such a thermometer should be placed in an accessible place and at a point of the air blast pipe where proper intermixing of air and steam has taken place. In some cases the temperature may be automatically controlled by a thermostat, in which case it is generally advisable to add a thermometer as a check control.

There are a few exceptional cases met with in practice where the blast temperature indicated by a thermometer does not represent the actual saturation temperature, such cases being practically always due to a super-heating of the air blast. This may be due to passing the steam and air through a hot jacket or to an insufficient supply of water to a "flash" boiler, etc.; in other words, due to the particular producer or steam-raising means employed, and as such cannot be avoided unless the design is modified.

Another cause is also possible, viz. where super-heated steam is added to the air, or where dry high-pressure steam is "wire-drawn" through the control valve and thereby becomes super-heated; in either case the sensible heat, or "super-heat," of the steam may be of such a magnitude as to heat the air to a higher temperature than the saturation temperature. Where such conditions might prevail it is advisable to modify the steam supply means so that wet steam is supplied to absorb the "super-heat." A control test of steam content in air blast is easily carried out by passing a quantity of the air blast slowly through sulphuric acid and measuring the remaining air volume (see p. 469).

Note.—Whether the future will bring us an indicator whereby we can read off the moisture content of the air, whether super-heated or not, in a similar way to the CO_2 flue gas indicators, is still an open question. Such an apparatus would, however, be of extreme advantage in connection with large by-product recovery plants.

The most common experience in practice is, however, that the air blast is "wet," that is, contains entrained moisture, originating not only from the moisture content in the steam before admixture, but also from the expansion of the steam flowing through the nozzles of steam jet blowers, valve openings, etc. Although the expansion of steam is not purely an adiabatic one, some steam is nearly always condensed in practice, thus making it necessary to supply a larger steam quantity than is actually present as vapour in the air blast passed into the fuel.

Means for supplying Mixtures of Endothermal Agents with Air to Gas Producers

In the foregoing we have only dealt with plants in which steam was the only endothermal agent added to the air for the producer. Apart from the ease of control attached to plants using steam as the only endothermal agent, and apart

from the fact that the use of ordinary products of combustion in the air blast is generally not economical (p. 24) when a cold gas of a high calorific value is to be manufactured, there are certain gas producer plants operating on a commercial scale in which a quantity of products of combustion is added directly to the air blast entering the gas producer.

More than thirty years ago Dr. L. Mond was granted a patent for raising the steam required in a gas producer by washing the products of combustion from a gas engine with cold water, thus cooling down and saturating the burnt gases with water vapour, the whole or part of these moist products being introduced with air into the gas producer, either alone or mixed with extra steam. There are gas producer plants at work in England to-day in which such a system is employed with commercial success.

Fig. 171 shows the Galusha type of steam-raising device built by the Gas Producer and Engineering Corporation, New York, U.S.A. In this apparatus water is sprayed directly into the gas engine exhaust and the mixture taken to the producer. J is the exhaust pipe from the gas engine; D a water jacket round the same, in which

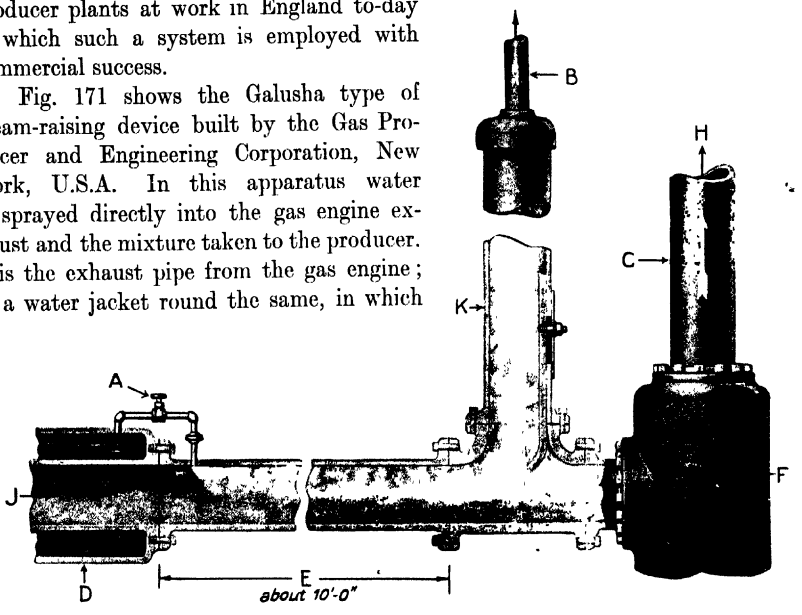

Fig. 171.—Galusha Steam Raiser.

the water to be evaporated is pre-heated before being admitted to the exhaust pipe E through the regulating cock A. As the water comes into contact with the hot exhaust gases some of it is flashed into steam, which is removed into the steam dome K, while the exhaust gases enter the silencer F and leave for the atmosphere through the pipe C. The "steam" for the gas producer leaves through an insulated pipe B, while its admission to the producer is controlled by a separate valve.

Any "steam" supplied in this way must contain exhaust gases such as nitrogen, oxygen, and CO_2. It is difficult to say in what proportion these gases would exist to the steam, but it would appear unlikely that a very distinct separation of steam and exhaust gases will take place in pipe E.

When the gas is used for operating gas engines where the lower calorific value of the gas does not seriously affect the working efficiency, it would appear that such an arrangement should work satisfactorily so long as a sufficiently large amount of the vaporized steam can be removed into the dome K; obviously the necessity for expenditure for raising steam for the gas producer is eliminated.

In Germany some large gas producers for furnace use have obtained their steam supply by passing part of the furnace flue gases through a baffle washer charged with water spray, the sensible heat of the burnt gases being utilized to raise steam in a direct way. Unless the flue gases have a very high temperature, the extra quantity of nitrogen in the air blast due to the flue gases will tend to make a producer gas of lower flame temperature; generally speaking, better furnace results would probably be obtained if the waste heat of the flue gases were used to raise steam in an indirect way, say by a waste heat boiler or economizer, or pre-

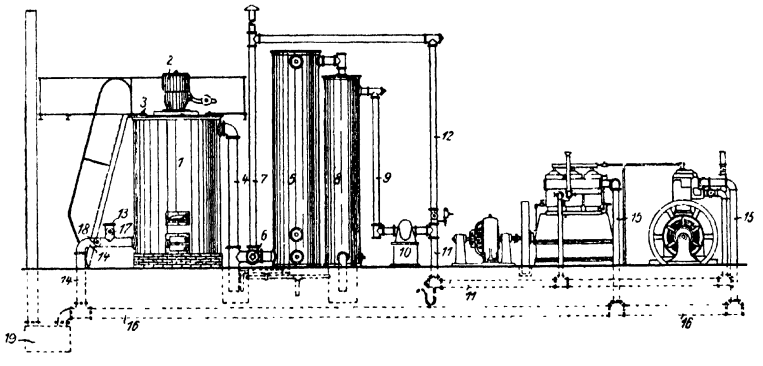

FIG. 172.—TAIT'S GAS PRODUCER USING EXHAUST GASES.

heating air in an air heater and letting the hot air raise its own steam by washing with water in an air saturator.

Fig. 172 shows a general arrangement of a gas producer and engine on the Tait system, such as was recently described by Gwosdz.[1] This type of plant, which was first put forward by Godfrey M. S. Tait, of Washington, D.C., U.S.A., is specially characterized by part of the exhaust gas from the engine being added to the air entering the producer.

1 is the gas producer, 5 and 8 gas-cooling plant, and 10 the exhauster, which causes the producer to be worked under suction and the gas to be delivered under pressure to the gas engines by means of pipe 11. The exhaust from the gas engines is passed through branches 15 and main pipe 16 to the silencer 19, a branch 14 to convey part of the exhaust gases to the producer being provided. Air is sucked in through branch 13, and valves 17 and 18 are provided to control independently the relative quantities of air and exhaust gases respectively.

[1] Dr. Eng. Gwosdz, *Feuerungstechnik*, February 1, 1921.

With an air and gas mixture containing 3·3 per cent CO_2, 18·9 per cent O_2, and 0·1 per cent CO, the gas produced had the following analysis :—

CO_2	1·8 per cent.
O_2	1·2 ,,
CO	26·2 ,,
H_2	0·4 ,,
CH_4	0·7 ,,
N_2	69·7 ,,
Total combustible gases	27·3 ,,

Although the engine would be likely to work satisfactorily with a gas containing such a small and probably regular quantity of hydrogen, this analysis clearly confirms that the theoretical considerations made on p. 24 regarding the addition of products of combustion to the air passed into the fuel bed causes a reduction of the gas-heating value, which in case the cold gas were used for heating purposes would be a most uneconomical procedure.

According to a personal communication from Mr. Tait to the author, it has been found of advantage in some of these plants to add steam to the air in addition to the products of combustion, to keep a proper check upon the clinker formation from fuels with a fusible ash.

In semi-gas producers, for instance, such as are used in gas works for heating the retorts, hot products of combustion have been injected into the grates to ensure a saving in steam consumption, plants of this type having been put to work both in U.S.A. and Germany.

A theoretical dissertation has been made by Hudler,[1] who comes to the following conclusions concerning the use of this system in semi-gas-fired gas works retorts :—

"The economical advantages which can be achieved by the admission of products of combustion to the grate are not caused by the chemical properties of the burnt gases (*i.e.* its CO_2 content), but only by their content of sensible heat. A good gain should be obtainable if the *hot* gaseous products are *directly* admitted to the fire, while if they are cooled previously the method becomes uneconomical."

Speaking generally, it would appear that if the products have a temperature below 300 to 400° C. no great operation economy is likely to be obtained; moreover, with very hot gases the tendency of the fuel to clinker may become excessive.

An interesting system for raising steam for use in gas producers is being supplied by the German firm of Bender & Fraembs. It consists of an evaporator inside which a fraction of the crude producer gas is *burnt*, the products of combustion thus coming in *direct* contact with the water to be evaporated. The resulting superheated mixture of products of combustion and steam is added to the air blast and mixed with this previous to introduction into the producer.

[1] D. J. Hudler, *Gas u. Wasserfach*, p. 475, 1921.

Figs. 173-175 show various views of a two-producer plant fitted with this system.

1 designates the producers connected by pipes 3 to the common gas culvert 2. The vaporizer consists of combustion chamber 5, evaporating chamber 6, both lined with firebrick, to which is connected the water supply tank 9, motor-driven fan 8, and pipe 10 to producer. A small amount of the crude producer gas is removed from the culvert at 11 by uptake pipe 12 (with control valve 13) and burnt by burner 14 at the base of the combustion chamber 5. When completely burnt the products of combustion enter the vaporizer chamber 6 through opening 15; these hot products of combustion are brought into immediate contact with a sheet of water flowing down the reversing cascade series of cast-iron plates 16. The water level in tank 9 is maintained constant, hence by adjusting valve 18 the water flowing through funnel 17 can be definitely controlled.

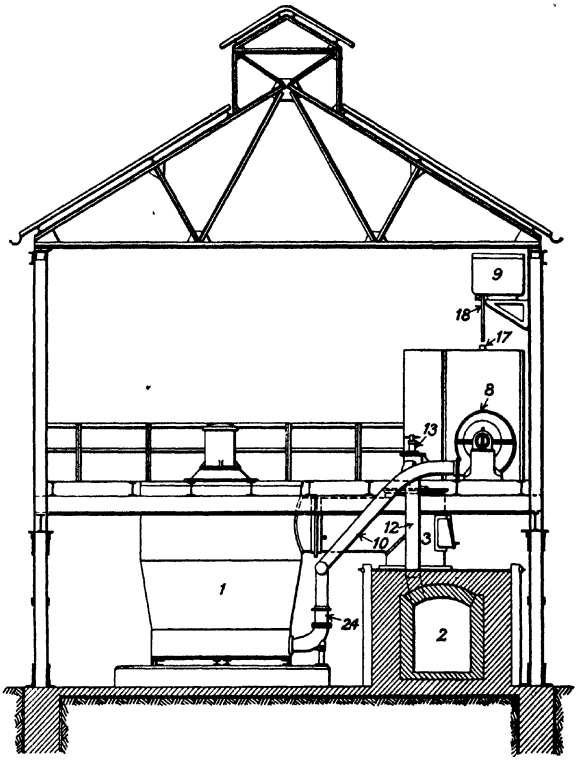

FIG. 173.—BENDER & FRAEMBS' DIRECT VAPORIZER PLANT (SIDE ELEVATION).

The water is quickly evaporated, the mixture of products of combustion and steam being removed from the vaporizer at a temperature of 300°-400° C. through branch 19. Before entering the fan, air is added from tee 20, provided with regulating slide 21, the fan thus distributing the air blast mixture to the two producers by pipe branches 10, each being provided with its own regulating slide 23 and non-return valve 24. To avoid radiation and condensation losses all air blast pipes are insulated.

It is stated that by this method 0·135 to 0·250 kg. of water is vaporized per kg. of black coal gasified, and 0·06 to 0·13 kg. per kg. of brown coal, depending upon the operating conditions and the ash fusibility of the fuel. The power

consumption for a producer gasifying 10 tons of coal per twenty-four hours is 3 to 4 B.H.P. when the blast is provided at a pressure of 4″ W.G.

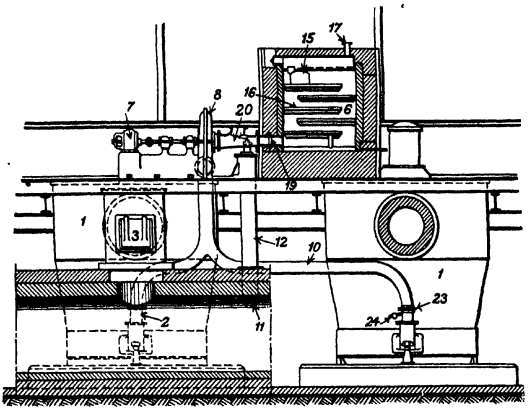

FIG. 174.—BENDER & FRAEMBS' DIRECT VAPORIZER PLANT (SECTIONAL ELEVATION).

Subject to the wear of the cascade plates not being excessive, a system like this would seem, under reasonably regular load conditions, to have certain advantages, viz.—

(1) Saving in over-all fuel bill.
(2) Independence of separately fired boiler plant with its inherent thermal losses.
(3) The avoidance of condensation of steam, such as is usual in steam jet blowers.

The steam consumption of $\frac{1}{4}$ lb. per lb. of coal mentioned above would probably be low for fuels with highly fusible ashes, but assuming this consumption as a basis we may make the following calculations :—

Under the assumption hot producer gas as per case 1 in Table 25, p. 68, is being made, and that 70 per cent of the "cold" heating value of this gas (1476·5 cals. per cub. m.) is utilized for raising 0·25 kg. of steam to 350° C. (the temperature of the outgoing gases), then we require—

$$\frac{0{\cdot}250 \times \overset{\text{(steam)}}{747}}{1476{\cdot}5} \times \frac{100}{70}$$

$= 0{\cdot}181$ cub. m. gas per kg. coal gasified.

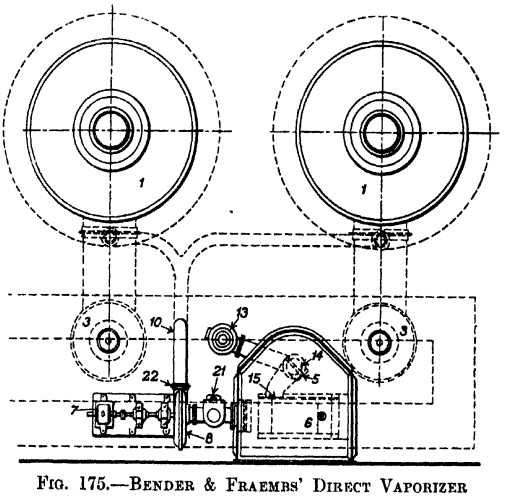

FIG. 175.—BENDER & FRAEMBS' DIRECT VAPORIZER PLANT (PLAN VIEW).

If 1 kg. of coal yields 3·5 cub. m. of gas in the producer, 5·2 per cent of the gas generated will have to be used for this purpose.

Similarly we may calculate the steam content in the mixture leaving (assuming the conditions of combustion as per p. 517) as follows :—

By combustion of 1 cub. m. of gas we obtain 2·13 cub. m. of total products of combustion containing ·216 cub. m. (10 per cent) H_2O.

For each kg. coal gasified we vaporize 0·25 kg. water having a volume (N.T.P.)	= ·42 cub. m.
" " " we require 0·181 cub. m. gas giving products . .	= ·385 cub. m.
Total products	= ·805 cub. m.

Steam content in products	= ·039 cub. m.
" " from water	= ·42 "
Total steam . .	= ·459 cub. m.

I.e. per cent steam in products	= 57 per cent.
Corresponding saturation temperature of products	= 85° C.

The total amount of endothermal agents in the mixture is as follows :—

Products of combustion from 1 cub. m. gas contain ·327 cub. m. CO_2.
" " " 0·181 " " ·059 " "

CO_2 in mixture	= 7·3 per cent.
Total per cent of $H_2O + CO_2$ . . .	= 64·3 "

The above rough calculation would seem to prove that the admixture of a endothermal agent so rich in steam with the air blast should not have any seriou influence upon the gasification results.

(*I*) PRODUCERS WITH BY-PRODUCT RECOVERY

From pages 78 to 114 we have seen that the by-products to be recovered fron producer gas are mainly ammonia and tar.

During the thirty years following Dr. L. Mond establishing in Winnington Cheshire, on a successful commercial scale his process for recovering ammonia i bituminous coal gas producers, ammonia was usually looked upon as the onl by-product worth recovering from a fuel; indeed, in many producer designs of te to fifteen years ago various means of destroying the tar evolved from volatile fuel formed the subject of patent applications.

Due to the shortage of oils, lubricants, etc., under which the Central Europea Powers suffered during the war period, various devices were then evolved, part cularly in Germany, with the object of increasing the amount of and conservin the tar oils evolved from the fuel during gasification. The ammonia yield from th fuel was, however, in most cases considered of secondary or insignificant importanc

We shall therefore in this chapter concern ourselves with—

1. Producers designed mainly with the object of yielding ammonia.
2. Producers designed mainly with the object of yielding tar oils.

While producers designed for ammonia production always will produce tar, tl reverse cannot be said of producers designed for tar recovery.

1. Ammonia Recovery Gas Producers

In 1883 Young & G. Beilby, in a paper read before the Society of Chemical Industry, claimed that when using bituminous coal in an externally heated retort (similar to those employed in the Scotch shale industry) having a coke gas producer at the base, the gas obtained was of the following composition :—

CO_2	16·6	per cent,
CO	8·1	,,
CH_4	2·3	,,
H_2	28·6	,,
N_2	44·4	,,

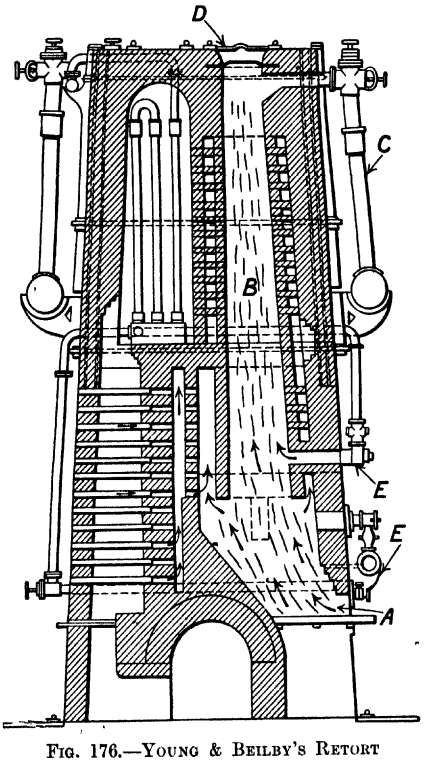

Fig. 176.—Young & Beilby's Retort Generator.

and that 60 to 70 per cent of the nitrogen in the fuel was recovered as ammonia.

Their plant does not, however, seem to have found extensive use, due probably to the expensive retorts involved. As a matter of historical interest their retort generator design is shown in fig. 176.

A is the gas producer fed with coke from the superimposed retort B, and used for heating these both internally and externally. Steam and air entered at two places E, while the gases were removed at the top to a gas-collecting main C. Coal was supplied at D.

Dr. Ludwig Mond's first gas producer plant was built in 1883–1885; [1] it is shown in fig. 177. As evidence of the chemical engineering ability and enterprise of Dr. Mond it need only be mentioned that the *first* plant built was *not* a test plant, but one having a gasification capacity of no less than 200 tons of bituminous coal per twenty-four hours.

The gas producers were of the iron-bound brick type, rectangular in shape, 6 ft. wide by 12 ft. long, each producer being provided with two transverse walls A dividing the upper part into three chambers. In the two outer chambers coal was charged from separate hoppers, while the inner chamber served to take off the gas from below the top surface of the freshly introduced fuel.

[1] L. Mond, Presidential Address, S.C.I., July 10, 1889.

An air and steam blast of about 80° C. saturation temperature and 4″ pressure

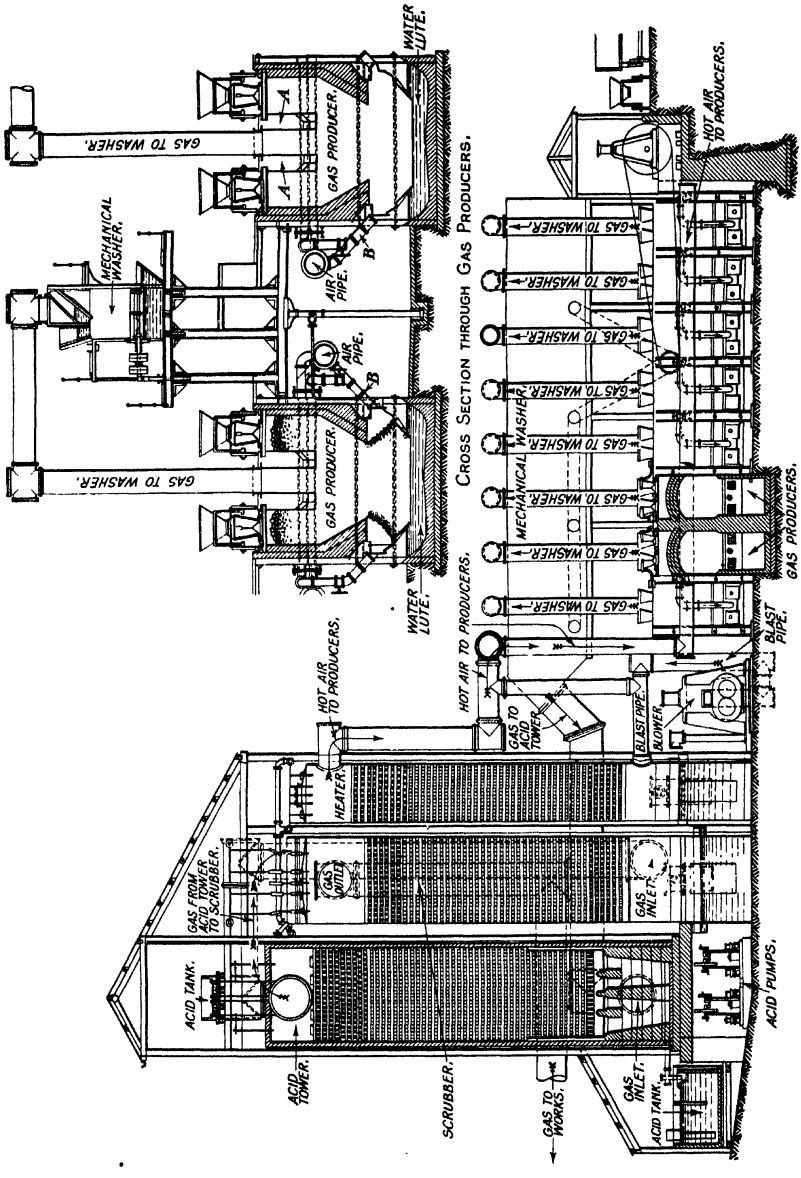

FIG. 177.—L. MOND'S FIRST BY-PRODUCT GAS PRODUCER PLANT.

was introduced on opposite sides of the producer, the flow of gases through the fuel bed thus being upwards from the edges towards the centre.

The fuel used was slack containing 33·5 per cent volatile matter and moisture, and 11·5 per cent ash.

The thermal efficiency of the producer was about 73 per cent when the ashes wheeled away contained 16 per cent carbon.

The gas had the following analysis :—

15 per cent . . .	CO_2
10 ,, . . .	CO
23 ,, . . .	H_2
3 ,, . . .	CH_4
49 ,, . . .	N_2

Net B.T.U. per cub. ft. = 129·5.

The steam required from outside sources was $\frac{3}{4}$ lb. per lb. of coal as charged into the producers.

The tar yield was 3 per cent on the fuel gasified, but it was very thick, and contained only 42 per cent of total oils similar to blast furnace tars.

Fifty per cent of the nitrogen in the fuel was recovered as ammonia.

It was found, however, that the quantity of ammonia recovered could be increased if more steam were introduced with the air blast, but the calorific value of the gas was so considerably decreased thereby that the working process and producer plant design was altered in 1893 as per fig. 178, which shows the design which is generally known as the Mond producer, and of which a considerable number has been built in the past.

It consists of fuel-charging hopper A, with central-feeding bell B. C is the circumferential inclined grate suspended from the lower end of the steel shell D, which is lined internally with firebrick and surrounded by the producer shell proper E, the latter being carried by cast-iron chairs F. The depth of fuel bed employed for bituminous coals was between 7′ and 8′.

To enable an air blast saturation temperature of 85° C. (which was found to be the most suitable for a high ammonia yield) to be maintained without undue decrease in the calorific value of the gas, the air and steam mixture was superheated by the hot gas and by passing it through the annular space between shells D and E.

The "super-heater" consisted of a series of mild steel tubes inside which the hot gas travelled in consecutive upward and downward directions, from the gas producer outlet branch G to the super-heater outlet branch H. All these gas tubes were surrounded with a jacket about 4″ to 6″ wide, through which the air blast was passed counter-current-wise to the flow of the gas, the air entering at K on its way to the gas producer jacket.

Using an English bituminous coal the gas temperature would be decreased from about 550° C. to about 300° C., while the air blast (which was sometimes very wet) would be pre-heated from its saturation temperature to 180° to 250° C., depending upon the state of cleanliness of the super-heater. The super-heaters were, of

course, protected from undue radiation losses by insulation materials, nevertheless between 25 and 50 per cent of the heat abstracted from the gas was often lost to the atmosphere. The heat transmission coefficients obtained on super-heaters on plants within the author's experience have varied between 7 and 25 calories per sq. m., ° C., and hour.

Due to the chilling of the outside of the gas tubes by the air blast, carbonaceous deposits of tar, soot, and dust form a scale inside the tubes, so much so that interrup-

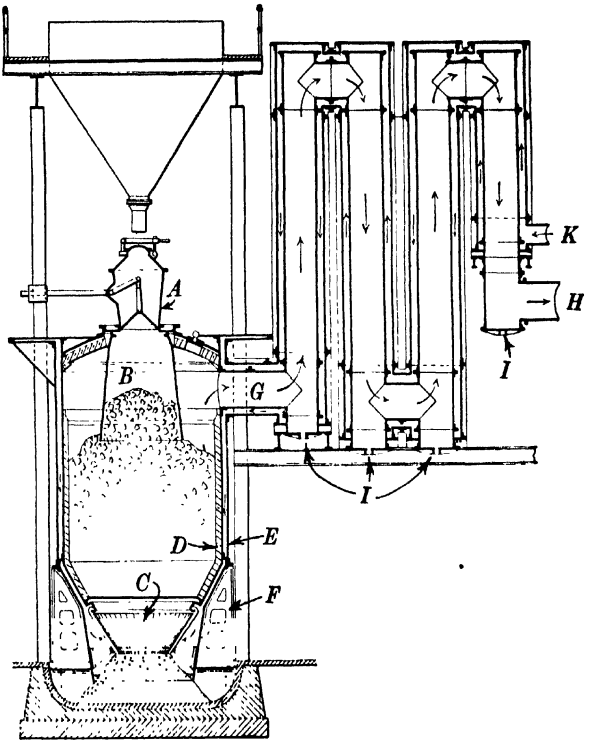

FIG. 178.—L. MOND'S PRODUCER AND SUPER-HEATER.

tion of operation for cleaning purposes has to take place once every six to twelve months. Any loose dust deposits from the gas can, however, be removed without interruption through dust doors I.

The fuel-feeding bell B was provided with the main object of maintaining constantly the conditions favourable for ammonia formation and to cause the volatile matters driven off from the fuel in the bell by the surrounding hot gases to pass out through the hotter fuel zones to be destroyed or cracked there.

To obtain a more even gasification rate (and with the object of destroying the

tar more efficiently) Mond devised another type of fuel bell (see fig. 179), in which part of the gas was taken through a central gas outlet A, and mixed with the gas from the circumference after passing through connections B. This idea was, however, abandoned, since it caused an increase in the tar yield.

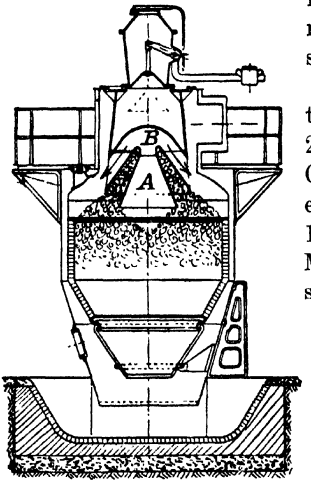

FIG. 179.—L. MOND'S PRODUCER WITH TAR DESTRUCTOR.

Until the very recent developments in low temperature ammonia recovery gas producers (p. 294), such as have been brought out by the Power-Gas Corporation, Ltd., Stockton-on-Tees, all plants, excepting only that of Mr. Q. Moore (figs. 185 and 186), have in their broad principles been based on Mond's combined gas producer and super-heater, such as described above. In the following we shall describe a few of these, viz. the Duff, Crossley, and Lymn types. The gas-generating process employed in all of these types was identical with that of Mond, the various plants differing only in the designs of the producer and super-heater.

The Mond and Lymn plants are built by the Power-Gas Corporation, while the Duff and Moore plants are built by Messrs. Dowson & Mason, Manchester. So far as the author's knowledge goes no Crossley by-product producer gas plants have been built during the last decade.

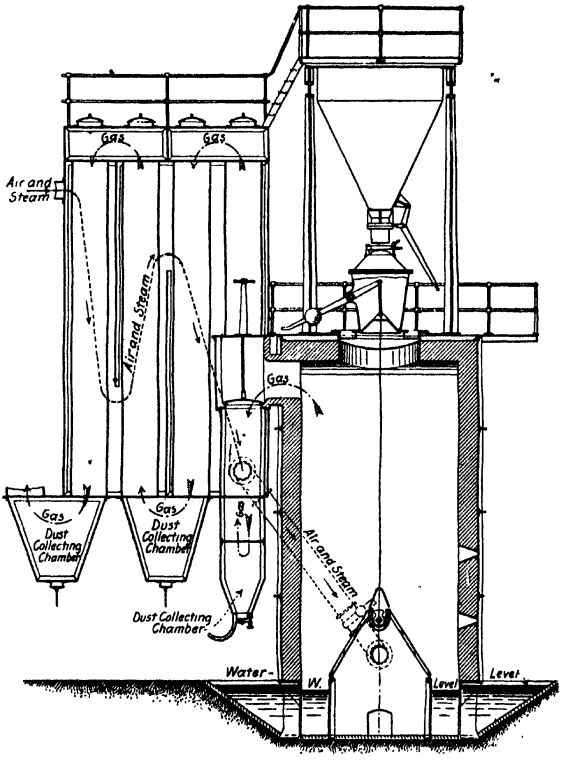

FIG. 180.—DUFF'S BY-PRODUCT PRODUCER WITH SUPER-HEATER.

The Duff by-product recovery producer is shown in fig. 180. In this the transverse Duff grate (figs. 48 and 49) was used, while the producer was made

rectangular in cross section, with the corners somewhat rounded. The super-heater was more compact and cheaper in design and provided with better cleaning and dust-settling facilities than Mond's design, but the difference in expansion between the plates in contact with gas and those in contact with air was not so well provided for. Another type of Duff by-product producer, but with mechanical top, is described in reference to fig. 137.

The Crossley by-product recovery producer, with super-heater, is shown in fig. 181, and consists of a circular producer A, with coal-feeding bell, and central grate. The main novel feature was the super-heater B, which was of the tubular drum type, provided with a diametrical division plate C, thus causing the gas to flow downwards through one half of the tubes and upwards through the other half, air passing outside the tubes.

The lower ends of the tubes, which were about 6″ to 8″ in diameter, faced towards a conical dust-settling pocket D, while the tubes could be scraped externally through poking holes provided on the super-heater top plate. Apart from the expansion difficulties to be expected with a design of this type, the small tubes had a tendency to quickly carbonize up with soot and tar, thus necessitating repeated cleaning.

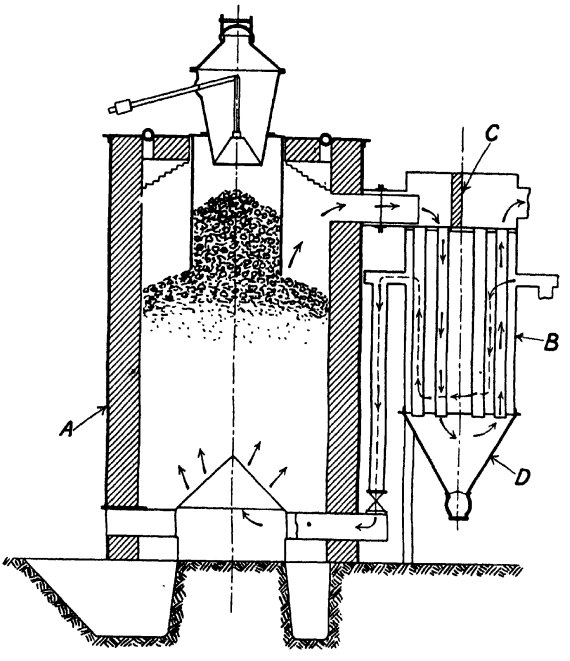

FIG. 181.—CROSSLEY'S BY-PRODUCT PRODUCER WITH SUPER-HEATER.

The Lymn type of by-product recovery producer with super-heater is shown in fig. 182. This producer is provided with the revolving grate shown in fig. 71. The super-heater, the joint invention of Mr. A. H. Lymn and the author, consists of three concentric narrow annular chambers, A, B, and C, through which the air blast was passed in series, baffle plates being provided whereby the current was forced to flow in a long path in counter direction to the gas hot from the producer, which passed through the larger annular spaces left between the air chambers. The gas enters the super-heater in a tangential direction, thus facilitating the separation of dust which was allowed to settle out in a conical pocket D. By this special arrangement of internal concentric air chambers, both sides of the plates forming an air chamber were

surrounded with gas or air of practically the same temperature, thus entirely eliminating expansion troubles. The only exception, viz. the outer steel shell, was connected to the super-heater body by means of an expansion joint E.

If expansion stresses are set up between the various steel shells it will be evident (should leakages be caused thereby) that the air blast (being under higher pressure than the gas) will escape into the gas, which may cause the formation of explosive mixtures. On some super-heaters where leakages caused by expansion stresses exist it is not unusual to find the gas containing between 1 and 2 per cent oxygen. To enable scraping of the heating surface during operation the super-heater is provided with poking holes in the top plate. To maintain a temperature of super-heat above 200° C. it was found an advantage to scrape the surface once to twice per month.

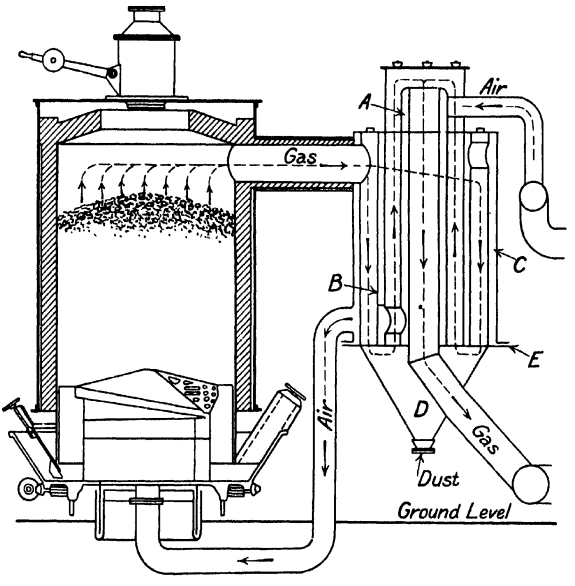

FIG. 182.—LYMN'S BY-PRODUCT PRODUCER WITH SUPER-HEATER.

The following results were obtained on a Lymn plant working at Chelmsford[1]:—

Bituminous coal gasified per week . . . about 150 tons, mainly Nottinghamshire nuts.

Blast temperature . . . . . 84°-85° C.

When all steam was raised by coal-fired boilers, the total coal gasified and burnt under boilers was 125 tons per 100 tons gasified.

Gas Analysis (3 months' average).		*Gas Analysis* (3 months' average).	
CO_2	15·8 per cent.	CH_4 . . .	2·59 per cent.
O	·15 ,,	H_2	26·6 ,,
CO	10·68 ,,	N	44·1 ,,

Net B.T.U. per cub. ft = 138·4.

Ammonia recovery . . . 65 per cent (about 90 lbs. per ton of coal).

Tar yield . . . . . 5-7 per cent, containing about 30 per cent oils and 70 per cent pitch.

[1] W. H. Patchell, *Inst. Elect. Eng.*, March 1920.

The above-described producer designs are all based upon bituminous coal being used as the fuel, but ammonia recovery is by no means limited to this fuel alone;

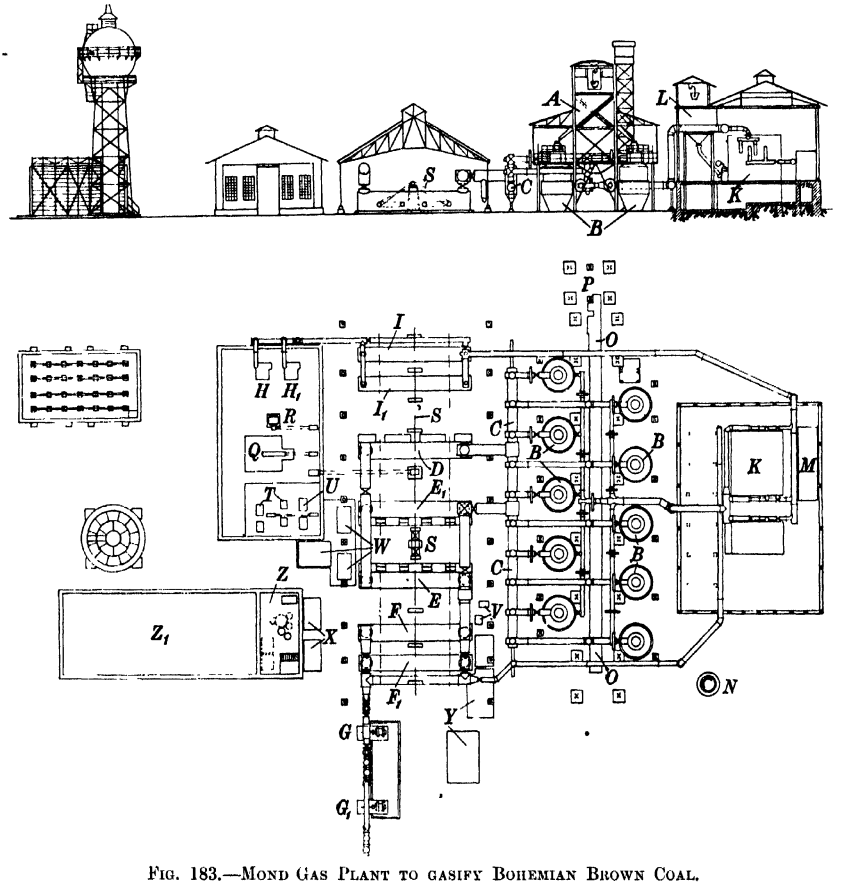

FIG. 183.—MOND GAS PLANT TO GASIFY BOHEMIAN BROWN COAL.

A, Bunker.
B, Producers.
C, Gas Collecting Main.
D, Gas Washer.
E, Ammonia Absorber.
E_1, Spare Washer and Absorber.
FF_1, Gas Coolers.
GG_1, Centrifugal Cleaners.
HH_1, Turbo Blowers.
II_1, Air Saturators.
K, Boilers with Air Super-heater.
L, Coal Bunker for Boilers.
M, Economizer.
N, Chimney.
O, Ash Conveyer.
P, Ash Bunker and Elevator.
Q, Steam Engine.
R, Spare Motor.
S, Shafting for Washers.
T, Pumps for Water Cooler and Elevated Water Tank
U, Liquor Pumps.
V, Circulating Pumps.
W, Liquor Tanks.
X, Acid Tanks.
Y, Settling Tanks.
Z, Sulphate House.
Z_1, Sulphate Store.

indeed, lignites, brown coal, or peat containing up to 50 per cent moisture are being successfully gasified under ammonia recovery conditions.

Fig. 183 shows a Mond ammonia recovery gas producer plant for gasifying moist Bohemian low grade brown coal,[1] the gas from which is used for firing, heating, and annealing furnaces in a tube rolling mill.

[1] Trenkler, *Stahl und Eisen*, No. 42, 1913.

B represents the gas producers, of which 10 are supplied, 9 of which were at work during the month's testing period referred to below, the average load per producer throughout the month being 14·5 tons of T.D. lignite, containing between 32 and 36 per cent moisture when charged.

Due to the high moisture content the gas leaves the producer at a temperature of about 200° C., consequently the sensible heat of the same cannot be utilized to super-heat the air blast for the producers. For this reason air blast super-heaters are provided in the boiler flues between boiler K and economizer M.

The average results of one month's continuous test were as follows :—

Analysis of Fuel.		*Analysis of Gas.*	
Moisture	= 32·2 per cent.	CO_2	15 per cent.
Ash on dry fuel	= 29·32 „	CO	13 „
Nitrogen	= 0·89 „	H_2	25 „
Heating value (as supplied)	= 5220 to 5580 B.T.U. per lb.	CH_4	4·5 „
		N_2	42·5 „
		Net B.T.U. per cub. ft. = 159·9.	

Yields per ton T.D. brown coal:

64,000 cub. ft. of gas	(61·5 per cent thermal efficiency).
64 lbs. of sulphate	(66 per cent recovery efficiency).
31·6 galls. of wet tar	(say 35 per cent moisture).

Boiler house:

Coal burnt per ton T.D. lignite	= ·172 ton.
Feed water evaporated per ton of T.D. lignite	= ·9 „

The very high tar yield of over 20 gallons per ton T.D. fuel should be noted, the reason for which is mainly to be found in the fact that the gas temperature leaving the producer is much lower than is common for bituminous coal producers working under ammonia recovery conditions; obviously the brown coal used must be one containing a large quantity of tar-forming constituents.

The following results refer to the gasification of a French lignite (La Savoie) in the peat recovery plant shown in fig. 184 :—

Analysis of Fuel.		*Analysis of Gas.*	
Moisture	40·52 per cent.	CO_2	20·8 per cent.
On dry substance:		O_2	·2 „
Ash	17·67 „	CO	10·6 „
Volatile matter	50·10 „	H_2	25·6 „
Nitrogen	1·83 „	CH_4	5·4 „
Total carbon	49·91 „	N_2	37·4 „
Cal. value	8761 B.T.U. per lb.	Net B.T.U. per cub. ft. = 162·6.	
Grading = lumps.			

Gas yield per ton T.D. fuel	= 78,300 cub. ft. (15° C.).
Ammonium sulphate per ton of T.D. fuel	= 92·5 lbs. (46·3 per cent recovery).

Fig. 184 shows a photograph of a Mond ammonia recovery gas producer plant designed to gasify a maximum quantity of 100 tons per diem of Italian peat, the

The above-described producer designs are all based upon bituminous coal being used as the fuel, but ammonia recovery is by no means limited to this fuel alone;

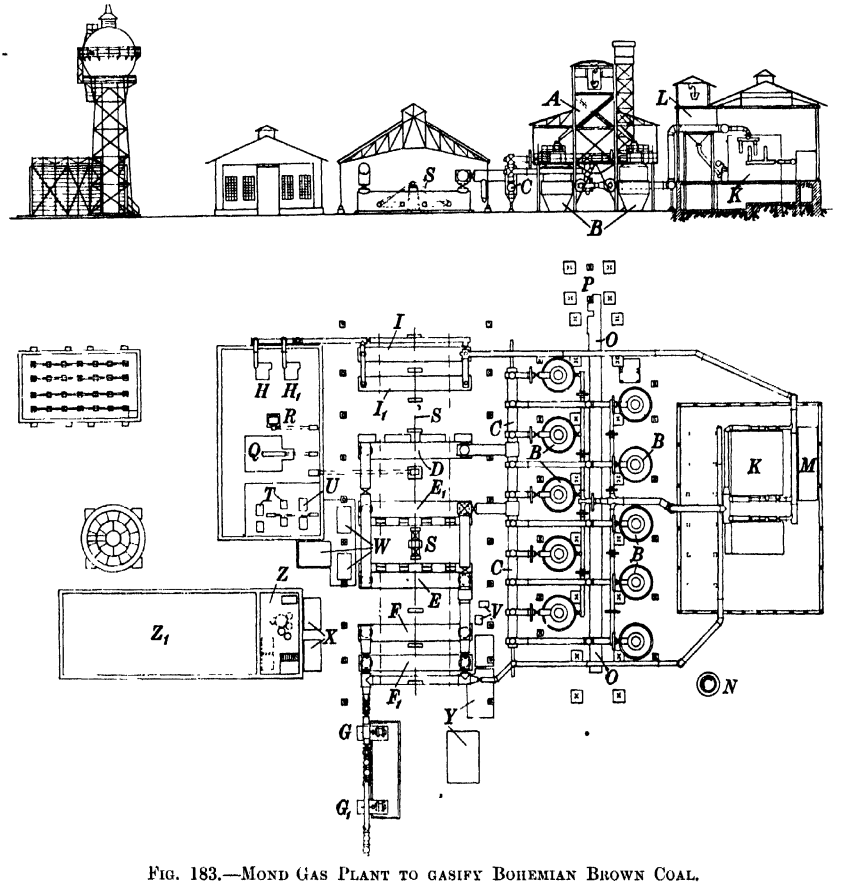

FIG. 183.—MOND GAS PLANT TO GASIFY BOHEMIAN BROWN COAL.

A, Bunker.
B, Producers.
C, Gas Collecting Main.
D, Gas Washer.
E, Ammonia Absorber.
E_1, Spare Washer and Absorber.
FF_1, Gas Coolers.
GG_1, Centrifugal Cleaners.
HH_1, Turbo Blowers.
II_1, Air Saturators.
K, Boilers with Air Super-heater.
L, Coal Bunker for Boilers.
M, Economizer.
N, Chimney.
O, Ash Conveyer.
P, Ash Bunker and Elevator.
Q, Steam Engine.
R, Spare Motor.
S, Shafting for Washers.
T, Pumps for Water Cooler and Elevated Water Tank
U, Liquor Pumps.
V, Circulating Pumps.
W, Liquor Tanks.
X, Acid Tanks.
Y, Settling Tanks.
Z, Sulphate House.
Z_1, Sulphate Store.

indeed, lignites, brown coal, or peat containing up to 50 per cent moisture are being successfully gasified under ammonia recovery conditions.

Fig. 183 shows a Mond ammonia recovery gas producer plant for gasifying moist Bohemian low grade brown coal,[1] the gas from which is used for firing, heating, and annealing furnaces in a tube rolling mill.

[1] Trenkler, *Stahl und Eisen*, No. 42, 1913.

saturated with steam, is used to obtain a large ammonia yield. Of the whole steam added to the air blast, often less than one-third is decomposed in contact with the carbon in the fuel, the action of the undecomposed steam being not only to favour the formation of ammonia but also to serve as a dilution agent and to effect a quick removal of the ammonia from the hot zones in the producer.

The super-heaters, which are expensive to build and clean, are only required because the wet air blast would otherwise chill the lower zones of the fuel bed so much that the reactions between the steam and CO_2 with the carbon could not be sufficiently completed in the time available. They have been referred to in the past as heat-saving appliances, but this is not the case; their main object is to maintain the right temperature for the required reactions. The sensible heat in the gas leaving the Mond producer in the ordinary way, at say 550° C., does not exist in the cooled gas, *i.e.* it is all lost. If, on the other hand, cold air blast were introduced, it is likely that the gas outlet temperature would be lower, *i.e.* that the sensible heat loss would be less, but that the gas quality would be decreased and the ashes contain more unburnt carbon.

The disadvantages attached to the Mond process did not, previous to the War, have any serious effect upon the commercial success of these plants, mainly because fuel and labour were cheap, while sulphate of ammonia had a comparatively high and stable market price.

With existing industrial conditions of expensive labour, fuel, and first cost, not to speak of the possibility of a considerable future reduction in the market price for sulphate of ammonia (due to several successful synthetic ammonia processes), the position becomes an entirely different one; so much so that during the last few years a very large number of the gas producer plants in this country using the Mond by-product recovery process have been shut down, or worked without recovering the ammonia.

The reason for this may be found in the following causes :—

(1) The high consumption of steam, which exceeded considerably that of non-recovery gas producers.
(2) The low calorific value of the gas.
(3) The high capital outlay.
(4) The high labour charges.
(5) The low gasification efficiency.
(6) The elaborate cooling and cleaning plant necessary on account of the high sensible and latent heat content in the crude gas.
(7) The employment of super-heaters.

With the extensive knowledge gained during thirty years' experience of various *designs* of plant to operate on the Mond process, it was clearly a matter of devising a *new process* whereby ammonia could be recovered, while all of the above disadvantages were reduced to the smallest possible degree.

So far two different ammonia recovery processes have been evolved :—

(1) The *Moore* process, in which the ammonia yielded from the fuel is prevented from decomposition by *chilling* the gas producer sides.

(2) The *Power Gas* process, in which the ammonia is obtained by submitting each fuel particle to a *slow* and *uniform* gasification.

Both of these processes necessarily cause the gas to leave the producer at a low temperature, which in case (1) is obtained indirectly by water-cooling, and in case (2) directly, the fuel itself forming the cooling medium ; the latter process thus also has the effect of submitting the fuel to a true low temperature treatment.

The Moore by-product gas producer was placed on the market about ten years ago.[1] It is illustrated in figs. 185 and 186, the former being a drawing of a 300 B.H.P. plant, and the latter a photograph of the same installation.

The producer is elliptical in cross section and tapered in longitudinal section ; it is provided with two fuel-feeding hoppers at the top and two revolving dry ash tables at the base, which displace the ashes into a conical storage pocket at the lower end of the producer casing.

The producer body is divided into three sections, of which the lower one is brick-lined, the middle one water-cooled, and the top one air-cooled. The air blast is saturated with steam at the region of 72° to 78° C., depending upon the clinkering tendency of the coal in use ; it is supplied in a non-superheated state to the grates, which have the shape of two circumferential grates joined together.

A high temperature oxidation and gasification zone exists in the lower part of the producer, the gases from which are suddenly chilled on entering the water-cooled middle zone, thus preventing a quick decomposition of the ammonia formed from the coke in the lower zone. The reason for the producer body being elliptical is to cause the cooling effect of the water jacket to penetrate more or less to the centre of the fuel bed. Similarly, to prevent the tendency of the coal jamming or arching between the narrow sides of the producer, the whole body is made to taper in a downward direction.

The heat absorbed by the water jacket is utilized for steam-raising purposes, about half the quantity of steam required for gasification being raised in this way.

The following have been given as typical operating results obtained :—

Fuel.

Moisture	8	per cent.
On dry substance :		
Volatile matter	33	,,
Ash	13	,,
Nitrogen	1·3	,,

Steam used.

0·8 to 1 lb. per lb. of coal.

Amount decomposed . . 54 per cent.

[1] *Iron and Coal Trades Review*, December 21, 1913.

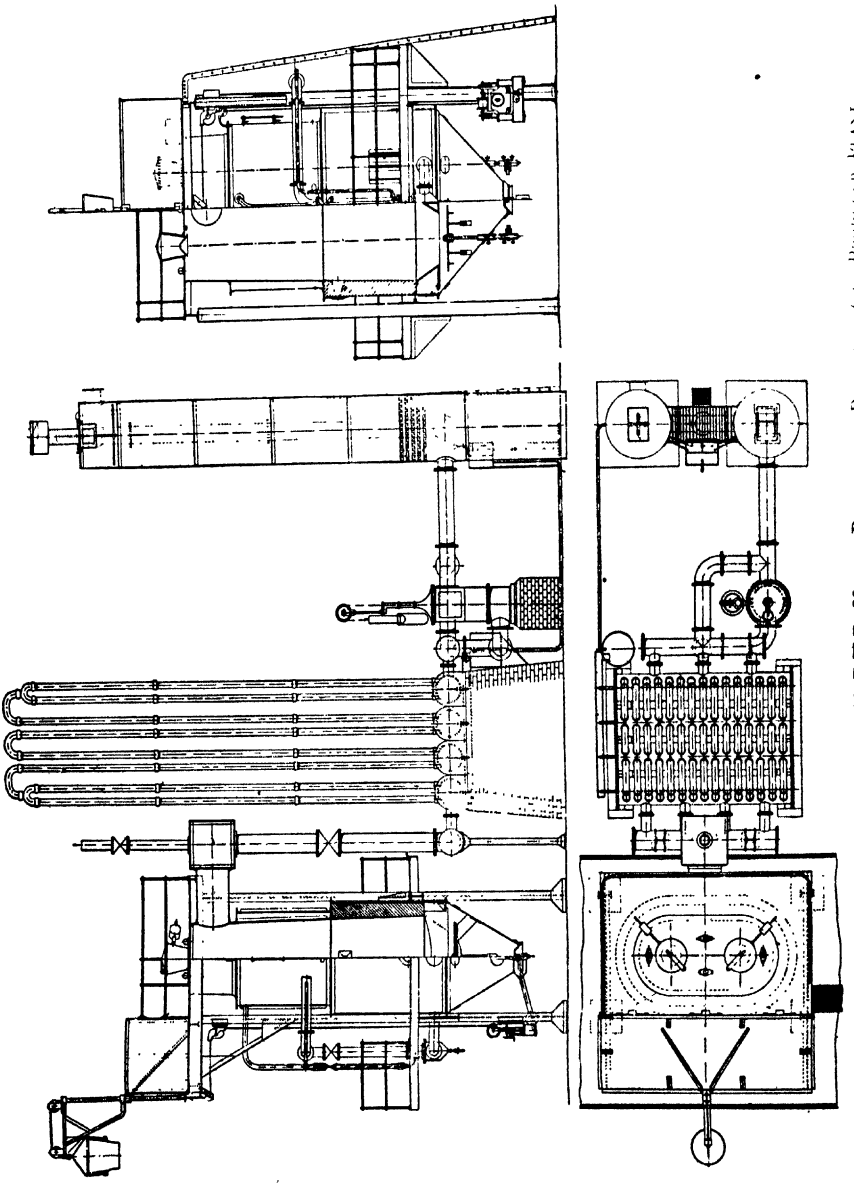

FIG. 185.—PLAN AND ELEVATION OF 300 B.H.P. MOORE BY-PRODUCT RECTANGULAR GAS PRODUCER PLANT.

(1) The *Moore* process, in which the ammonia yielded from the fuel is prevented from decomposition by *chilling* the gas producer sides.

(2) The *Power Gas* process, in which the ammonia is obtained by submitting each fuel particle to a *slow* and *uniform* gasification.

Both of these processes necessarily cause the gas to leave the producer at a low temperature, which in case (1) is obtained indirectly by water-cooling, and in case (2) directly, the fuel itself forming the cooling medium ; the latter process thus also has the effect of submitting the fuel to a true low temperature treatment.

The Moore by-product gas producer was placed on the market about ten years ago.[1] It is illustrated in figs. 185 and 186, the former being a drawing of a 300 B.H.P. plant, and the latter a photograph of the same installation.

The producer is elliptical in cross section and tapered in longitudinal section ; it is provided with two fuel-feeding hoppers at the top and two revolving dry ash tables at the base, which displace the ashes into a conical storage pocket at the lower end of the producer casing.

The producer body is divided into three sections, of which the lower one is brick-lined, the middle one water-cooled, and the top one air-cooled. The air blast is saturated with steam at the region of 72° to 78° C., depending upon the clinkering tendency of the coal in use ; it is supplied in a non-superheated state to the grates, which have the shape of two circumferential grates joined together.

A high temperature oxidation and gasification zone exists in the lower part of the producer, the gases from which are suddenly chilled on entering the water-cooled middle zone, thus preventing a quick decomposition of the ammonia formed from the coke in the lower zone. The reason for the producer body being elliptical is to cause the cooling effect of the water jacket to penetrate more or less to the centre of the fuel bed. Similarly, to prevent the tendency of the coal jamming or arching between the narrow sides of the producer, the whole body is made to taper in a downward direction.

The heat absorbed by the water jacket is utilized for steam-raising purposes, about half the quantity of steam required for gasification being raised in this way.

The following have been given as typical operating results obtained :—

Fuel.

Moisture	8	per cent.
On dry substance :		
Volatile matter	33	,,
Ash	13	,,
Nitrogen	1·3	,,

Steam used.

0·8 to 1 lb. per lb. of coal.

Amount decomposed . . 54 per cent.

[1] *Iron and Coal Trades Review*, December 21, 1913.

	Size.	Steam Consumption.
15 cwts. per hour	12′ 0″ × 6′ 0″	1·25 lbs./lb. of coal.
10 ,, ,, ...	9′ 3″ × 4′ 10″	1 ,, ,,
7½ ,, ,, ...	8′ 0″ × 4′ 0″	·9 ,, ,,

The cooling and cleaning plant used for the gas from this plant and illustrated in figs. 185, 186 is described on p. 412.

In the Power Gas Corporation's low temperature gasification process [1] the fuel bed depth is increased considerably, thereby causing the time factor to be made larger with a corresponding increase in the amount of steam decomposed in the producer. The very slow gasification of the fuel which is hereby obtained enables the tendency of the fuel towards caking to be greatly decreased, and causes poking to be practically eliminated. When gasifying a Yorkshire fuel (which required poking in an ordinary Mond producer) a 5′ diam. low temperature producer was worked for five months on end without a poker ever having been inserted through the top poking holes.[2]

The gas outlet temperature being always below 300° C., the fuel on introduction is not heated to a temperature above that of the decomposition of the tar-forming bodies, hence the tar is evolved in large quantities and of a quality approaching that of low temperature tar.

By special devices and careful dimensioning of the internal parts of the gas producer, it has become possible to obtain even temperatures at all parts of the fuel bed, so that no particle of fuel at the same height above the grate is treated at a different temperature.

The following represent the average results of a three months' continuous run on a 5′ internal diam. producer :—

Load: 5·25 tons per diem (26 lbs. per sq. ft. and hour).
Gas temperature 133° C.

Blast: Temperature = 75·2° C., *no super-heat.*
Steam used = ·94 lbs. per lb. of coal.
Pressure = 25 cm. W.G.

Fuel Analysis. Moisture free:		*Ash Analysis.*		*Gas Analysis.*	
Ash . . .	8·1 %	SiO_2 . . .	31·7%	CO_2 . . .	8·3%
Volatile matter .	36·2 %	Fe_2O_3 . . .	29·4%	CO . . .	21 %
Carbon . . .	73·6 %	Al_2O_3 . . .	24·7%	H_2 . . .	20·5%
Hydrogen . .	5·3 %	CaO . . .	5·8%	CH_4 . . .	4·9%
Oxygen . .	14·0 %	MgO . . .	trace	N_2 . . .	45·3%
Nitrogen . .	1·56%	SO_3 . . .	7·4%	Net B.T.U. per cub. ft. = 178	
Net cal. val. . .	12,200				
Swelling = 46 per cent.					

Gas yield	= 120,000 cub. ft. per ton T.D. fuel.
Tar yield	= 20 gallons per ton.
Ammonia yield	= 90 lbs. per ton (56 per cent efficiency).
Gasification efficiency, including tar	= 91·5 per cent.
,, ,, excluding ,, ...	= 78·4 ,,

[1] Patents granted to or applied for by W. Beswick and N. E. Rambush.

[2] The reader is also referred to a paper read by the author before West of Scotland Iron and Steel Institute, session 1922–1923.

Several of the Mond gas producer plants in this country have been adapted to work on the lines of the above-described process.

In most of these existing plants the arrangement is such that it is difficult to make a complete conversion to true low temperature gasification conditions. Fig. 187 shows a photograph of such a converted semi-low temperature gas producer.

The following are a series of results obtained during one week's continuous night and day testing period on this particular producer :—

Duration of test	168 hours.
Average load on producer : tons of dry coal per 24 hours	25·2
Net calorific value of fuel : B.T.U. per lb. of dry coal	11,577
Maximum gas rate : cub. ft. per hour reduced to 0° C. and 760 mm. Hg. (N.T.P.)	297,000
Minimum gas rate : cub. ft. per hour reduced to 0° C. and 760 mm. Hg. (N.T.P.)	44,100
Temperature of air blast	81° C.
Total steam : lbs./lb. of fuel, a large part of which is raised in the air tower	1·33

Gas Analysis.

CO_2	15·2	CH_4	3·8
CO	12·7	N_2	40·5
H_2	27·8		

Total combustibles	44·3
Net calorific value: B.T.U. per cub. ft. (N.T.P.)	160·3
Gas yield cub. ft. at N.T.P. per ton of dry fuel	122,400
Per cent carbon in ash	15·6
Dry tar in crude gas : lbs. per ton dry coal	194
Ammonia in crude gas : lbs. of sulphate of ammonia (25 per cent) per ton of dry coal	99
Nitrogen content of dry coal	1·5 per cent.
Thermal efficiency	76

Fuel Grading.

Above ½″	55 per cent.
½″-¼″	27 ,,
¼″-⅛″	10 ,,
Below ⅛″	8 ,,

Some typical operating results from a Mond gas, a semi-low temperature, and a true low temperature by-product recovery producer gas plant are given in examples Nos. 3, 4, and 5 in Table 25, p. 68.

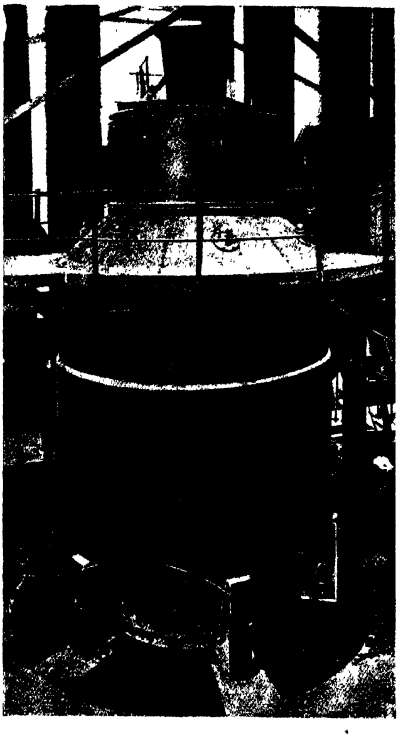

FIG. 187.—PHOTOGRAPH OF MOND PRODUCER MODIFIED TO WORK ON LOW TEMPERATURE BY-PRODUCT RECOVERY PROCESS.

To emphasize further the comparative advantages of the latter process over the Mond process, fig. 188 shows comparative block plans of a complete installation of 100 tons per diem gasification capacity on either system, while the table below will give the operating conditions [1] :—

	Mond.	Low Temperature.
Tons gasified per diem	100	100
Space occupied in sq. ft.	55,000	25,000
Steam required per ton of coal from outside sources	1·9 tons	1·05 tons
Sulphate recovered	90 lbs. per ton	90 lbs. per ton
Dry tar recovered	10 galls.	21 galls.
Capital costs	100 (pre-war)	100 (1922)
Number of men required for operation	10	14
Thermal gasification efficiency of producer :		
Including tar	74	92·3
Excluding tar	68	80
Over-all thermal gasification efficiency :		
If steam raised in separate coal-fired boilers	53·5	69·5
If tar oils used for raising steam	56·7	80
Gas yield per ton T.D. coal	133,500	118,000
Gas analysis :		
CO_2	16	8·3
CO	11	20·5
H_2	25	20·5
CH_4	2·7	5·5
N_2	45·3	44·9
Net B.T.U. per cub. ft. (N.T.P.)	135·9	182·3
Theoretical flame temperature of gas burnt in air with 3 per cent excess oxygen in products of combustion (see p. 516)	1430	1606

From the above it will be realized that all the disadvantages set forward on p. 290 as a drawback to plants working on the Mond principle have been considerably decreased.

How much each single advantage will mean to any particular installation is difficult to judge from the above, but wherever the gas is being used for furnace firing the fuel saving of the one process over the other is not only indicated by the over-all thermal efficiency figures. Since less therms are required to fire a furnace with a gas of high flame temperature than with a less intense gas, an additional saving may be expected on this score, the actual saving depending upon the particular heating problem involved.

[1] "Production of Byeproduct Producer Gas under Low Temperature Conditions," *J. West of Scotland I. and S.I.*, 1922–1923.

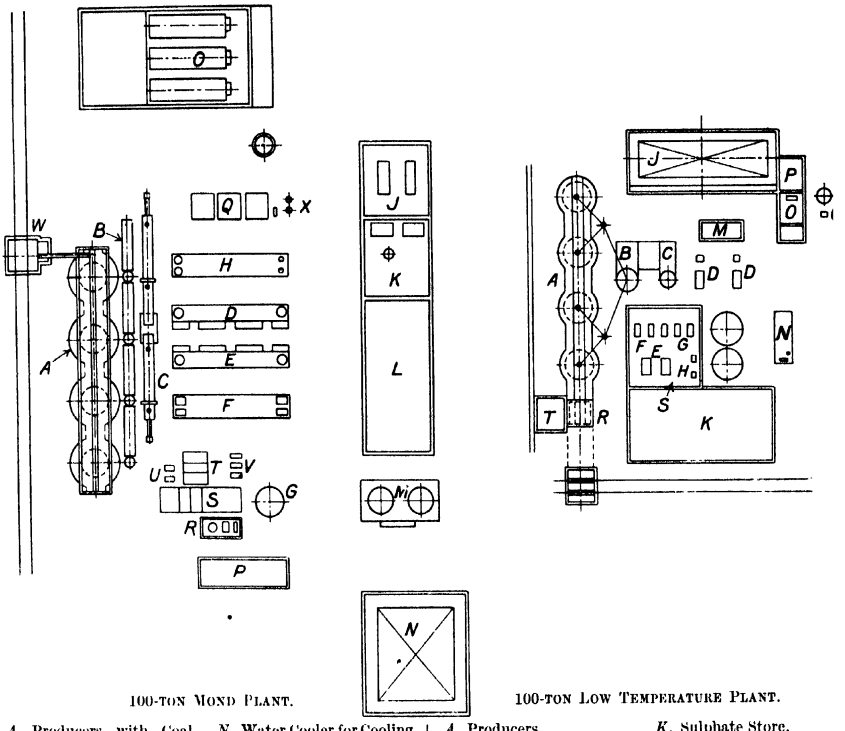

100-TON MOND PLANT. 100-TON LOW TEMPERATURE PLANT.

A, Producers with Coal Bunkers.
B, Super-heaters.
C, Gas Collecting Main.
D, Washer (Mechanical).
E, Ammonia Absorber (Mechanical).
F, Cooler (Mechanical).
G, Cooling Tower.
H, Air Saturator (Mechanical).
J, Air Blowers.
K, Sulphate Evaporating Plant.
L, Sulphate Store.
M, Tar Dehydrating Plant.
N, Water Cooler for Cooling Tower *G*.
O, Boilers (Coal fired).
P, Tar Collecting Tank.
Q, Stock Liquor Tanks.
R, Tar Pump, etc.
S, Settling Tank for Cooling Tower *G*.
T, Water Circulating Tanks for *F* and *H*.
U, Water Circulating Pumps for *F* and *H*.
V, Water Circulating Pumps for *G* and *N*.
W, Coal Elevator.
X, Liquor Eggs for *K*.

A, Producers.
B, Ammonia Absorber with Settling Tank.
C, Cooling Tower with Settling Tank.
D, Centrifugal Cleaners.
E, Air Blowers.
F, Sulphate Liquor Pumps for *B*.
G, Water Pumps for *C* and *J*.
H, Sulphate Liquor Pumps for *S*.
J, Water Cooler for *C*.
K, Sulphate Store.
L, Stock Liquor Tanks.
M, Tar Settling Tank f *D*.
N, Boiler (Gas fired).
O, Tar Pump.
P, Tar Collecting Tank.
Q, Tar Dehydrating Plar
R, Coal Hoist.
S, Sulphate Evaporati Plant above Mach ery House.
T, Ash Bunker.

FIG. 188.—BLOCK PLANS OF 100-TON MOND PLANT AND 100-TON LOW TEMPERATURE BY-PRODU RECOVERY PLANT.

2. TAR RECOVERY PRODUCERS

Whereas it will be clear that all improvements and original work on the subje of formation of ammonia in gas producers have taken place in Great Britain, it mu be said with equal justification that the main investigations and applications the subject of recovering a high yield of valuable tar from coal in gas produce have been evolved in Germany. "Necessity is the mother of invention," says t old proverb, and in no way is this more clearly confirmed than when we study t

multitude of propositions brought forward in Germany during the war period with a view to producing oils from fuels either by distillation or gasification.

Apparently the first careful examination of the gas producer tar oils was on a Mond gas plant built by Messrs. Thyssen in 1914. Fig. 189 shows the producer which was employed.[1] This was of the mechanical grate type (see fig. 75) with Mond type central-feeding bell, while the upper part was water-jacketed as in Moore's producer, otherwise the producer itself presents no special features. Under

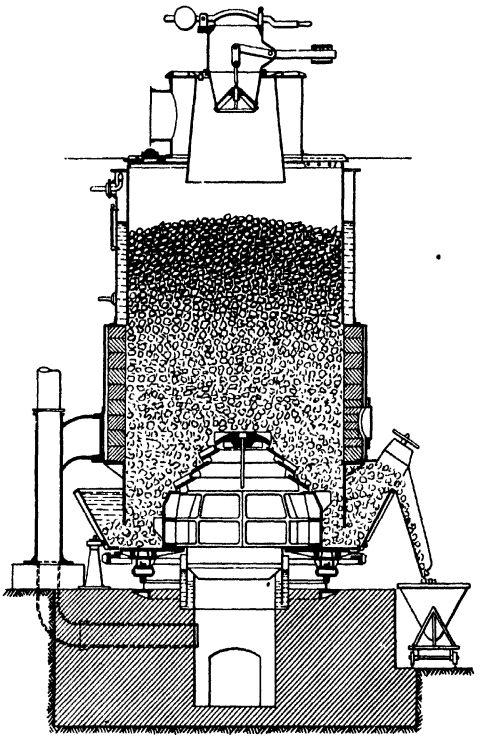

FIG. 189.—THYSSEN'S MOND GAS PRODUCER.

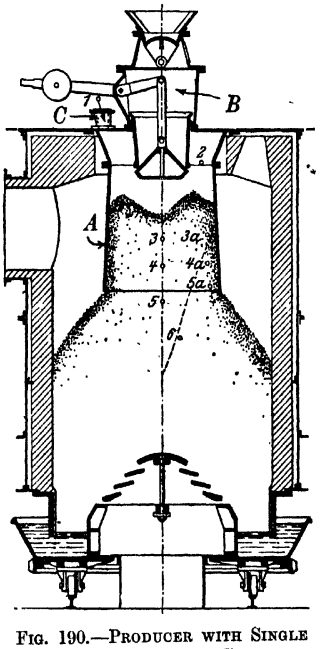

FIG. 190.—PRODUCER WITH SINGLE FUEL DISTILLATION BELL.

low load conditions a good yield of tar was obtained, and when this in 1915 was found suitable for the production of lubricating oils, the basis for the low temperature tar production in gas producers had been obtained.

The first designs all involved the pre-distillation of the fuel in retorts hung into the producer like a bell on a Mond producer, through which part of the hot crude producer gas was passed, thus causing a distillation both by indirect heating (of the retort sides by the main quantity of the surrounding hot producer gas) and by direct heating (by the gas that was passed through the retort).

[1] Roser, *Z.V. d. I.*, October 16, 1920.

Fig. 190 shows a design as first installed by Deutsche Mondgas Ges.;[1] this embodies the stationary fuel bell A suspended from the producer top and carrying gas outlet branch C and fuel-charging bell B. As might be expected, uneven burning of the fuel in the producer took place due to the "trimming" of the coal or coke as it left the lower mouth of the bell. Furthermore, the temperatures existing at various parts of the bell were uneven, as will be obvious from the following records :—

Temperature at point 1	220° C.
,, 2	290°
,, 3	300°
,, 3*a*	450°
,, 4	400°
,, 4*a*	660°
,, 5	485°
,, 5*a*	730°
,, 6	about 600°

In other words, the temperatures at the edges of the bell or retort were more than 150° higher than in the centre.

Fig. 191 shows Rehmann's producer design. In this the single bell of the above producer was substituted with a number of smaller ones fed from one central-charging hopper.

Fig. 192 shows a design used by Ehrhardt and Sehmer. In this two diametrically opposite fuel bells or retorts A were fixed to a revolvable table D, the mouth of the retorts on revolving thus sweeping across the top surface of the fuel bed. Fuel was fed independently to each bell by a hopper B, while the gas was removed through a central gas offtake C.

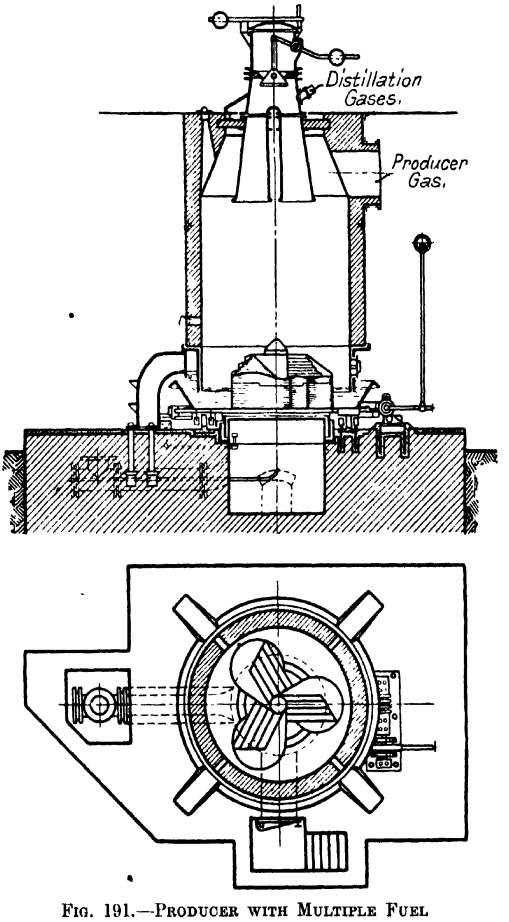

FIG. 191.—PRODUCER WITH MULTIPLE FUEL DISTILLATION BELLS.

The disadvantages coupled with the operation of retorts of this kind were mainly caused by the hanging up of coal (especially of the caking varieties) in the retorts themselves, and the fact that these were quickly emptied whenever there was a "fall" in the producer. The sudden emptying of a retort sets up pressure

[1] Jaworski, *Stahl und Eisen*, March 10, 1921.

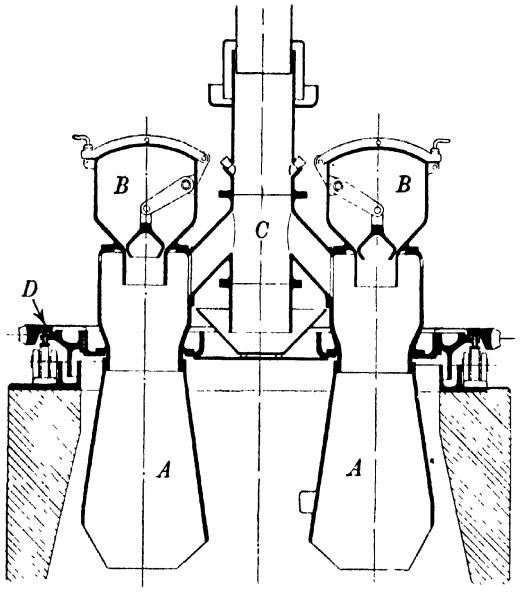

FIG. 192.—PRODUCER WITH REVOLVABLE FUEL DISTILLATION BELLS.

fluctuations in the retort exhausting system and causes operating difficulties apart from those of the producer proper.

To obviate these defects, the fuel level at the top of the producer was maintained below the mouth of the pre-distillation retort, which was designed also to form a kind of mechanical feed. Various devices of this type are shown in figs. 193 to 195.

Fig. 193 shows the Linck type of mechanical retort[1] built by A. G. f. Brennstoff Vergasung. This consists of an annular stationary retort A, from the top of which is suspended a revolving base plate B, driven by worm gear C, and carrying fuel hopper D. The base plate possesses openings E_1 and E_2, whereby on revolution the fuel is distributed over the top of the fuel bed in the producer proper. The base of the retort A is provided with perforations G, while the revolvable finger F prevents too large quantities of fuel falling out of the retort at a time; it also maintains the base of the fuel in the retort in constant motion. Part of the producer gas is sucked off through the retort, where its sensible heat is utilized for distillation, the mixed gas leaving for the cleaning plant through pipe H. The power consumption is $\frac{1}{4}$ B.H.P.

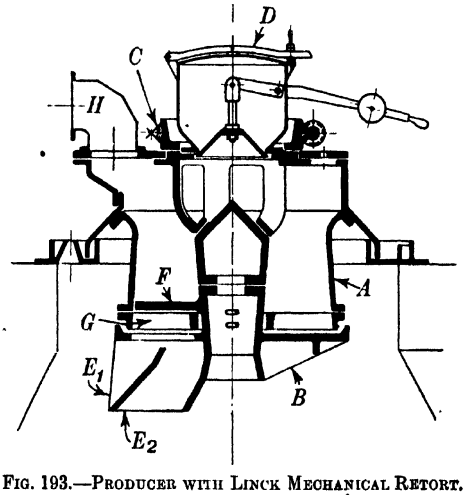

FIG. 193.—PRODUCER WITH LINCK MECHANICAL RETORT.

The following operating results were obtained on a steel works on which static

[1] K. Linck, *Stahl und Eisen*, March 10, 1921.

Morgan producers had been fitted with this design of pre-distillation apparatus (a photograph of this plant is shown in fig. 194).

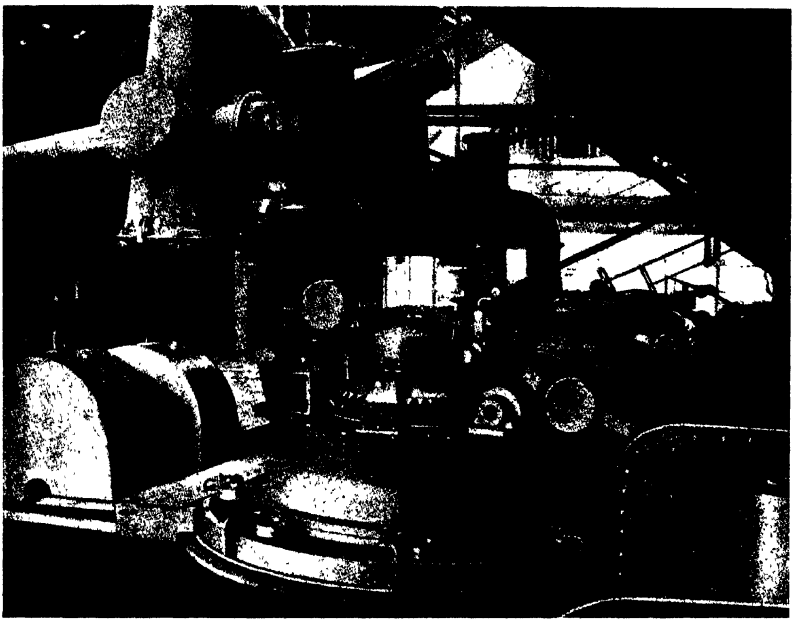

FIG. 194.—PHOTOGRAPH OF LINCK MECHANICAL RETORT.

Coal :

Heating value, 7300 cals. per kg. (13,150 B.T.U. per lb.).
Gasification per producer per 24 hours = 8·6 tons.
Coal gasified per ton steel melted in Siemens furnaces = 251 kg. (552 lbs.).
Carbon in ash = 7·7 per cent.

Gas :

Blast temperature = 125° C. (super-heated).
Steam per lb. of coal = 0·132 lb.
Analysis (mixed gases) :

CO_2	4-6	per cent.
CO	22-26	,,
H_2	10-12	,,
CH_4	3	,,

Tar Yield = 6 per cent on coal gasified, coal in retort for two to three hours. 22·5 per cent of total producer gas being passed through

Temperatures :

Coke gas leaving producers	753° C.
Retort gas leaving producers	150°
Retort gas on rejoining coke gas in gas main	35°
Mixed gases at furnace	603°
Temperature drop due to tar removal	150°

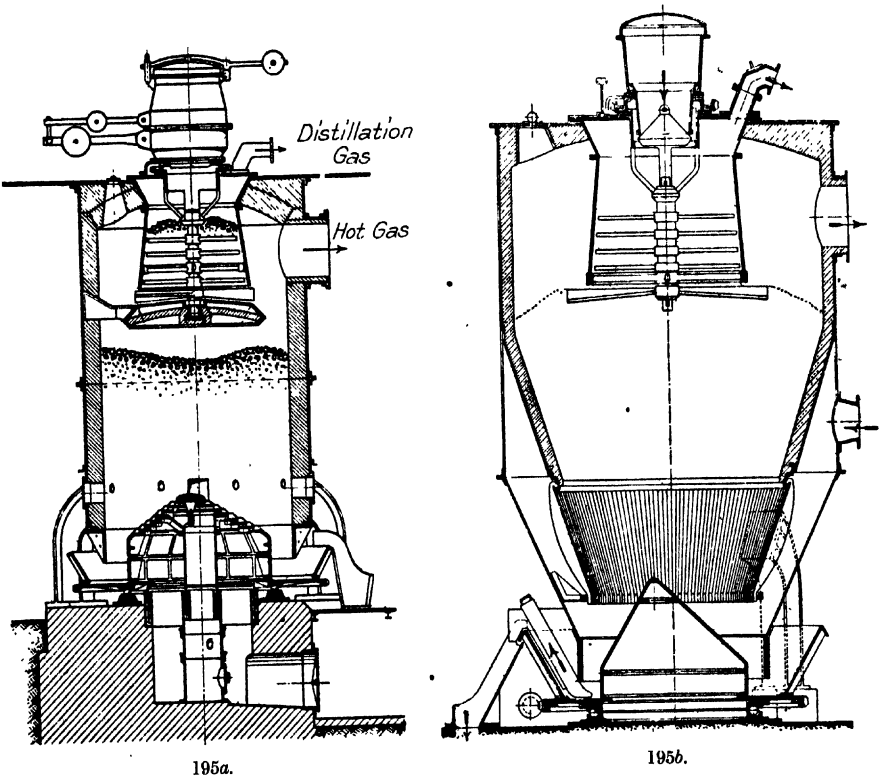

195*a*. 195*b*.

FIGS. 195*a* AND 195*b*.—MECHANICALLY STIRRED PRE-DISTILLATION RETORT.

When the producers were at work without recovering tar (that is, when gasification takes place in the producer in the ordinary way), the gas outlet temperature at the producers was 796° C. and at the furnaces 702° C. In other words, a smaller quantity of the sensible heat in the gas is available at the furnace, this heat having been utilized for the pre-distillation of the coal.

Assuming 4·5 cub. m. of gas being made per kg. of coal, then the approximate sensible heat contained in $(4{\cdot}5\frac{22{\cdot}5}{100} =)$ 1 cub. m. of gas between 753° C. and 35° C. = 270 cals., which represents 3·7 per cent of the heat contained in 1 kg. of coal.

Morgan producers had been fitted with this design of pre-distillation apparatus (a photograph of this plant is shown in fig. 194).

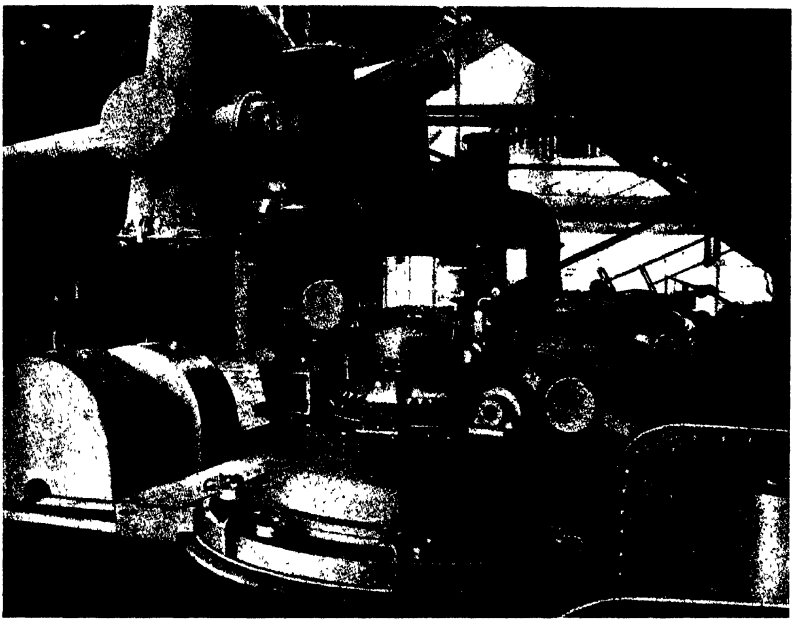

FIG. 194.—PHOTOGRAPH OF LINCK MECHANICAL RETORT.

Coal :

Heating value, 7300 cals. per kg. (13,150 B.T.U. per lb.).
Gasification per producer per 24 hours = 8·6 tons.
Coal gasified per ton steel melted in Siemens furnaces = 251 kg. (552 lbs.).
Carbon in ash = 7·7 per cent.

Gas :

Blast temperature = 125° C. (super-heated).
Steam per lb. of coal = 0·132 lb.
Analysis (mixed gases) :

CO_2	4-6	per cent.
CO	22-26	,,
H_2	10-12	,,
CH_4	3	,,

Tar Yield = 6 per cent on coal gasified, coal in retort for two to three hours. 22·5 per cent of total producer gas being passed through

The following gives a summary of Jaworski's statements regarding the results obtained by the stationary and mechanically stirred fuel bell (or pre-distillation chamber) :—

	Producer with	
	Fixed Retort.	Stirred Retort.
Tar :		
Yield per cent	4	7·4
Pitch content per cent	60-65	22-14
Heating value cals.	8700	8200
Analysis per cent :		
C	78-80	..
H	7- 8	..
O	12-15	.
N	1	..
S	·5	..
Gas :		
Analysis :		
CO_2	8·2	2·1
CO	19	29·6
H_2	16·3	6·8
CH_4	2·5	1·9
CnHm	·4	·6
Net B.T.U./ft.^{3} (N.T.P.)	142·4	148·5
Steam used, lbs. per lb. of coal	·5 to ·7	..

In this particular comparison there can be no doubt that less coal will have to be gasified with the stirred retort for the same furnace output, the extra heat present in the tar recovered being more than balanced by the heat saving caused by the higher furnace efficiency—obtained with the richer gas of higher flame temperature.

All the systems illustrated from fig. 190 to fig. 195 have comprised pre-distillation chambers which were suspended inside the gas producer proper and heated partly from the outside and partly by the sensible heat of the gas sucked through. There has been no lack of applications in which the fuel is heated *by the sensible heat of the gas only*, in retorts of smaller cross section superimposed upon the gas producer proper ; such producer types are shown in figs. 196 to 200.

Fig. 196 shows the Pintsch design of gas producer with superimposed retort, such as is built for dealing with brown coal briquettes, non-caking coals, wood,

›eat, or raw brown coal lumps, the moisture content of which various fuels is not o exceed 25 per cent.

A is the brick-lined steel retort which is placed on the top of the crown of he main producer body B. Two separate gas outlets C and D enable the " coke

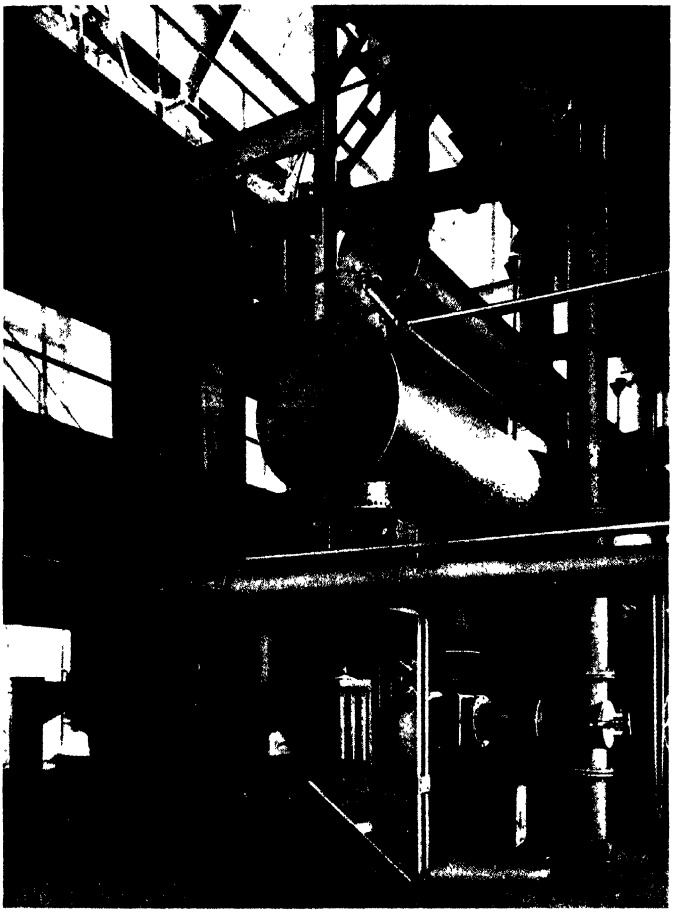

FIG. 197.—PHOTOGRAPH OF PINTSCH PRODUCER WITH SUPERIMPOSED PRE-DISTILLATION RETORT.

›roducer gas " and the " retort gas " to be conducted to their separate cleaning plants ›r gas mains. By regulation of valves in either pipe system, it is possible to adjust he quantity of the hot gas that is to be taken through the retort for distillation ›urposes. The quantity obviously alters with the nature of the fuel, but, generally ›peaking, the higher the moisture content, the greater the amount of gas to be passed

through the distillation retort. Poking holes E and F are provided whereby either fuel column may be independently poked.

The temperature of the gases at the junction of the two shafts may be as high as 800° C., while the gas flow through the retort is controlled to give an outlet temperature of 100° to 150° C. The time during which the fuel is subjected to distillation is longer than with the previously described mechanical pre-distillation chambers, but it would appear as if "trimming" of the fuel to the edges of the main producer will take place just as with a stationary central bell.

A gasification test [1] made on such a producer (a photograph of which is shown in fig. 197) gave the following results :—

Fuel : Brown coal briquettes.

Moisture content	= 15·07	per cent.
Ash	= 5·46	,,
Volatile matter	= 40·63	,,
Fixed carbon	= 38·84	,,
	100	per cent.

Net heating value B.T.U. per lb. = 8550 (4747 cals./kg.).

Gas Analysis.

	(1) Producer Gas. Lower Compartment.	(2) Retort Gas. Upper Compartment.	(3) Mixed Gases (after Tar Removal).
CO_2	4·9	11·4	7·7
CnHm	·1	·4	·2
CO	27·0	23·5	25·5
H_2	13·2	19·2	15·7
C_2H_6	..	1·2	·5
N_2	53·4	38·4	47·1
CH_4	1·4	5·9	3·3
Net B.T.U./cub. ft.	145·6	219	175·8

On the basis of the carbon balance method the gas yield was calculated to be 2·33 cub. m. per kg. coal as charged (2·74 cub. m./kg. T.D. fuel).

From the gas analyses it was calculated that 0·99 cub. m. per kg. or 42·5 per cent of total gas was removed at the retort top, and 1·34 cub. m. per kg. or 57·5 per cent of total gas was removed at the retort base; and that of the producer gas made in the lower part 65·5 per cent is directly removed, and 34·5 per cent is passed through the retort.

Note.—Such calculations can only be of theoretical value, since it is impossible to say how far the gas from the lower part is altered in composition in its passage through the fuel layers in the retort.

J. f. Gasb., September 4, 1920.

Tar (undehydrated):
Yield 8·81 per cent by weight of wet tar.
Heating value 6788 cals./kg. (12,200 B.T.U./lb.).
Carbon content, 62·5 per cent.

Thermal balance in per cent on heat in coal charged:

Heat in cold gas	= 77·4 per cent	90 per cent tar and gas efficiency.
,, in tar	= 12·56 ,,	
,, lost in ashes	= 1 ,,	
,, lost in hot gases	= 2·59 * ,,	
,, unaccounted for	= 6·45 ,,	

* The heat lost by the gas as sensible heat seems very low, since over 40 per cent of the total gas is cooled to atmospheric before being mixed with the hot producer gas from the lower part.

Fig. 198 shows the type of producer developed by A.-G. f. Brennstoff-Vergasung for using coal of a more caking type. The system is an adaptation of the Linck pre-distillation chamber described in reference to fig. 193 in so far as the retort base is revolvable and provided with fuel-distributing chutes and coal-sweeping fingers.

Fig. 199 shows the Allgemeine Vergasunggesellschaft's retort producer for gasifying raw brown coal lumps;[1] an arrangement drawing of a complete gas plant is shown in fig. 299. The typical difference between this producer and the two previously described types is that the *whole* of the gas is taken through the retort, and that the latter consists of an unlined steel shell.

Both of these differences are, however, typical of the treatment of wet brown coal, but it is clear that for most other fuels one would either find the throughput too small or the retort would burn out or collapse at the base.

To obtain not only gas of a high calorific value but also a large quantity of tar from moist fuels of this type, it has been found advantageous to dry these, before introduction into the producer, to a moisture content of 25 to 35 per cent. The reason given as an explanation as to why the tar yield is higher on previously dried material than on wet is that the wet material will lower the temperature in the combustion zone and itself become scorched, on account of the fact that more carbon must be burnt in the lower part (to evaporate the moisture), thus causing a higher temperature at the base. Whether this be the exact cause or not, it is certain that some tar vapours begin to condense out at temperatures above 100° C. (the exact temperature varying with the fuel nature), so that a column of very wet material may serve as a fractionating medium for the hot gases containing the tar given off from the fuel at 300° to 450° C., thereby causing partial condensation of tar which may run into the lower hot zones, to be cracked in these into permanent gases or very light oils and carbon.

In so far as the control of the operation of a tar recovery producer using moist fuels is concerned, we may perhaps draw the conclusion that the less moisture the

[1] Arnemann, G. and W. F., October 8, 1921.

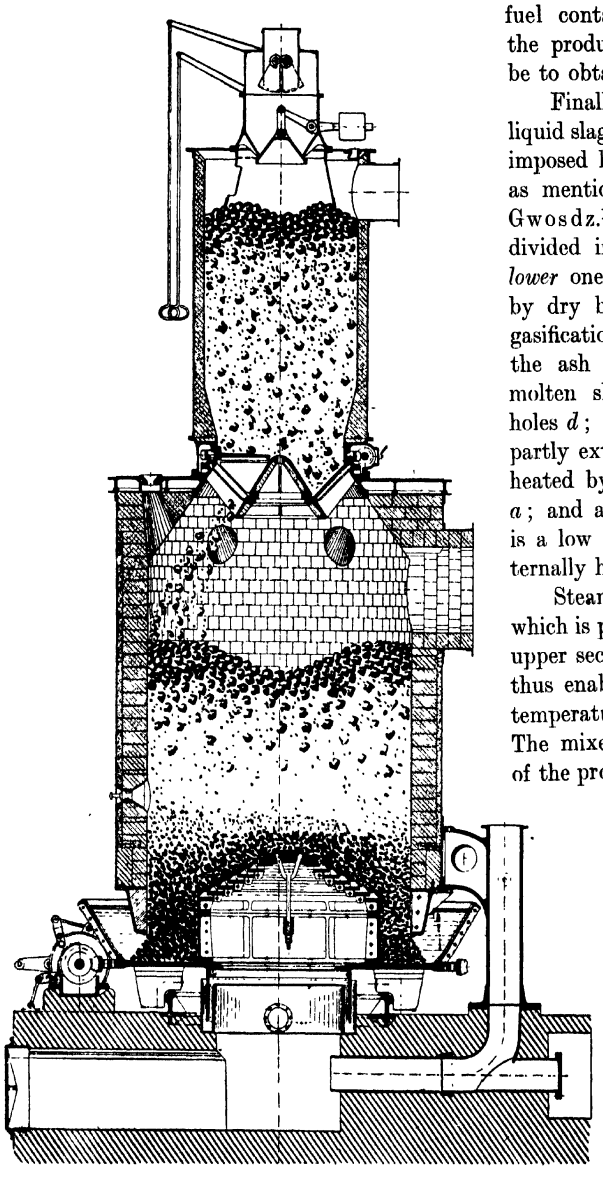

FIG. 198.—A.-G. F. BRENNSTOFF-VERGASUNG PRE-DISTILLATION RETORT WITH MECHANICAL DISCHARGE.

fuel contains as charged into the producer, the easier will it be to obtain a good tar yield.

Finally, fig. 200 shows a liquid slag producer with superimposed low temperature retort as mentioned by Fischer and Gwosdz.[1] The producer is divided into three sections: a *lower* one *a*, which is operated by dry blast, and at a higher gasification rate, so as to enable the ash to be removed as a molten slag through the tap holes *d*; a *middle* one, which is partly externally and internally heated by the hot gas made in *a*; and an *upper* one *b*, which is a low temperature retort internally heated only.

Steam is added to the gas which is passed through the two upper sections of the producer, thus enabling a reasonably low temperature to be obtained. The mixed gas leaving the top of the producer is said to have a temperature of 150° C., and is treated for both tar and ammonia recovery in a separate cleaning plant.

Concerning the advantages or disadvantages of either of the two types of tar-producing means, viz. the external and the internal retorts, we can do no better than quote the summary statement made by Trenkler[2]:—

[1] *Kraftgas*, 1921, Spamer, Leipzig.

[2] *Z. f. V.D.I.*, October 27, 1920.

(1) The external retort is cheaper to make, as it is of smaller diameter than the producer shell and consists of a plain casing and lining.

(2) The internal retorts are more expensive in first cost and (if mechanical) more expensive in repairs and upkeep.

(3) For existing plants the internal retort will be found the most economical to install, since it does not involve the removal of, or considerable alterations to, the coal-handling and storage plant.

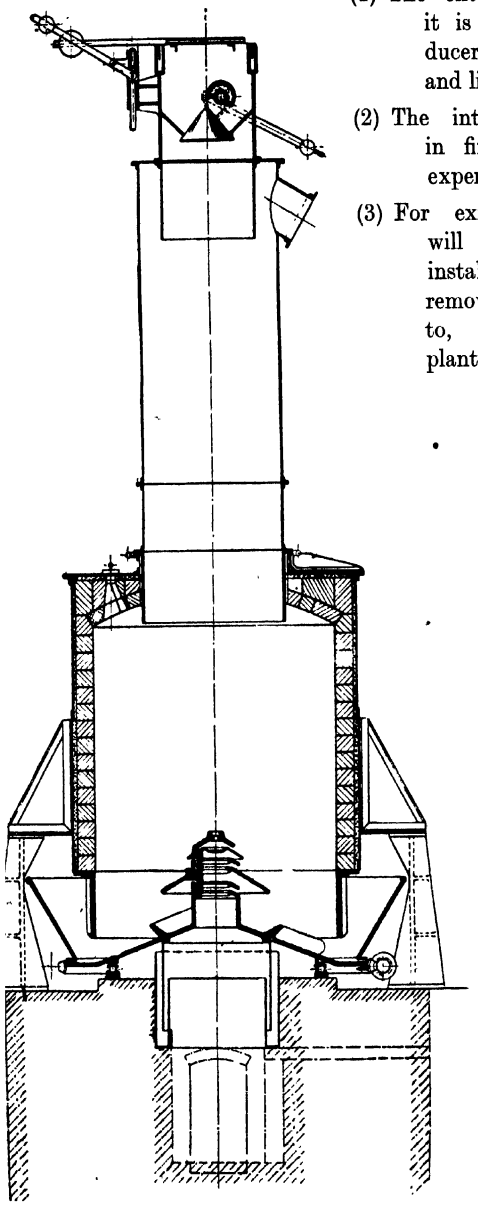

FIG. 199.—ALL. VERGASUNGSGES. LOW TEMPERATURE PRODUCER FOR MOIST BROWN COAL.

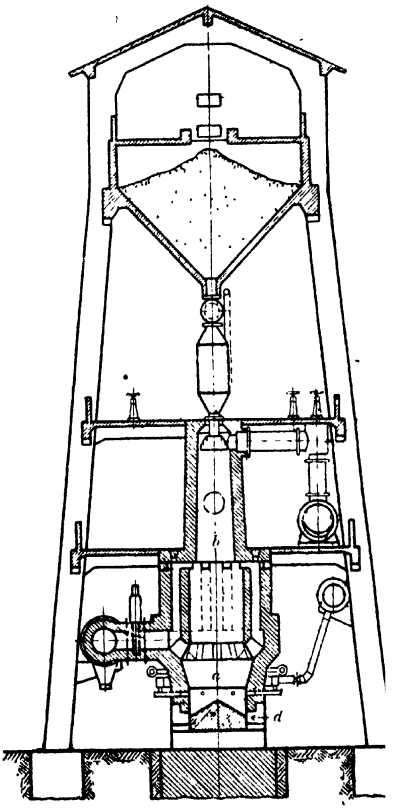

FIG. 200.—LIQUID SLAG PRODUCER WITH ARRANGEMENT FOR RECOVERY OF LOW TEMPERATURE

(4) The external retort will cause the producer to have a lower throughput; nor is adjustment during operation as easily achieved, while the tar yield is likely to be less.

(5) Speaking generally, the external retorts are in place for fuels that are easy to gasify, especially brown coal briquettes; while for ordinary coals the internal mechanical retort is more suitable.

In connection with the thermal requirements of fuel distillation by the sensible heat of part of the hot producer gases, the following rough and more or less theoretical calculations will give a practical guide as to what may reasonably be expected when dealing with—

A. A good-class bituminous coal (net cals./kg., T.D. subst. = 7000).
B. Brown coal briquettes (,, ,, = 5500).
C. A low grade peat (,, ,, = 4000).

	A.	B.	C.
Moisture content of fuel	3 per cent	15 per cent	30 per cent
Grammes of moisture per kg. of T.D. fuel	31	177	430
Specific heat of dry fuel	·3	·3	·3
Temperature to which fuel must be heated before tar evolution completed, say	550° C.	500° C.	450° C.
Yield of gas in cub. m. per kg. T.D. fuel, say	4·5	3·5	2·5
Assumed gas inlet temperature to retort	700° C.	600° C.	600° C.
Assumed gas outlet temperature from retort	150° C.	100° C.	100° C.
Temperature range of gas	550° C.	500° C.	500° C.
Heat that can be abstracted per cub. m. gas (av. spec. heat = 0·35)	192 cals.	175 cals.	175 cals.
Heat required per kg. moisture for heating up and evaporation	650 cals.	625 cals.	625 cals.
Temperature range for heating up of fuel in retort	535° C.	485° C.	435° C.
Heat required to evaporate moisture	20·2 cals.	110·5 cals.	269 cals.
Heat required to pre-heat fuel	160·5	145·5	130·5
"Total" heat for distilling fuel	182·7	256·0	399·5
Cub. m. of gas required for this purpose	0·95	1·46	2·26
Per cent of total gas	21·1	41·7	90·5

This calculation does not take into account that most fuels, especially those of younger formation (such as peat or lignite), generally have an exothermal distillation reaction, but, on the other hand, the assumed total gas made from the fuel (of 4·5, 3·5, and 2·5 cub. m. per kg. respectively) includes the distillation gas, and is therefore not all available for distillation.

From the above we may draw the following rough conclusions :—

For fuels containing less than 5 per cent moisture about 25 per cent of total gas must go through the retort.

For fuels containing about 10 to 20 per cent moisture between one-third to a half of total gas must go through retort.

For fuels containing 25 to 35 per cent moisture all the gas must go through the retort.

Before leaving the subject of by-product recovery gas producers it may be useful to attempt to forecast the possible future requirements of the industry for plants of this type.

Since the establishment of technically sound and technically successful processes is now beyond doubt, the question becomes entirely a commercial one, in so far as by-product producer plants will be installed where they become a paying proposition. The matter of the competition between solid fuel and gaseous fuel utilization being outside the scope of this treatise, what are then the competitive plants purely from a gas-producing and by-product point of view ?

Dealing first with the *gas production* processes, the one that will produce the cheapest gaseous form of heat is the producer gas process, consequently the main competitor of the recovery gas plant will be the non-recovery gas producer plant.

The latter will always be the most economical for fuels low in their content of volatile matter and nitrogen, also for smaller units of plant where simplicity and ease of operation are the main factors.

Of the remaining types of gas producer plants we have, then, those which are of a reasonable capacity and using fuels which will yield a reasonable quantity of by-products upon gasification.

Such plants may again be subdivided according to whether the gas is to be supplied for use either hot or cold.

If the gas is to be supplied in a *cold* state it is clear that so long as the over-all thermal efficiency (that is, including the heat for steam raising) is no more than for the plant with by-product recovery, then it will pay to recover the by-products, which in such cases can be looked upon as additional gifts.

If the over-all thermal efficiency is less for the recovery type, then there are two points to consider :—

(*a*) Is the commercial value of all the by-products (less the extra working costs entailed by their recovery) likely to balance the extra fuel consumption ?

(*b*) Is the gas produced by the recovery process likely to give a better utilization efficiency than the non-recovery gas ?

(*a*) will have to be determined for each particular case, but concerning (*b*) the thermal intensity of a true low temperature producer gas is higher than that of any cold non-recovery producer gas hitherto produced on a continuously operated plant.

If the gas is to be supplied *hot*, then, as we have seen, it is possible to distil bituminous coal previous to entering the gas producer proper, the extra heat loss involved by which is not likely to exceed 2½ per cent of the total heat in the fuel,

so long as the heat in the recovered tar is not counted as a debit. It then practically becomes a question only to decide whether the extra cost of installation and working of the tar recovery plant will counterbalance the sales value of the low temperature tar.

For undertakings generally accustomed to use hot gas there is, however, a further alternative, viz. to see whether cold low temperature recovery gas might not be more advantageously utilized. Due to the special conditions governing its production this gas will always have a higher potential heating value than that of the hot gas; it further has the advantage of being easily piped in small mains from a central gas plant to any part of a large works. Its supply at the furnaces is more easily controlled, and the upkeep and week-end cleaning costs are entirely eliminated. The furnace plant engineer will have to carefully consider all such points and set them down as a possible credit, which, added to the extra value of the by-products, may counterbalance the loss of the sensible heat in the crude gas and leave a handsome *credit* in favour of the recovery gas.

In judging the value of the two by-products, ammonia and tar, it should not be forgotten—

(1) That the *ammonia* will have at least that value which represents its *cost of production* by any other process, be it a synthetic one or otherwise.

(2) That the *tar* will always have a higher value per *unit of heat* than the coal from which it is made, due to its ease of handling, storage, and higher thermal utilization efficiency in internal combustion engines or furnaces. Apart from this, its value may be still further enhanced when by chemical treatment it is possible to produce from it raw materials or products whose values are judged not by their heat content, but by their chemical and other properties.

Coming now to the consideration of the competitive plants from a *by-product production* point of view, the only plants that will produce *similar* by-products are those of the low temperature carbonization type.

From a thermal point of view the gas producer plants are considerably superior to these, in so far as for the hot gas producer recovery process the extra thermal loss involved by recovery is less than $2\frac{1}{2}$ per cent, while for the cold gas producers there is *no* loss. The losses by the low temperature distillation processes may be classified as follows :—

Heat required for evaporated moisture.
Heat contained in hot coke.
Heat by radiation, dust, and leakages.
Heat lost in spent heating gases (indirect heating); *or*
Heat lost in hot distillation gases (direct heating).

These losses vary for the various types of plant, but even for a good plant the thermal losses will be from 8 to 12 per cent of the heat in the fuel treated.

From a first-cost point of view the by-product gas producer plant is cheaper to install.

From a working-cost point of view every low temperature carbonization plant is dependent upon a good market being available for the smokeless coke fuel produced, which, unless briqueted, is difficult to handle and transport without a certain amount of crumbling taking place. The gas producer plant is only dependent upon the market for tar and ammonia products.

So far as concerns the use of non-caking or poor-grade or moist fuels it is clear that the gas-producing process is far ahead of the carbonization process, since the residue in the former is fully utilized from a heat point of view, while the residue from the latter may not have any high commercial value.

On the other hand, some low temperature carbonization processes deal efficiently with caking and dusty coals which are difficult to gasify successfully. Further, the low temperature carbonization process is generally not so dependent upon the fuel grading as are gas producer plants.

From the above it will be clear that although every process or plant has its own particular sphere, so far as the future is concerned there does not appear to be any doubt that gas producers in which the fuels are treated under low temperature conditions will find a secure place in industry.

(*J*) SPECIAL GAS PRODUCERS

The previously described gas producer details have covered the designs generally used in ordinary gas producer plant experience. Obviously one or more of the specific features of a certain design may be combined together to give that type which is likely to be the most efficient for a particular purpose.

There are, however, certain gas producer plants which either operate on different principles to those described, or which are specially designed to use certain particular fuels or adapted for making gas for certain specific purposes. Such will be described in this chapter under the following sub-headings :—

1. Tar destruction producers.
2. Vegetable and wood refuse producers.
3. Peat or lignite producers.
4. Dusty fuel producers.
5. Large gas producers.
6. Small gas producers.
7. Traction gas producers.
8. Marine gas producers.

1. Tar Destruction Producers

In the earlier years of producer gas power plants most installations in which bituminous coals were used were unsuccessful mainly because the knowledge and experience required to clean producer gas from tar was not sufficiently developed.

Such conditions no longer exist now that the tar obtained from bituminous coals can always be completely removed, and on medium-sized and large gas producer units where cold gas is required made a useful by-product. Nevertheless gas plants for bituminous fuels in which the tar is more or less successfully destroyed *inside* the producer continue to be installed, and probably with some justification in the case of smaller producer gas engine power plants.

Practically speaking, every producer type so far described has been of the up-draught type, that is, the flow of air and gas through the fuel bed has been in an upward direction, *i.e.* counter-current-wise to the flow of the fuel. From a thermal point of view this procedure is doubtless the right one, but obviously whatever tar may be evolved from the fuel will always pass through cooler zones, hence the tendency of an up-draught producer is to conserve the tar.

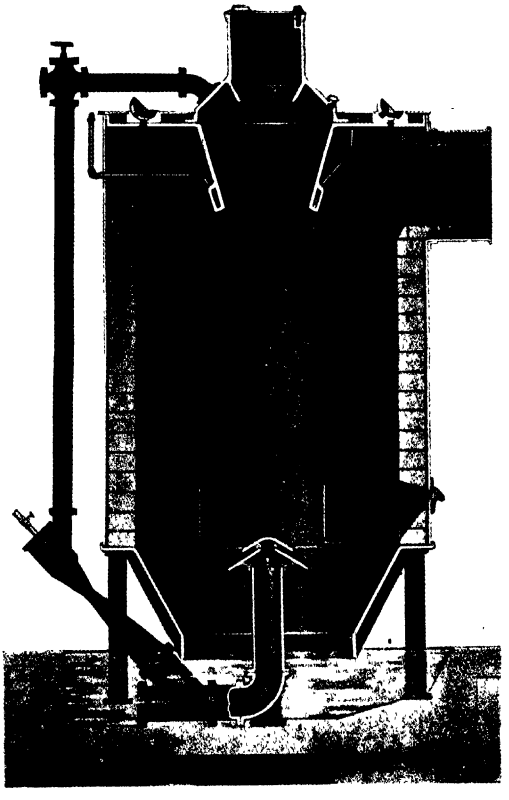

FIG. 201.—SYRACUSE PRODUCER WITH ARRANGEMENT FOR BURNING GREEN GASES.

To prevent this, the designs of tar destruction producers are all based upon passing the distillation products of the fuel through the hotter zones of the fuel bed, before removal from the producer. *Down-draught* and double-draught (or *double-zone*) producers come within this classification, as do also arrangements for burning "*green gases.*"

Fig. 201 shows the Syracuse (U.S.A.) bituminous producer in which the distillation gases and tar vapours ("green gas") generated inside the fuel bell are ejected (with some of the producer gas) and injected with the air and steam blast into the lower incandescent zones of an up-draught producer; by this method the tar vapours and other distillation products are decomposed into the permanent gases, CO_2, CO, and H_2.

When producers of somewhat similar types were put to work or experimented with in this country about fifteen years ago, serious operation difficulties were found

due to tar blockages of green gas pipes, clinkering of grate bars, while gas of a low heating value was obtained, all of which resulted in the complete abandonment in England of burning " green " gases under the grate.

Nevertheless, for some of the American fuels, which contain a reasonably low amount of volatile matter (and therefore probably less tar and distillation gas than English bituminous gas producer coals), it does not appear unlikely that the arrangement shown may work satisfactorily.

Fig. 202 shows the Pintsch suction gas producer for bituminous coal. It consists of two compartments, an upper large distillation chamber A and a lower gas-producing chamber H. Part of the producer gas from H is passed through the fuel in A, while the main gas quantity passes round the annular space B, is collected in the channel D, and leaves the producer at F, thus indirectly heating the fuel in the retort A; the sensible heat of the hot producer gas leaving the producer is further utilized for steam raising. The gas passing through the retort, together with the distillation gases, tar vapours, and moisture, is removed in two pipes G, and blown by two independent jet blowers J into the hearth C, where (mixed with the air sucked in from the atmosphere) it passes up through the incandescent fuel bed in H, in which the tar is completely split up into gas.

From the theoretical calculations put forward in the table on p. 310 it will be realized that the quantity of gas which is to be drawn through the retort and returned to the fire may be a considerable amount of the total; further, that by burning the tar extra heat will be generated in the ash zone, which, with certain fuels, may cause clinker formation. Both of these factors would appear to indicate that the sectional area of the lower compartment of the producer will have to be ample.

Using a suitable bituminous fuel, a producer of internal diameter of 900 mm. (about 3′) will generate 320 cub. m. (11,200 cub. ft.) of producer gas per hour, having a heating value of about 975 cals. per cub. m. (109 B.T.U. per cub. ft.), the gasification efficiency being 65 to 70 per cent in accordance with the fuel used.

The average analysis of several gas samples taken on a plant using a bituminous coal of 7250 cals./kg. (13,050 B.T.U./lb.) heating value was—

CO_2	8·6	per cent.
CO	18·3	,,
H_2	14·0	,,
CH_4	·6	,,
N_2	58·5	,,

Net B.T.U./cub. ft. = 108·9.

It will be seen that the gas is typical in its lack of CH_4, and that it has a calorific value in no wise as good as that made in an up-draught plant from coke or anthracite.

When we bear in mind that the tar also in this plant is converted into gas and yet the efficiency is no higher than 65 to 70 per cent, that is, less than that of a

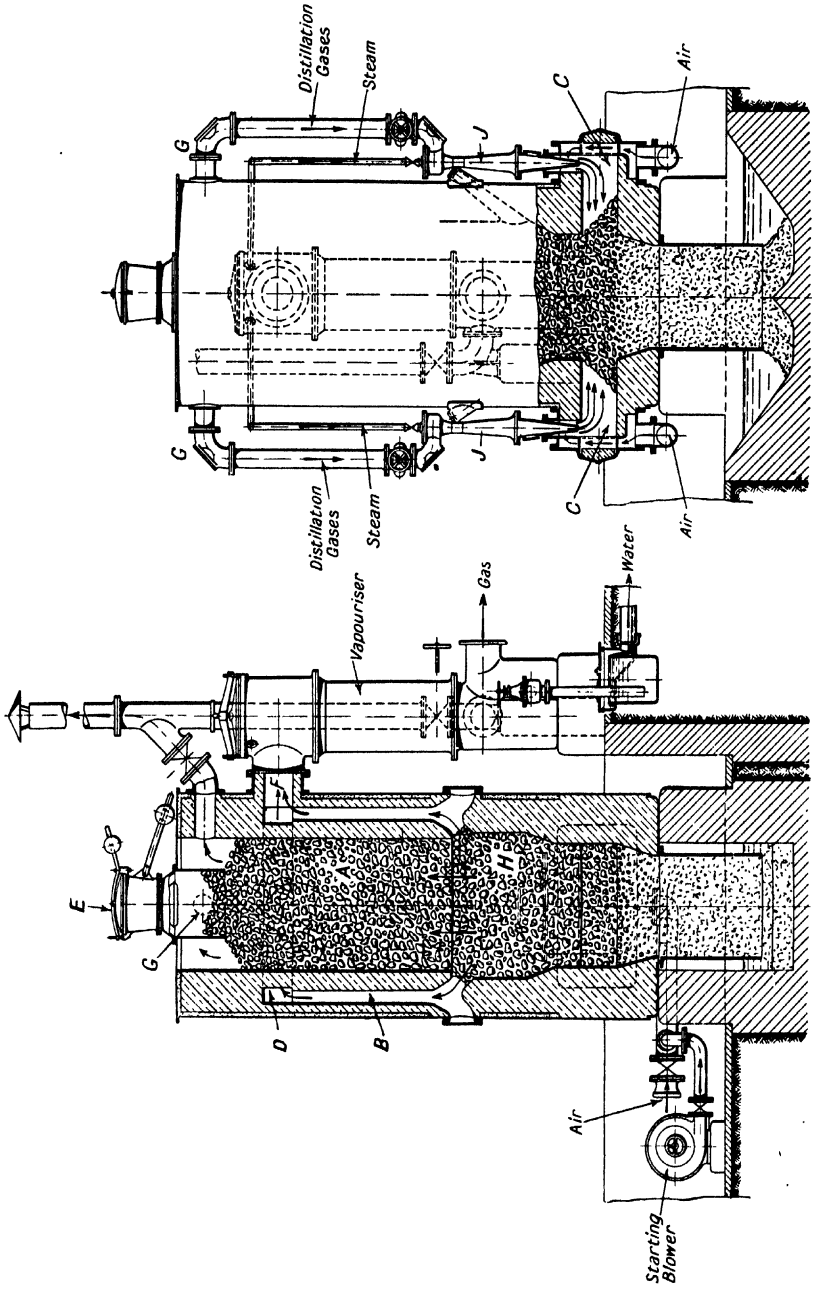

FIG. 202.—PINTSCH PRODUCER WITH ARRANGEMENT FOR BURNING GREEN GASES.

bituminous plant in which the tar is *condensed* out from the gas, we at once realize the weak point of not only this particular tar destruction producer but practically all producers of this class.

In the author's opinion the main reason for this decrease in thermal efficiency and in gas-heating value is the high gas outlet temperature which the gases are likely to possess and their large volume per unit weight of fuel.

On p. 212 we described the Cambridge log wood producer (fig. 114), which is of the *down-draught* type, that is, the whole of the gas leaves the gas producer at the grate bars, thus forcing not only the tarry vapours but also the charcoal producer gas through the hottest parts of the fuel bed, immediately previous to leaving the producer.

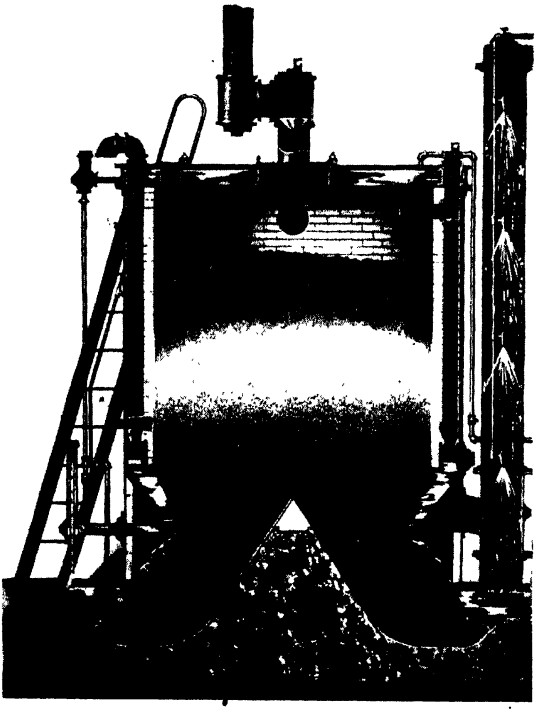

FIG 203.—AKERLUND DOWN-DRAUGHT PRODUCER.

In fig. 203 is shown an American down-draught producer, the Akerlund type. The producer steel shell is suspended in a water lute through which ashes are removed in the ordinary way, their removal being facilitated by the provision of a central steel-cased concrete cone. From the lower end of the producer casing is suspended a steam vaporizer, the inside of which is in contact with the fuel bed, while the outside is heated by the hot producer gas previous to its removal to the gas-cooling plant.

Fuel is charged through doors at the top, not necessarily double-valved hoppers, since in any case only air and steam exist in the space above the fuel bed.

The air is sucked in through a pipe embedded in the brickwork, and passed over the top of the vaporizer before being admitted through another pipe in the brickwork to the top of the fuel, from whence it is sucked down through the fire and converted into gas in the incandescent zones, in which any tar vapours are also destroyed.

When starting up a producer of this type the lower zone is made hot by working

the producer on the up-draught principle, until the fuel bed is in a state to enable tar-free gas-making to proceed in the ordinary way.

Poking of the fuel bed from side and top and removal of ashes take place in the same way as on an up-draught producer.

A typical gas analysis from the producer when using bituminous run of mine coal is given as—

CO_2 . . .	9·8 per cent.
O_2 . . .	·3 ,,
CO . . .	18·6 ,,
H_2 . . .	12·9 ,,
CH_4 . . .	1·6 ,,
N_2 . . .	56·8 ,,

Net B.T.U./cub. ft. (N.T.P.) = 116·3.

A series of investigations[1] on various producer gas plants at work in U.S.A. were conducted in 1914–1915 by the Bureau of Mines. From the particular bulletin the following figures referring to average operating details of a considerable number of bituminous up-draught or down-draught producers have been obtained:—

		Up-draught.	Down-draught.
Average heating value of gas, B.T.U./cub. ft.	Bureau of Mines .	152	110
	Commercial plants	151	123
Maximum heating value of gas, B.T.U./cub. ft.	Bureau of Mines .	176	123
	Commercial plants	175	130
Gas production in cub. ft. per lb. in Bureau of Mines testing station		65	68
Rates of gasification in lbs. of dry coal per sq. ft. of fuel bed area and hour	Average . . .	8	16·5
	Maximum . .	13	22
Power for auxiliary machines (average of 8 plants), in per cent on plant capacity	Installed. . .	5·3	3·3
	Actually consumed	5·0	3·8

Although from this summary it is clear that the American down-draught producers are working under comparatively high rates of gasification (these are normal for most European fuels), we again notice that the heating value of the gas is considerably less than that of the up-draught type. Since this decrease in heating

[1] Fernald, "Operating Details of Gas Producers," *Bull.* 109, Bureau of Mines.

value does not appear to be counterbalanced by an increased gas production, we may conclude that the thermal efficiency is lower than for the up-draught type, due probably to higher gas outlet temperatures.

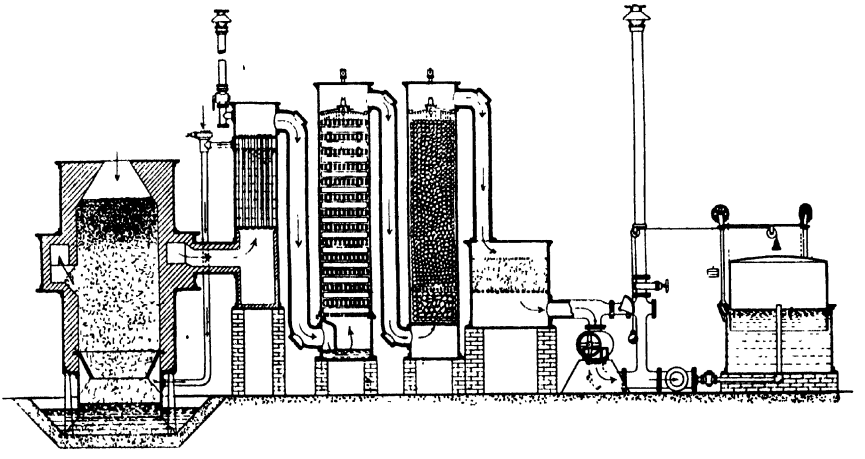

Fig. 204.—Dowson Double-zone Bituminous Suction Plant.

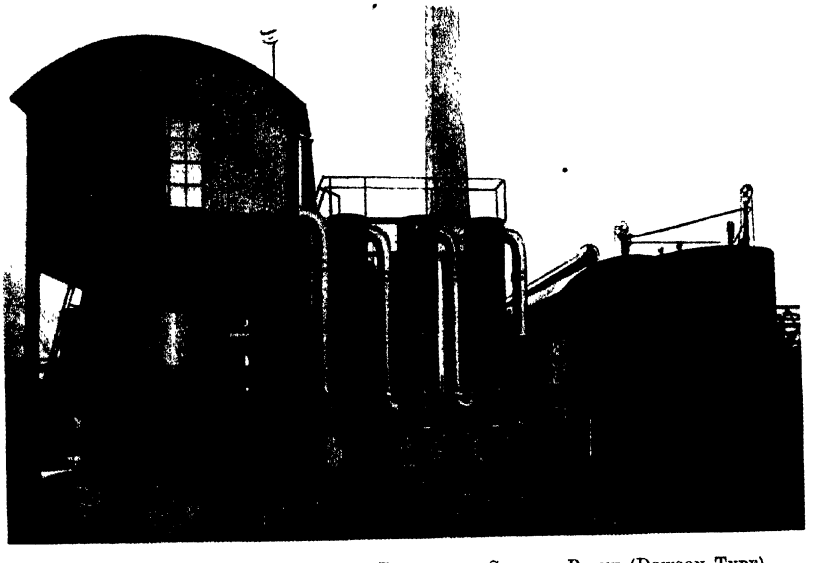

Fig. 205.—800 B.H.P. Double-zone Bituminous Suction Plant (Dowson Type).

Fig. 204 shows the Dowson bituminous suction producer which Messrs. Dowso

& Mason manufacture in sizes from 100 to 800 B.H.P. A photograph of an 800 B.H.P. plant (consisting of two units) working on Scotch coals is shown in fig. 205.

This producer is of the *double-zone* or double-draught type, in so far as the flow of gas through the upper fuel layers is in a downward direction and through the lower fuel layers in an upward direction, the resulting gas being withdrawn from an annular gas-collecting chamber placed about half-way up the producer casing.

The producer is open at the top, and coal is put in there as in a down-draught type of plant. The upper part of the fuel bed burning downwards causes the volatile matters to be driven off, and these are passed through the upper part of the incandescent fuel bed of the lower up-draught coke producer, thus causing a decomposition of the tarry compounds. The mixed gases pass through a tubular steam boiler before entering the gas cooling and cleaning plant.

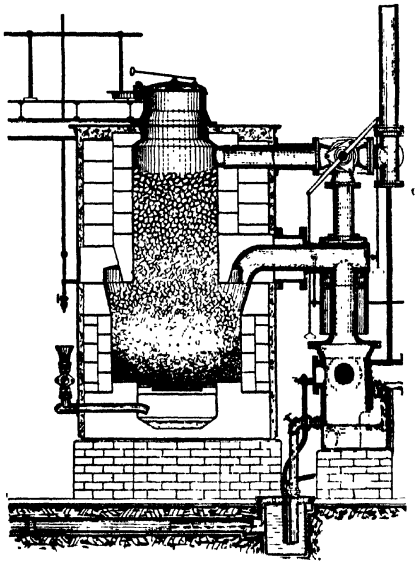

Fig. 206.—Pintsch Static Double-zone Suction Producer for Brown Coal, Peat, or Wood.

It is claimed that almost any kind of coal can be used which does not contain more than 30 to 35 per cent of volatile matter; also that with a fairly good quality of fuel of $\frac{1}{2}''$ to $1''$ grading the fuel consumption per B.H.P. hour at full load in a good gas engine is only a little over 1 lb. The decomposition of the tar in the producer is so complete that it is often unnecessary to use a mechanical tar extractor for cleaning the gas finally.

An eight-hour test made on a plant of this type using bituminous coal showed that the gas had the following average gas composition :—

CO_2	4·6	per cent.
CO	23·8	,,
H_2	11·1	,,
CH_4	2·2	,,
N_2	58·2	,,

Net B.T.U. cub. ft. (N.T.P.) = 134·6.

Fig. 206 shows the Pintsch type of double-zone suction gas producer, the main difference in the design from the previously described type being that the air for the top zone is slightly pre-heated before entry and that no vaporizer is provided.

According to makers' statement, the producer is unsuitable for using bituminous coals, since the temperature in the "tar cracking" zone is generally not high enough

to ensure complete destruction of the tars, thus causing a more or less tarry gas, rich in soot, to be obtained. They, however, recommend the use of highly volatile "younger" fuels, such as brown coal lumps or briquettes, as well as peat and wood, as suitable for gasification in this producer; the thermal efficiencies and gas-heating values obtained from these fuels when so gasified being as follows :—

Fuel.	Average Heating Value of Fuel as charged, B.T.U./lb.	Thermal Efficiency.	Net Heating Value of Gas in B.T.U./cub. ft.
Brown coal	6300-9000	50-70	112
Brown coal briquettes . . .	7700-9000	70-75	123 to 135
Peat	5400-6300	50-70	100 ,, 112
Wood	5400-8100	50-65	100 ,, 112

Using brown coal briquettes of, say, 8500 B.T.U. per lb. heating value as a fuel, a 3′ internal diameter producer will supply a 150 B.H.P. gas engine; at 72·5 per cent gasification efficiency of 8000 B.T.U. this is equivalent to a gasification rate of 36·6 lbs. per sq. ft. and hour.

Producers of this type are built up to very large dimensions; if desired, sizes above 5′ internal diameter are arranged to be fitted with mechanical grates. A special advantage in the employment of mechanical grates is said to be that, due to the ashes being removed continuously and regularly, there is not the same tendency to displace the "tar-cracking" zone as with a hand-ashed producer.

Fig. 163 illustrates the Westinghouse double-zone bituminous gas producer, while fig. 207 shows a photograph of an actual installation at work in the U.S.A. The principle of operation of this producer is the same as the previously described double-zone producers.

FIG. 207.—WESTINGHOUSE DOUBLE-ZONE GAS PRODUCER.

The following figures represent a test made on this plant :—

	Pocahontas Semi-bituminous Coal.	Texas Lignite.
Fuel :		
Moisture	1·39 per cent	23·83 per cent
Vol. matter	16·01 ,,	38·32 ,,
Fixed carbon	74·28 ,,	29·22 ,,
Ash	8·32 ,,	8·63 ,,
B.T.U. per lb. as fired	13,983	8,007
Thermal efficiency	74·5 per cent	70·5 per cent
Gas Analysis :		
CO_2	7·9 per cent	12·4 per cent
O_2	·5 ,,	·9 ,,
CO	18·1 ,,	13·3 ,,
H_2	12·6 ,,	14·7 ,,
*CH_4	2·6 ,,	3·6 ,,
N_2	58·3 ,,	55·1 ,,
Net B.T.U./cub. ft. (N.T.P.)	123·3	122·5

* *Note.*—If the gas contained such a high percentage of CH_4, it is not likely that it would be completely free from tar on leaving the producer, but perhaps the high CH_4 content is due to incomplete absorption of CO when analysing the gas.

Very extensive trials have been made on this producer by the Department of Mines, Canada,[1] during the years 1913–1917, with most varying qualities of fuels, viz. :—

		Average.
Heating value B.T.U./lb. of fuel as charged	7360 to 12,750	10,230
Moisture content per cent of fuel as charged	1·9 ,, 25 per cent	10·4
Ash ,, ,, ,, ,,	6·5 ,, 18·1 ,,	11·8

the gasification results from which varied as follows :—

		Average.
Steam used per lb. of fuel	0·02 to 0·93 lbs.	·3 lbs.
CO_2 in gas per cent	6·6 ,, 12·8	10·0
CO ,, ,,	10·6 ,, 18·6	15·1
H_2 ,, ,,	8·9 ,, 19·0	13·4
Net calorific value of gas : B.T.U./cub. ft. N.T.P.	= 78·6 ,, 127·6	104·3
Tar in crude gas : Grammes per 1000 cub. ft.	= 3·5 ,, 36	14·1

[1] *Bull.* No. 13, "Gas Producer Trials with Alberta Coals," Blizard and Malloch.

In the conclusion come to regarding the tests the following is stated :—

"The combustion on the down-draft principle in the upper zone has many drawbacks, and should only be used when it is not feasible to employ an up-draft producer requiring an elaborate external plant for removing the tar from the gas. Better results are generally to be expected with the simpler up-draft single zone producer ; and a fuel unsuited to the double-zone producer may often prove entirely suitable for use in the simpler up-draft producer."

The main difficulties experienced were caking in the upper zone and clinkering at periods when insufficient steam was available from the vaporizer.

The tar content in the crude gas, as will be seen, is on the average 0·5 grammes per cub. m., which cannot be said to be excessive ; it varied, however, considerably for some of the fuels, being generally very high at the commencement of the trials and gradually decreasing as the test proceeded.

Just as in the case of the other tar destruction producers, the calorific value of the gas is very low ; such gas, although suitable for gas engine work, would not give a very high furnace utilization efficiency.

2. Producers for gasifying Wood Waste and other Vegetable Refuse

On p. 210 it was pointed out that the volume of vegetable refuse and wood waste per unit weight was much larger and its heating value very much smaller than that of bituminous coal. Furthermore, fuels of this type generally have a high moisture content and are sometimes of small grading.

Each type of vegetable waste will have different properties, and consequently the design of the producer is best made special to the particular fuel to be employed, or to meet with the specific requirements of each of the various fuels that such a producer may have to deal with.

To take care of the low specific weight and low heating value of these fuels it is necessary (for the same gas output) to increase both the diameter and fuel depth.

To ensure that the moisture content of the fuel is as far as possible evaporated by aid of the sensible heat of the hot gases from the lower part the fuel depth provided for must be large.

To avoid loss by carrying away smaller particles of fuel (say, sawdust) mechanically by the gas current, the top sectional area of the producer must be made large ; which precaution is also necessary to avoid undue pressure loss with a finely graded fuel.

On the other hand, the usual difficulties encountered in the gasification of bituminous coal, such as caking and clinkering, are absent, except perhaps in certain cases where the vegetable refuse contains ash derived from foreign bodies, which may cause some formation of clinker. A large number of wood waste and clean refuse plants are at work in which no steam at all is added to the air used for gasification.

Generally speaking, we may say that so long as the particular properties of the fuel as mentioned above are taken into consideration, wood waste and clean

vegetable refuse may be counted among the raw products which are most suitable for producer gas manufacture.

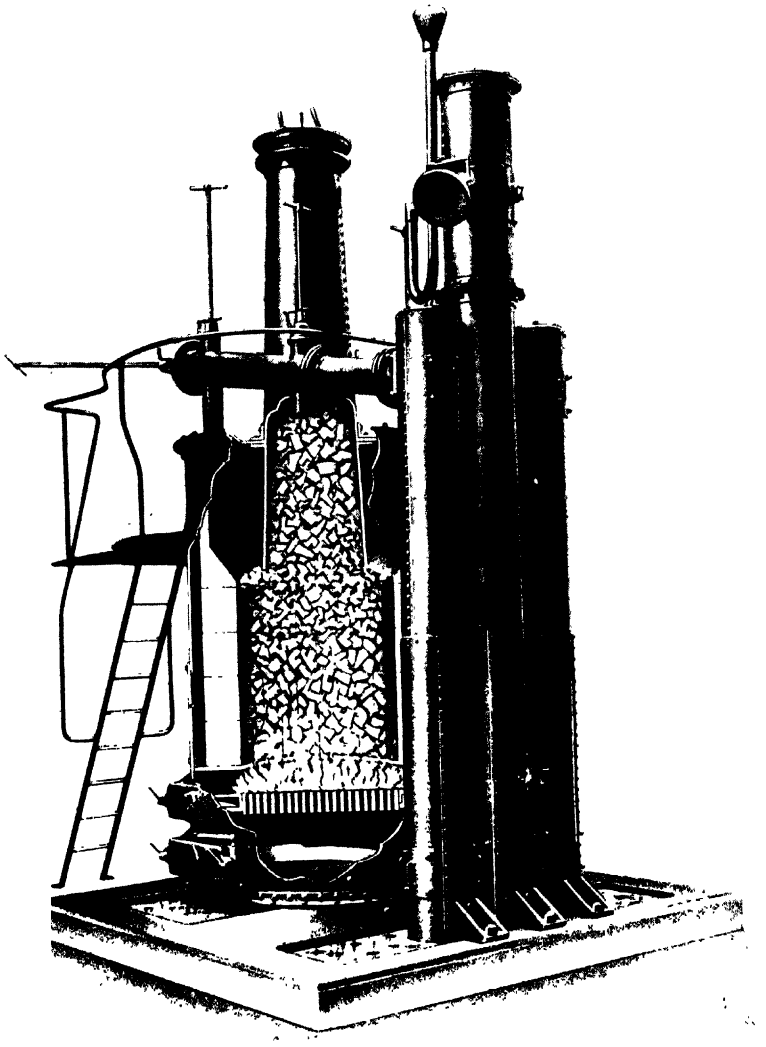

FIG. 208.—RUSTON REFUSE GAS PRODUCER (SAWMILL REFUSE).

Practically any refuse or waste of vegetable origin has been used successfully in gas producers, the following list being an example only of a few applications :—

Bark (wood).
Blocks (wood).
Chippings (wood).
Cocoanut-shells and husks.
Cork dust.
Cotton sticks, pods, seeds.
Dung and dry animal manure.
Fruit stones.
Grass (dry).
Leaves (dry).
Nut shells.
Olive refuse.
Paddy husks or rice husks.
Sawdust.
Sawmill refuse.
Seed husks.
Straw.
Sugar works' refuse.
Tannery refuse.
Tea prunings.
Twigs.
Wine scum (dry).

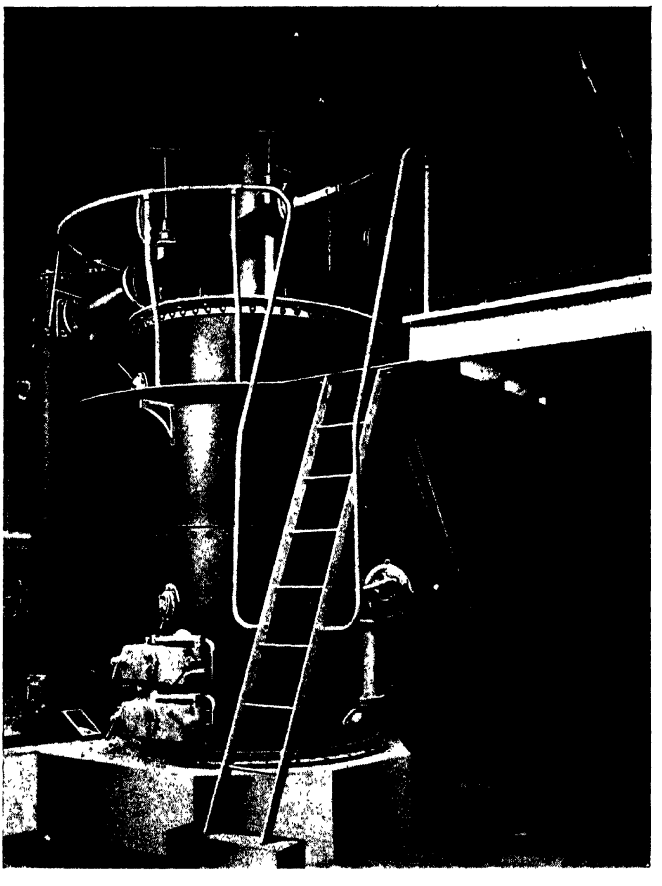

FIG. 209.—RUSTON REFUSE GAS PRODUCER.

The gas producer plant for these fuels obviously becomes more expensive per unit of heat contained in the cleaned producer gas than for fuels such as anthracite and coal, but since waste and refuse materials generally have a very low commercial value the extra capital outlay required for the gas producer plant will be quickly repaid by the decreased working costs.

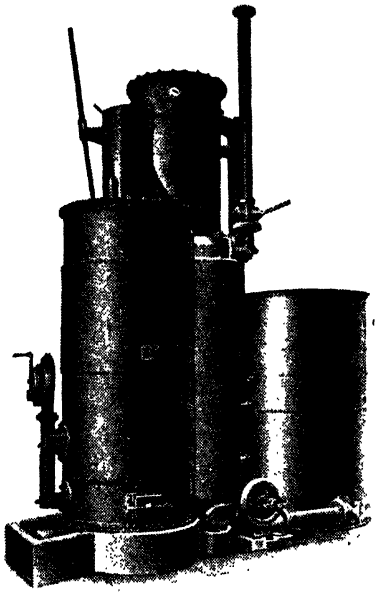

FIG 210.—POWER GAS CORPORATION WASTE WOOD PRODUCER (AEROPLANE SHOP REFUSE).

Figs. 208 and 209 show a waste wood suction gas producer built by Messrs. Ruston & Hornsby.

It is of the flat grate type and provided with a central fuel-feeding bell of such a depth that, besides eliminating too frequent charging, its contents serve as the second valve of a hopper when fuel is fed in through the single charging cover on the top.

The specific feature of the Ruston design is that instead of removing the gas from the producer at one point a number of vertical gas outlet pipes are provided at the top plate, each pipe being provided with a scraping rod, thus enabling tar and dust deposits to be removed from pipes without interfering with the production and supply of gas. The gas from one or more of the vertical gas offtake pipes is conducted to the cleaning plant by inclined connecting pipes, each of which is provided with similar cleaning rods.

A typical gas analysis made on a Ruston waste wood plant is as follows :—

CO_2	8	per cent.
CO	24·1	,,
H_2	11·7	,,
CH_4	3·1	,,
O_2	0·3	,,
N	52·8	,,

Net B.T.U./cub. ft. (N.T.P.) = 146·8.

Fig. 210 shows the waste wood or wood refuse plant as built by the Power Gas Corporation, Ltd., typical of which is the large depth of the producer. When

gasifying mixed refuse from the joinery department of an aeroplane factory, the following snap gas analyses were obtained :—

	CO_2	CO	CH_4	H_2	N_2	Net B.T.U. cub. ft. (N.T.P.)
1 P.M.	11·4	21·6	3·0	16·0	48	149·0
2.30 ,,	11·2	20·6	3·0	16·8	48·4	147·9
4.0 ,,	11·2	19·6	3·5	15·2	49·5	144·5

Fig. 211 shows a producer supplied by Crossley Bros. for the gasification of rice husks. Except that a double-valved feeding hopper and a single inclined gas outlet pipe are provided, it does not differ much from the previously described types.

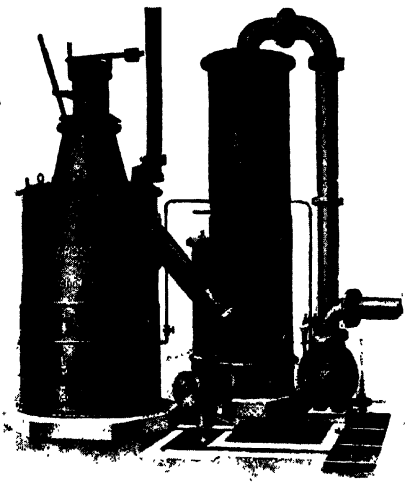

FIG. 211.—CROSSLEY BROTHERS, LTD., WASTE WOOD PRODUCER (RICE HUSKS).

Fig. 212 shows the Wells producer (see also fig. 115), such as used for driving an 8 B.H.P. locomobile. A large number of producers under the Wells system is said to have been working in Egypt during the war period, when cotton sticks, small wood, twigs, leaves, etc. were exclusively employed. Previous to introducing the sticks, twigs, etc., into the producer they were either cut or chopped up by machines similar to chaff cutters.

Fig. 213 shows a photograph of the Crossley spent tan producer, in which tannery works' refuse containing up to 50 per cent water has been gasified; it will be noticed that the producers are of considerable height, which is essential if fuels containing such an amount of moisture are to be dealt with.

The following gas analysis was obtained when spent tan of 56 per cent moisture was in use :—

CO_2 . . .	6·0 per cent.
O_2 . . .	0·6 ,,
CO . . .	27·0 ,,
CH_4 . . .	0·9 ,,
H_2 . . .	8·6 ,,

Net B.T.U./cub. ft. = 125·9.

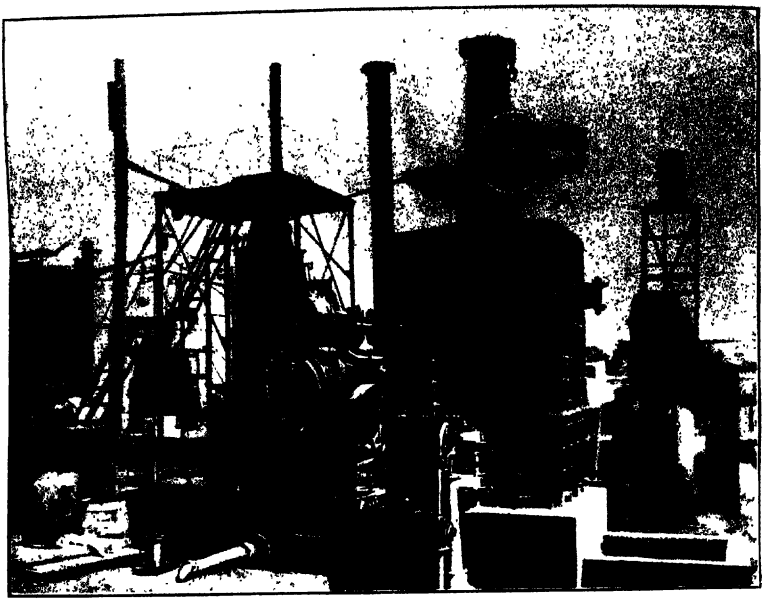

FIG. 212.—WELLS VEGETABLE REFUSE GAS PRODUCER.

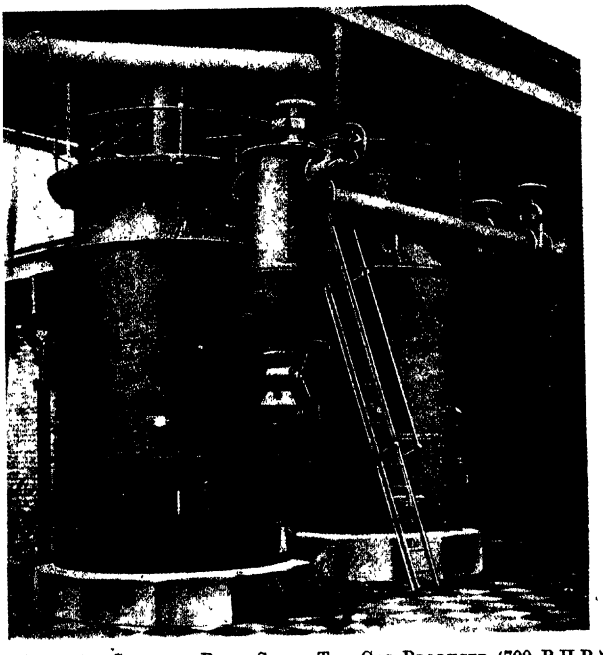

FIG. 213.—CROSSLEY BROS. SPENT TAN GAS PRODUCER (700 B.H.P.).

3. Producers for gasifying Peat and Lignite

Producer plants suitable for gasifying these fuels have already been partly described in reference to figs. 183, 184, 199, 202, and 206.

In many cases it is possible to burn peat or lignite efficiently in either a bituminous coal or a wood waste producer, depending upon whether the nature of these fuels is more similar to one or the other of the two types. Many makers thus put

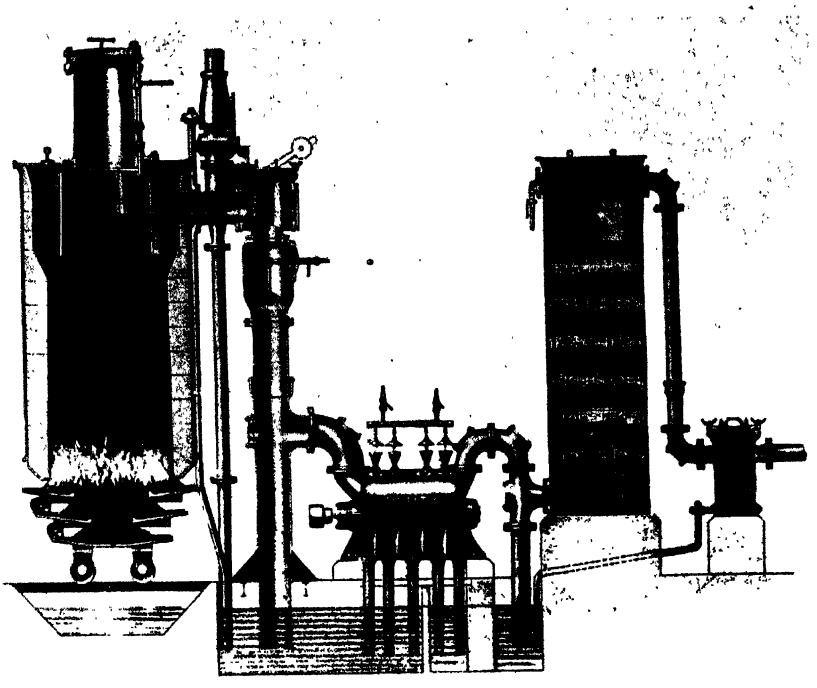

Fig. 214.—Deutz Peat and Brown Coal Gas Producer.

forward for peat or lignite a producer type which is a slight modification from their coal or their wood waste types.

The main points to be borne in mind when designing producers, especially for lignite and peat, are the moisture content and fusibility of the ashes, caking tendencies being entirely absent from these fuels. The moisture content determines the fuel depth, while ash fusibility determines the amount of steam to add to the air.

As regards the fuel grading, it will generally be found of advantage not to charge too great lumps to the producer. For instance, unless a very great fuel depth is provided for, peat sods are best broken up into smaller sizes, say 3″ maximum.

Fig. 214 shows the Deutz type of producer, such as is used for gasifying peat raw brown coal, and other moist fuels such as wood, sawmill refuse, etc. The

particular feature of this producer is to be found in the design of the grate which is mounted on wheels, so that it can be moved away from below the producer body, the latter being generally carried from the supports for the operating platform. Such an arrangement enables a quick emptying of the producer to take place, but in addition to this the two upper grate rings are mounted on ball races, so that they can be turned round by hand when required to facilitate removal of ash and clinker. (See also fig. 223.)

The following gasification results were obtained on a thirty-six-hour test on a plant of this type, using raw brown coal from the Rhenish deposits :—

Cross-sectional area of producer	= 0·26 sq. m. (2·8 sq. ft.).
Net heating value of moist brown coal	= 2190 cals./kg. (3940 B.T.U. per lb.).
Moisture content of moist brown coal	= 54·4 per cent.
Gasification rate (moist fuel)	= 1800 kg./24 hours.
,, ,, (T.D. fuel)	= 131 kg. per sq. m. and hour (26·5 lbs. per sq. ft.).
Steam used	= None.
Gas outlet temperature	= 75° C.
Carbon content in ashes	= 20·3 per cent.

Gas Analysis :	As made.	Excluding Air (in Gas).
CO_2	5·8 per cent.	7·0 per cent.
*O_2	3·5 ,,	Nil
CO	22·1 ,,	26·6 ,,
H_2	9·9 ,,	12·0 ,,
CH_4	1·5 ,,	1·8 ,,
N_2	57·2 ,,	52·6 ,,
Net B.T.U./cub. ft. (N.T.P.)	= 118·6	143·1

Gas yield : cub. m. (N.T.P.) per kg. fuel charged	1·38
Dry tar yield per cent on fuel charged	1·5

Fig. 215 shows a 400 B.H.P. Crossley peat gas producer plant such as is operating at Portadown, Ireland. The following operating results have been obtained on this plant :—

Typical Analysis of Peat.

Moisture	18·98 per cent.
Volatile matter	55·17 ,,
Fixed carbon	24·75 ,,
Ash	1·1 ,,
	100·0 ,,

* Many operators would consider an Oxygen content in the gas of 3·5 % too high for safe working.

When using peat containing 26 per cent moisture the average gas analysis during a ten-hour test was :—

CO_2 . . .	10·6 per cent.
CO . . .	21·0 ,,
H_2 . . .	13·0 ,,
CH_4 . . .	3·7 ,,
N_2 . . .	51·7 ,,

Net B.T.U./cub. ft. (N.T.P.) = 144·8.

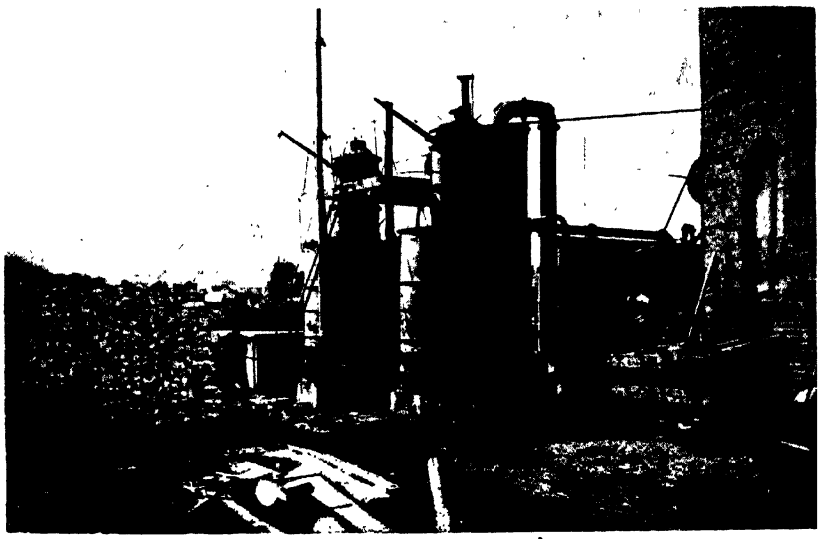

FIG. 215.—CROSSLEY BROS. 400 B.H.P PEAT PLANT.

Fig. 216 shows a photograph of a plant built by the Power Gas Corporation at work in Italy, which is arranged to gasify 30 tons of lignite per twenty-four hours. The producers are of the Mond type.

The following operating results have been obtained :—

Lignite Analysis.		*Gas Analysis.*	
Moisture content . .	= 35·5 per cent.	CO_2	18·4 per cent
Dry substance :		CO	12·4 ,,
Ash	31·0 ,,	H_2	22·0 ,,
Heating value . .	= 4200 cals./kg.	CH_4	4·6 ,,
	= 7600 B.T.U./lb.	Net B.T.U./cub. ft. (N.T.P.)	= 150·1

Fig. 217 shows a rotary gas producer lately put forward by Viele, Blackwell and Buck, U.S.A., which is said, with various special adaptations, to have been successfully at work on hard and soft sawdust, wood waste, fibrous peat, and slack lignite.

The whole apparatus rotates upon the riding rings, practically as does a cement kiln. The material to be gasified is supplied at the left through the conveyer and falls on the interior of the lining of the rotary drum. The gas flows off in the opposite direction. The fuel, due to the rotary action of the drum and also to the inclination, moves gradually to the right and is slowly heated and deprived of its volatile constituents, thus being gradually brought to the temperature of gasification in the

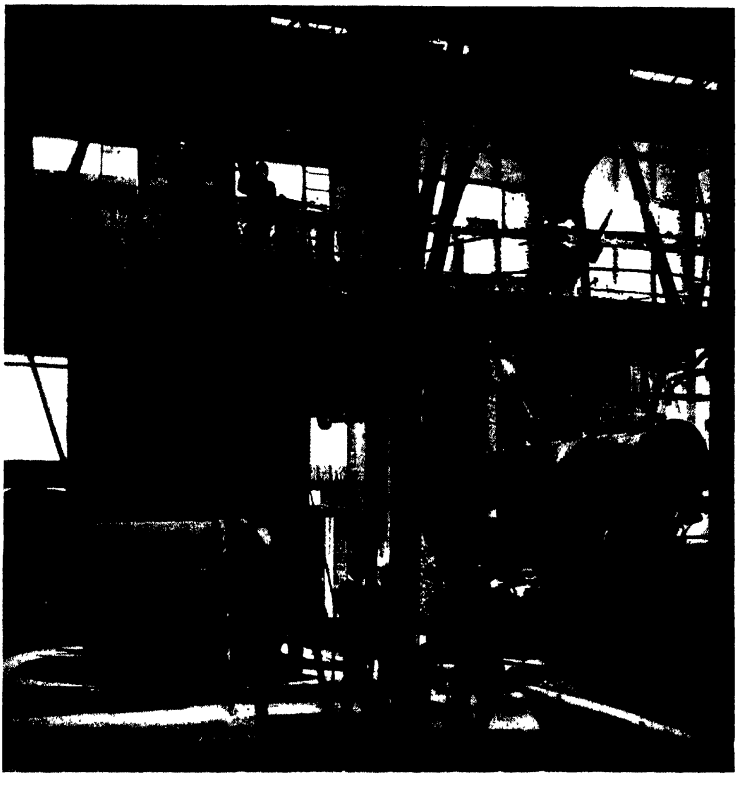

FIG. 216.—POWER GAS CORPORATION 30-TON LIGNITE PLANT.

active zone near the tuyère which is fixed, and is shown penetrating the rear wall at the right. Through the tuyère the air and steam, or in some cases CO_2, are admitted under considerable pressure.

The ash, after the carbon is burned out, is said to fuse into plastic masses which, due to their constant rotation, assume a spherical shape and are removed at intervals through the cleaning doors, four of which are provided on the rear wall of each machine.

A machine about 20′ long by 9′ in diameter will require about 6 B.H.P.; its

throughput capacity being said to be from 500 to 2500 lbs. per hour in accordance with the type of fuel available.

This producer shows such a radical departure from standard producer designs that for the time being it is perhaps best to await further developments before expressing a definite opinion as to its possible field of utilization.

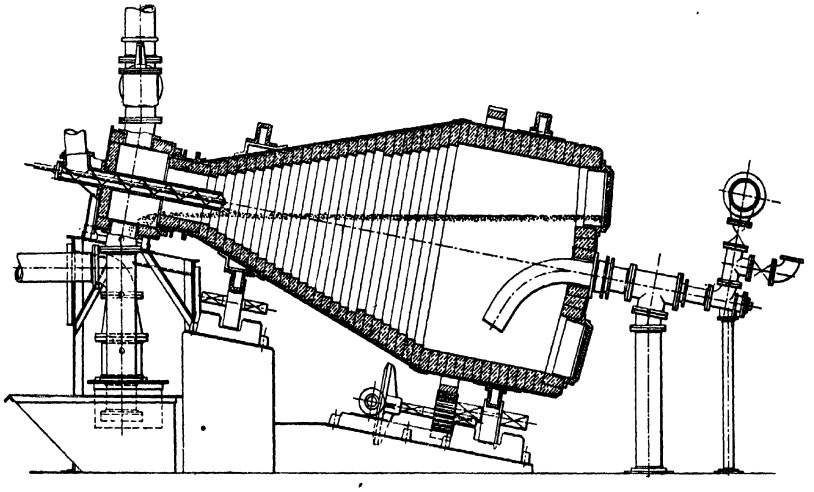

Fig. 217.—Viele, Blackwell, & Buck Rotary Producer for Waste Fuels.

4. Producers for gasifying Dusty Fuels

Finely graded fuels have for a long time been a " drug " on the market, although modern developments in powdered fuel firing of boilers and furnaces are expected to enable a better commercial use to be made of the fines, dross, and washery silt, which for years have formed the waste products of many a colliery undertaking. Apart from fines from bituminous coal or anthracite other dusty fuel is produced by gasworks and coke ovens, such as breeze or ballast, and from locomotive cleaning (smoke-box char).

Whenever a fuel is cheap suggestions are never wanting as to processes and apparatus in which it might be used. Such remarks are especially applicable to processes suggested in connection with the economical gasification of dusty fuels. Observations of this kind may equally be applied to the use of the gas producer process for gasifying fuels rich in dust.

The difficulties experienced in gasification are generally the great density of the fuel bed (necessitating the use of high air pressures), the tendency to uneven burning, and the thermal losses which occur due to dust being mechanically carried away with the gas leaving the producer. Furthermore, since many finely graded fuels are also rich in ash, serious clinkering difficulties have often been experienced, resulting in a more uneven burning than that due to the grading only.

All of these difficulties may be overcome more or less successfully in most of the ordinary gas producers, so long as these are worked at a low rate of gasification. The amount of fuel that can be gasified in a given producer without excessive losses not only depends on the grading and ash content of the fuel, but also on its caking tendency. Indeed, dusty fuels showing medium caking properties are more economically gasified than fuels of the low or non-caking varieties, mainly because the "denseness" of the fuel bed becomes less pronounced when the smaller fuel particles cake together and form a fuel bed of a consistency approaching that made from fuels of a larger grading but of the same caking tendency.

Many firms will put forward gas producers for dusty fuels of exactly the same design as their ordinary type, but will adopt a rate of gasification considerably less than with an evenly graded fuel such as, say, nuts. A gasification rate of 6 to 8 lbs. per sq. ft. per hour is by no means unusual, thus causing the first cost of plant per ton of fuel gasified to be a high one.

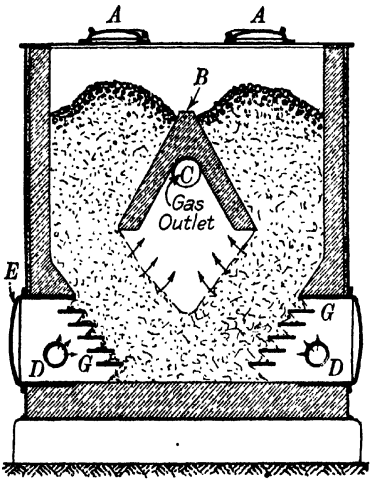

FIG. 218.—PINTSCH PRODUCER FOR DUSTY FUELS (DIAGRAM).

Fig. 33 shows how Rehmann proposes to prevent the dust loss in the gasification of finely graded fuel, by collecting this in a large chamber and blowing it from time to time back again into the producer.

The German firm of J. Pintsch build a special gas producer for dealing with dusty fuels as shown in figs. 218 to 220.

It (fig. 218) consists of an inclined step grate G, and transverse brick arch B, which enables the gas to be removed from below the top level of the fuel, which is introduced through a series of charging doors A; C is the gas outlet pipe, and D connections for the introduction of steam and air. The producer is worked under suction so as to enable the grate G to become easily accessible for ashing by opening the doors E, of which a suitable number is provided along each side.

A more modern type, illustrated in figs. 219 and 220, is circular in cross section, and provided with an internal central steel gas offtake pipe, which also serves as a vaporizer.

The rating of a 3·5 m. (11′ 6″) diameter producer is 450 B.H.P. on anthracite duff, which works out at a gasification rate of about 6 lbs. per sq. ft. and hour (30 kg. per sq. m. and hour).

The following operating results were obtained on a 160 B.H.P. producer using locomotive smoke-box char :—

Fuel Analysis.

15·85 per cent Moisture.
16·06 „ Ash.
3·03 „ Volatile matter.
5125 Cals./kg. net heating value.
9230 (B.T.U. per lb.).

Gas Analysis.

8·7 per cent CO_2.
20·6 „ CO.
16·7 „ H_2.
Net B.T.U./cub. ft. (N.T.P.) = 118·9.

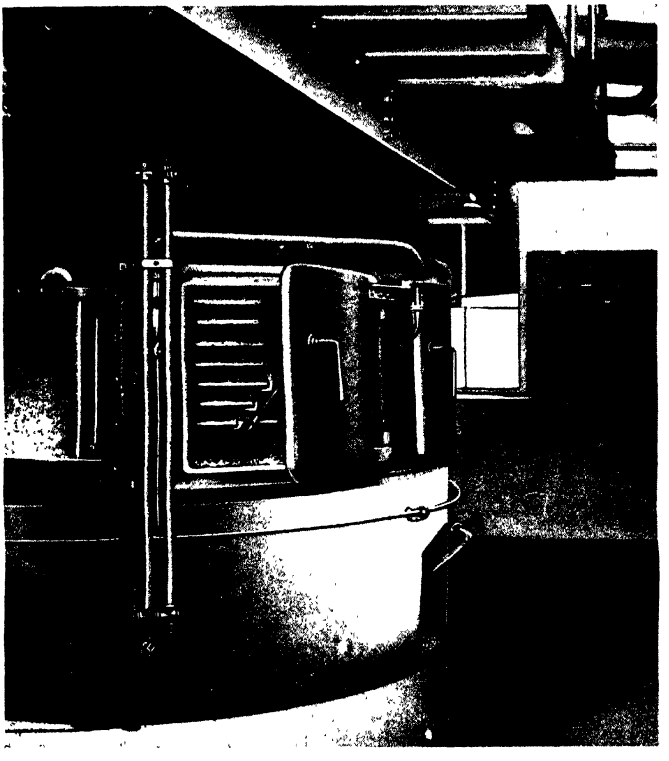

FIG. 219.—PINTSCH PRODUCER FOR DUSTY FUELS.

Although the gasification results are satisfactory, it will be clear that it is customary to adopt a low gasification rate for this type of producer also.

Recently Bourcoud[1] has revived the interest in powdered fuel gasification by carrying the previous experiments (upon producer gas production on the lines of modern powdered fuel burners) a stage further, previous plant having given insufficient satisfaction due to the low heating value of the gas and the difficulty

[1] A. E. Bourcoud, "Gasification of Powdered Coal," *Chem. and Met. Eng.*, April 6, 1921.

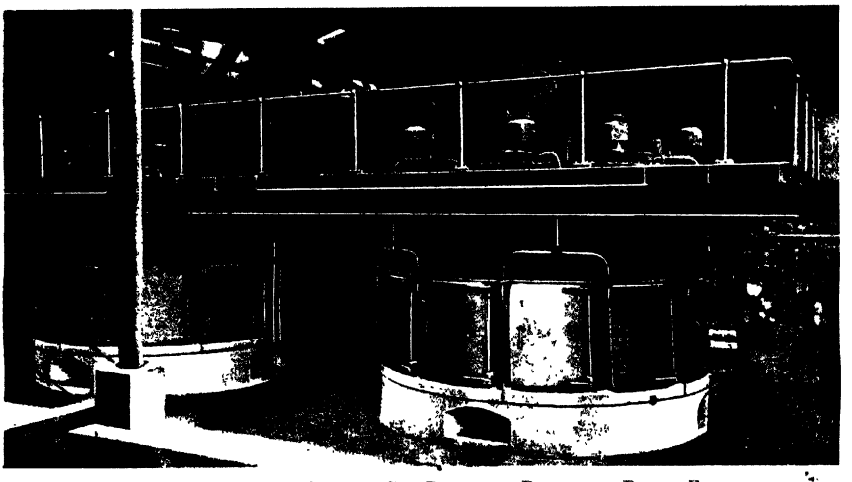

FIG. 220.—600 B.H.P. SUCTION GAS PRODUCER PLANT FOR DUSTY FUELS.

of preventing the incompletely gasified coal particles from being retained in suspension as powdered coke in the final gas.

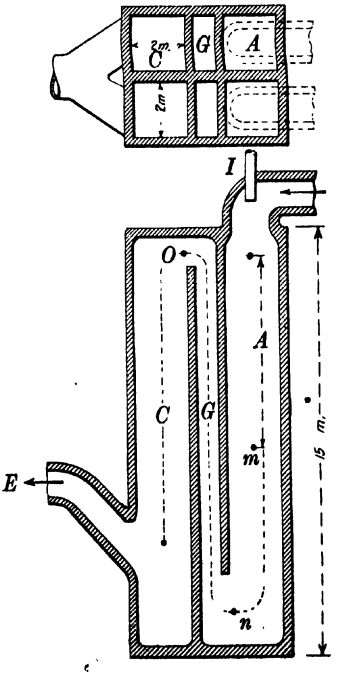

FIG. 221.—BOURCOUD'S POWDERED FUEL PRODUCERS.

Although apparently no results of a large-scale industrial plant have been reported upon, and the Bourcoud process would appear to require still further development, an outline of the principle of this powdered fuel producer is given below as an indication of the present stage of developments in this respect.

Fig. 221 shows a sketch of a producer proposed to gasify 150 tons of bituminous coal per twenty-four hours. In its essential parts it consists of two sets of two 2 m. sq. by 15 m. high vertical chambers A and C, separated by a third narrow chamber G.

Injection of powdered coal and air (pre-heated to more than 400° C.) takes place at I, the path of the coal dust and gas following the dotted lines downwards through the combustion chambers A up through the passages G, and finally downwards through the chambers C, at the bottom of which, at E, the gases are removed. Ashes are to be removed at the base of chambers C and A, in the latter as a liquid slag, in case a fusible ash is employed.

The maximum velocity of the gases in A

is said to be 6 m. per second (about 20 ft.), while it is three times as large in G, thereby ensuring that any remaining suspended matter (ash and coal dust) is carried forward to chambers C. The total time the gases are in the chambers is about 4 seconds, and the exit temperature is said to be in the neighbourhood of 1200° C.

A commercially successful plant of this type should find extensive use, but it would appear doubtful if any appreciable amount of dust (ash and carbon) can be settled out from gases which travel at such high velocities; further, at gas outlet temperatures of about 1200° C. the calorific value of the cold gas would be very low if complete gasification is achieved. Doubtless the fuel surface exposed in such a producer will be very large per unit of fuel actually in the producer, but is the time that the fuel is in the producer long enough to effect complete gasification? This question is obviously one that can only be answered by actual results of large scale working.

5. Producers of Large Gasification Capacity

There is no limit as to the size of producer that can be built in one unit, so long as a suitable fuel is available and the producer design is arranged accordingly. If in the time to come a gas producer of, say, several hundreds of tons daily gasification capacity is required, then it can be built.

At the present moment of industrial developments, there is no call for "giant" gas producer units, the maximum capacity at present required in the trade being generally below 50 tons bituminous coal daily throughput, the governing factor being mainly the difficulty and expense to be anticipated in operation when such large units are shut down for repairs or overhauling.

The means whereby we can obtain a gas producer of large throughput capacity are:—

(1) High rate of gasification.
(2) Large gasification area.

The gasification rate depends both on the fuel nature and on the producer type.

By using large-sized, non-caking, free-burning fuels having a large exposed surface available for contact, the gasification rate can be made very high (see pp. 133-148, on liquid slag producers, and p. 343 on small traction producers). Fuel of too small a grading cannot be efficiently used at high gasification rates, since the dust loss may be excessive.

When employing large gasification areas it is necessary to adopt means whereby an even-burning fuel bed is obtained; the larger the diameter of a circular gas producer, the more difficult does it generally become to obtain even burning. For a producer rectangular or oblong in cross section there is, on the other hand, not likely to be any greater difficulties experienced in gasification if the producer be extended only in one direction (see fig. 89).

The compromise between a circular and long rectangular producer is an annular producer with mechanical grate, a proposal for which is shown in fig. 222. Apparently no such producer has yet been built, but as proposed by Messrs. Pintsch, the external diameter of the producer shell would be about 10 m., while the

internal diameter would be about 4 m., thus leaving an annular width of 3 m. (10 ft.) available for gasification.

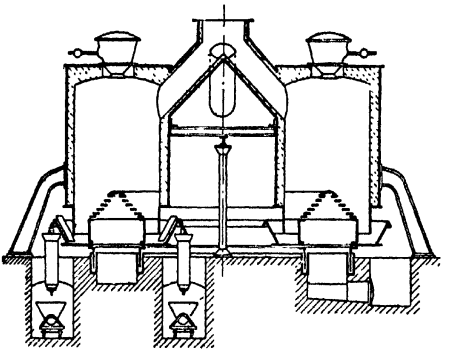

FIG. 222.—PINTSCH ANNULAR GAS PRODUCER.

Such an arrangement might solve the question, but probably just as good a solution would be a liquid slag producer of great fuel depth to decrease the exit temperature of the gas, and which is also made wider at the top than at the base (to decrease dust losses).

6. GAS PRODUCERS OF SMALL GASIFICATION CAPACITY

A gas producer can, practically speaking, be made as small as required, generally the limitations in design will be found in the particular purpose which the producer has to fulfil. One special example of small gas producers is dealt with under traction gas producers.

Fig. 223 shows a "Dwarf" gas producer built by the German firm of Deutz. The producer A is suspended, the body casting of the same being cast in one with the base of the scrubber B. The rotary grate of the producer is hooked on to the body and the top grate plate can be turned by hand. The height from floor level to the top of the feed hopper is about 5′ 6″, so that a man can easily feed in the fuel, generally anthracite. There is no vaporizer, steam being only obtained by running water on to the grate bars.

Also the gas scrubber B is made of compact design in so far as a vertical division plate divides it into two separate compartments, each being supplied by its own water spray.

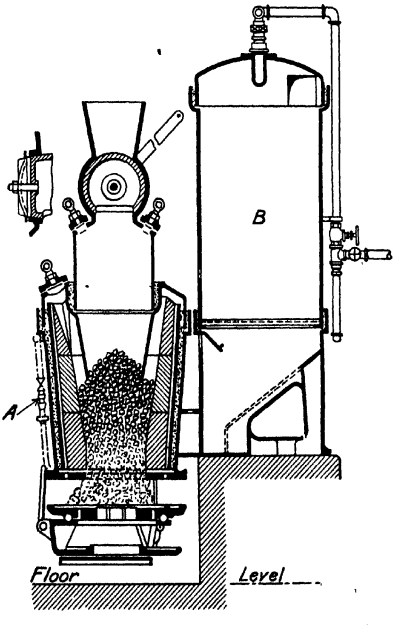

FIG. 223.—DEUTZ SMALL GAS PRODUCER.

Fig. 224 shows a gas producer such as is sold by J. Pintsch for disinfection purposes. It consists of a small gas producer fixed in a portable way to a light framework of iron tubing. The gas is made by blowing in air from a little hand-blower and is cooled by the surrounding air as it travels down some vertical pipes,

whence it is taken by a hose to the particular point to be disinfected, say for sanitary purposes. Producer gas rich in CO in any case is an excellent means for killing mice, rats, and other vermin, be it on farms or ships.

Fig. 225 shows a small portable gas power unit such as has lately been put upon the market by the National Gas Engine Co. The small plant shown is for the use of charcoal, and intended for use in such parts of the Colonies where no coal or anthracite is available.

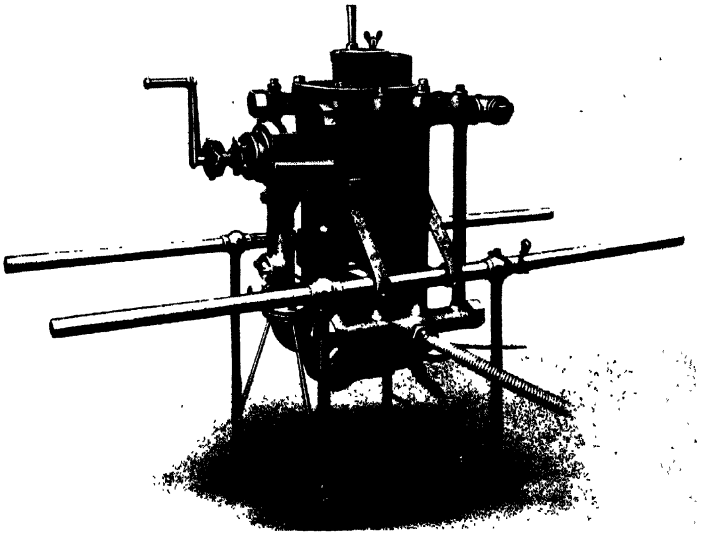

FIG. 224.—PINTSCH PORTABLE DISINFECTION GAS PRODUCER.

7. TRACTION GAS PRODUCERS [1]

There is no fuel which is more convenient and suitable for driving the internal combustion engines of motor cars, lorries, and tractors than petrol.

Not only is the cost of this fuel high, but unfortunately, at the present rate of development of the use of motor-driven vehicles, it is likely that the world demand will exceed the production, so much so that in the U.S.A.—the main supplier of the world's petrol requirements—serious investigations are being made into the possibility of developing new sources of oil and petrol supply.

Most petrol engines are easily adapted to work on producer gas, indeed more than one motor car maker in this country test the petrol engines for their cars in the shops by producer gas generated in a stationary plant. It is not possible, however, to generate the same maximum power by producer gas as by petrol in a petrol engine, a decrease of about 15 per cent in the power rating being a usual figure.

[1] Since the preparation of the manuscript the following articles concerning producer gas driven tractors have appeared in *The Engineer*: July 7, 1922, "Thornycroft Lorry"; September 1, 22, 29, 1922, "French Suction Gas Lorries and Tractors."

Seeing that the fuel cost in this country per B.H.P. when using producer gas from first-class non-volatile fuel is only a very small part of that when using petrol, it is obvious that a large saving may be achieved in the running cost of motor vehicles if a producer gas plant can be developed, the operating difficulties of which do not counterbalance the decrease in fuel costs.

The part of the total running costs which is attributable to fuel only becomes greater the larger the size of motor, therefore the best opportunity to prove the commercial success of a producer gas driven motor vehicle would be in cases where the engines have a large fuel consumption. Since the addition of a gas producer

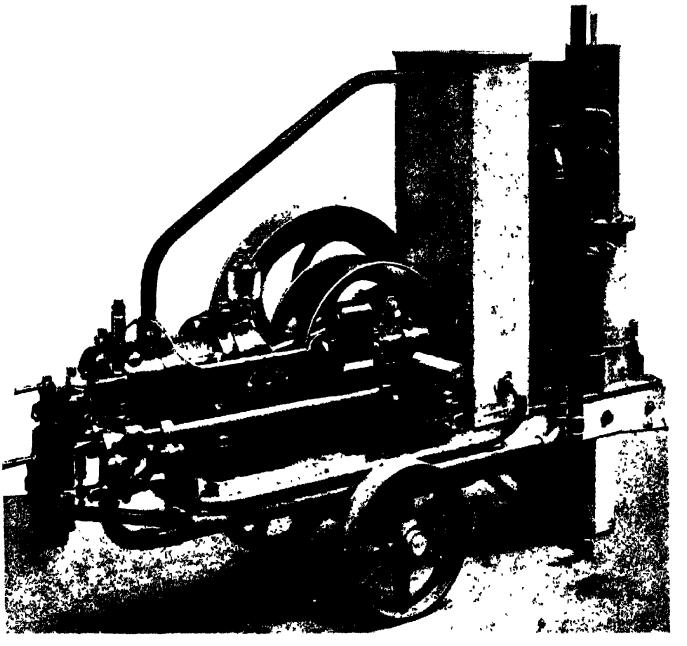

FIG. 225.—NATIONAL PORTABLE PRODUCER GAS PLANT AND ENGINE.

plant to a motor vehicle means an increase in the total weight, and a decrease in the space available on the vehicle, it will also be clear that the more favourable opportunity for producer gas competition will be for heavier, larger, and slower-moving vehicles, where the addition of the producer gas plant becomes the smallest part of the total weight and total storage space.

For the above two main reasons producer gas driven vehicles have, up to the present moment, only been used in connection with the driving of lorries and tractors.

Although at the moment it cannot be said that producer gas driven vehicles are being adopted broadcast, the work of the last few years appears to have brought us much closer to finality in design, so much so that we may perhaps look to the road vehicle as one of the future producer gas consumers.

The main considerations to be given to the design of a producer gas plant of this type are :—

(1) Lowest possible weight.
(2) Smallest possible space.

As an example of how a successful gas producer plant for driving a motor vehicle *must* differ from that of the ordinary stationary types hitherto described, suffice it to mention that if one of the latter, without alteration, were placed on an ordinary lorry, there would be no space available for carrying useful load, while the weight of the gas plant, fuel, and cooling water storage would probably exceed the weight-carrying capacity of the lorry.

Obviously, therefore, not only the gas producer but also the gas cleaning and cooling plant must be designed with the highest degree of working intensity in view.

The producer must be of a type suitable for high rates of gasification, and since the gas production will be governed by the suction stroke of the engine, the resistance of the fuel bed must be as small as possible. With this object in view, and also to save weight of fuel, the fuel bed is made very shallow, from 4″ to 9″. To enable the reducing reactions of the CO_2 and steam with the carbon to be completed in the correspondingly small time available, the temperature of the fuel bed must be exceedingly high, which in its turn is effected by a high gasification rate, about four times that of ordinary stationary producers. With the latter, ashes are allowed to accumulate as the gasification of the carbon proceeds, but with some traction producers ashes are said to be removed continuously as they are formed, thereby preventing clinker formation.

Possibly to achieve this it is necessary to remove the ashes in a half-burnt state, but with a fuel low in ash the thermal loss due to the ashes being, say, half carbon and half ash would be no serious detriment to the commercial success of a plant of this type.

It will be clear that for intensely worked gas producer zones it is essential to have a brick-lining of very refractory property, which also must be thin (to reduce weight); bauxite, magnesite, carborundum, or similar compounds have been employed. A thin lining will not be economical as regards radiation losses, but the surface exposed for radiation per unit of coal gasified is comparatively small, and even if the total radiation loss were many times that of an ordinary gas producer it would have no serious effect upon the total fuel cost saving as compared with petrol.

To generate economically a producer gas suitable for engine use in an apparatus of this type it is essential to use a first-class fuel, which must be low in ash content, expose a great surface for gaseous contact, and be of even grading. The fuels so far found the best are charcoal, and specially prepared low temperature coke, both being often preferred to anthracite in spite of the larger volume required for storing.

The gas-cleaning plant should be designed mainly to remove dust from the gas and to cool the same suitably for use in the engine. Since carrying large quantities of water for cooling purposes decreases the net load of the vehicle, air-cooled tubular cleaners or evaporative coolers are used, while specially light filters for catching

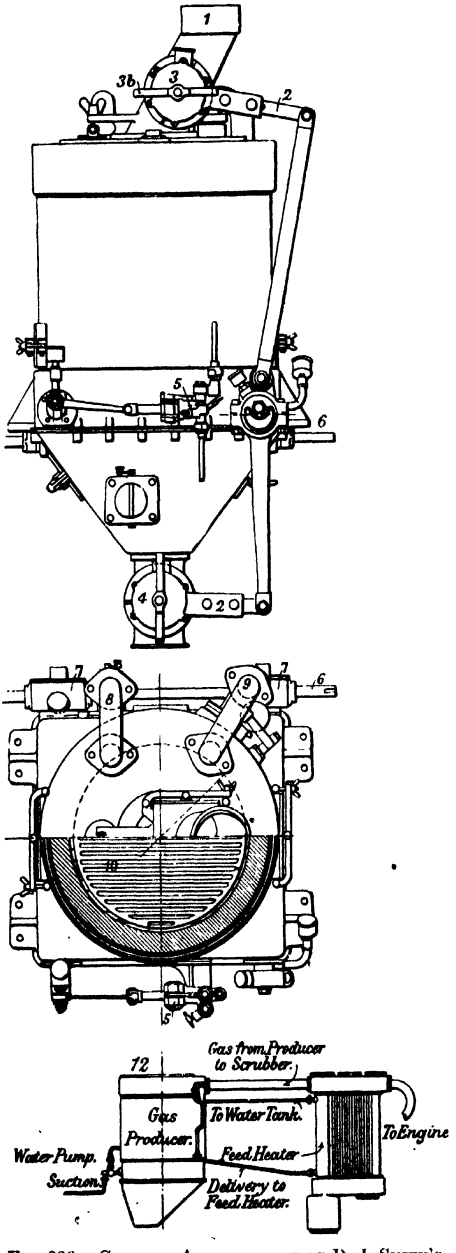

FIG. 226.—GENERAL ARRANGEMENT OF D. J. SMITH'S GAS PRODUCER PLANT FOR VEHICLES.

1. Fuel Inlet Pipe.
2. Adjustable Fuel Feed and Ash-discharge Gear.
3. Fuel Feed Valve.
3*a*. Friction Drive for Feed Valve.
3*b*. Handle for independent Hand Operation of Feed Valve.
(Note that the position of the handle indicates the location of the feed aperture.)
4. Ash Discharge Valve.
4*a*. Friction Drive for Ash Discharge Valve.
4*b*. Handle for Ash Discharge Valve. (Similar to that on fuel feed valve.)
5. Water Pump.
6. Main Operating Gear Shaft driven direct from Engine.
7. Totally enclosed and continuously lubricated Driving Gear for the Fire-bar Camshafts; these also drive the water pump, fuel feed valve, and ash discharge valve.
8. Pipe conveying Steam and Air to the underside of the Fire.
9. Air Supply Pipe from interior of Jacket to Vaporiser.
10. Fire-bars, alternate sections pivoted at alternate ends, the free ends being vibrated section by section and successively by cams on revolving shafts.
11. One of the Cams for vibrating the Fire-bars.
12. Diagrammatic Arrangement of Producer and Scrubber.

the last dust traces are employed. As is well known, producer gas made at high gasification rates will contain a large amount of dust, and consequently special attention must be paid to the proper elimination of this from the gas.

Two types of traction gas producer plants have lately been put on the market in this country, viz., the Smith type and the Parker type.

The Smith producer, figs. 226-228, was described in a paper read before the Institution of Automobile Engineers in January 1920.[1] The drawings are one-eighth full size and represent a 50 B.H.P. plant, the grate being 12″ in diameter and the weight 2·75 cwts. (140 kg.) or about 6 lbs. per installed H.P. In connection with the rating of a motor-driven vehicle it should be borne in mind that the engine is only very seldom working up to its full power. At full load the rate of gasification works out at about 80 lbs. per sq. ft. (400 kg. per sq. m.) of cross-sectional area and hour.

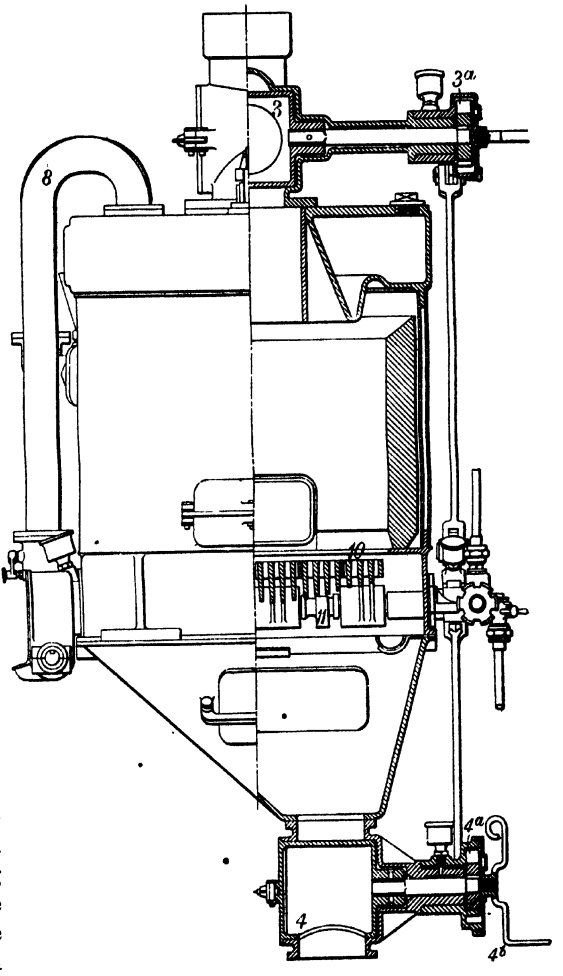

Fig. 227.—Sectional Elevation of D. J. Smith's Gas Producer.

The producer, figs. 226 and 227, is provided with mechanical means for feeding the fuel and for the discharge of ashes; the grate bars are also mechanically operated to ensure ash removal from the producer continuously and in the quickest possible way. This will mean that the fire will be direct on the grate bars, which, therefore, may require replacement more often than if covered in the usual way.

Before entering the fuel bed, the air is passed round a jacket in the producer

[1] D. J. Smith, "Producer Gas for Motor Vehicles," *Engineering*, January 9, 1920.

casing (thus reducing radiation losses somewhat) and thence over the surface of the water in the vaporizer placed at the producer top. A special device is supplied whereby the effect of the rolling of the vehicle upon the water level is controlled. The water for the vaporizer is supplied by a pump operated from the main operating

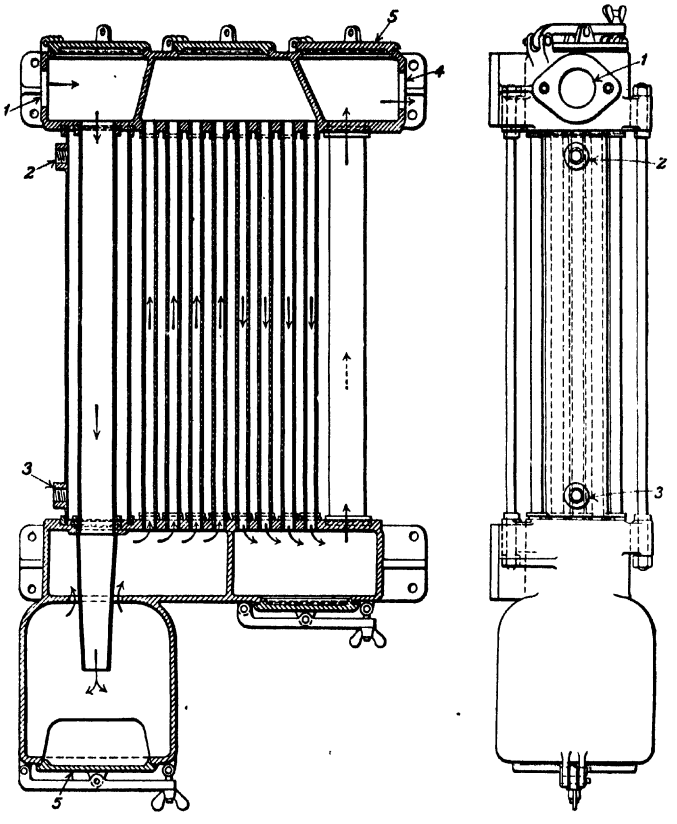

FIG. 228.—GAS SCRUBBER FOR SMITH TRACTION GAS PLANT.

1. Gas Inlet Branch. 2. Water Outlet Branch. 3. Water Inlet Branch. 4. Gas Outlet Branch. 5. Quickly opened Cleaning Doors.

The arrows show the direction of flow of the gas. The water circulates upwards past the first down-tube.

cranks. The speed of fuel and water feed is altered in accordance with the opening of the engine throttle.

Fig. 228 shows the gas-scrubbing device used for this plant. The gas from the producer enters at (1), passes in a downward direction through a large water-cooled tube, at the base of which a dust-settling pocket is provided. The gas leaves the dust-settling chamber by an annular passage to travel up and down a series of small air-cooled tubes, and thence upwards through two or more tubes of larger diameter

which are fitted with easily removable fine gauze filters for arresting the dust. At (4) the gas leaves for the engine, or if further dust removal is necessary, it first passes through a water seal. The dust caught in the plant should be removed or washed out every day and the gauze filters shaken clean.

Figs. 229 to 232 show the Parker gas producer plant as used for traction purposes.[1] This plant consists of gas producer, dust extraction cooler, and packed gas scrubber.

Fig. 229 is a photograph of a 3-ton lorry fitted with this plant. The producer, which is circular in cross-section and provided with a large somewhat taper fuel hopper (square in cross-section), is placed on the side of the front part of the chassis,

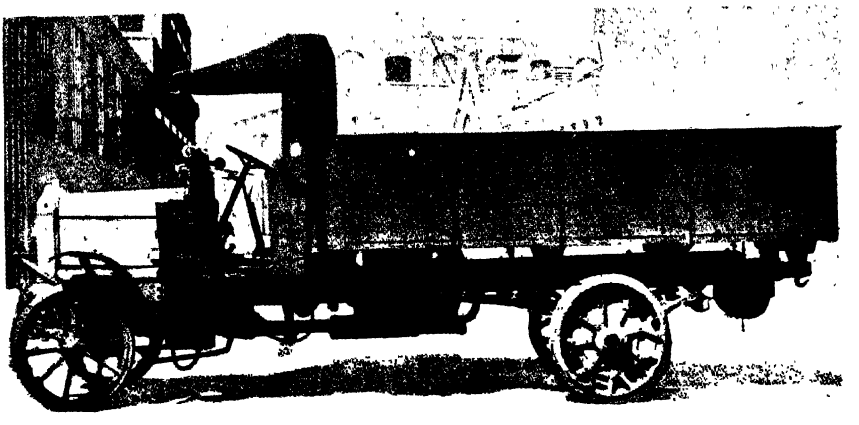

FIG. 229.—3-TON MOTOR LORRY WITH PARKER GAS PRODUCER

thus being within easy reach of the driver. The gas cooler and the scrubber are placed in a horizontal position on each side of the framework behind the driver's seat.

Fig. 230 shows the gas producer in more detail. Below the fuel storage hopper is a flat rectangular gas-collecting chamber containing a perforated conical plate, which prevents the fuel entering the gas-collecting box. The brick-lining, which is said to be made of a special chrome composition, is fitted inside a steel casing suspended from the top, thus facilitating easy replacement of the lining; the depth of the base is about 16″, and the mean internal diameter 11¼″. The annular space left between the detachable firebox and the main producer casing is used for preheating the air previous to its entry into the fuel bed.

The grate is of the flat bar type, made of special cast-steel alloy, and arranged to swing round a pivot so that it can quickly be dropped down to the position indicated in dotted lines, thereby enabling the fire to be raked out.

The grate is provided with an annular water trough, which serves as a vaporizer. To prevent ashes falling into the trough, a loose T-shaped cover ring is provided.

Engineering, June 17, 1921.

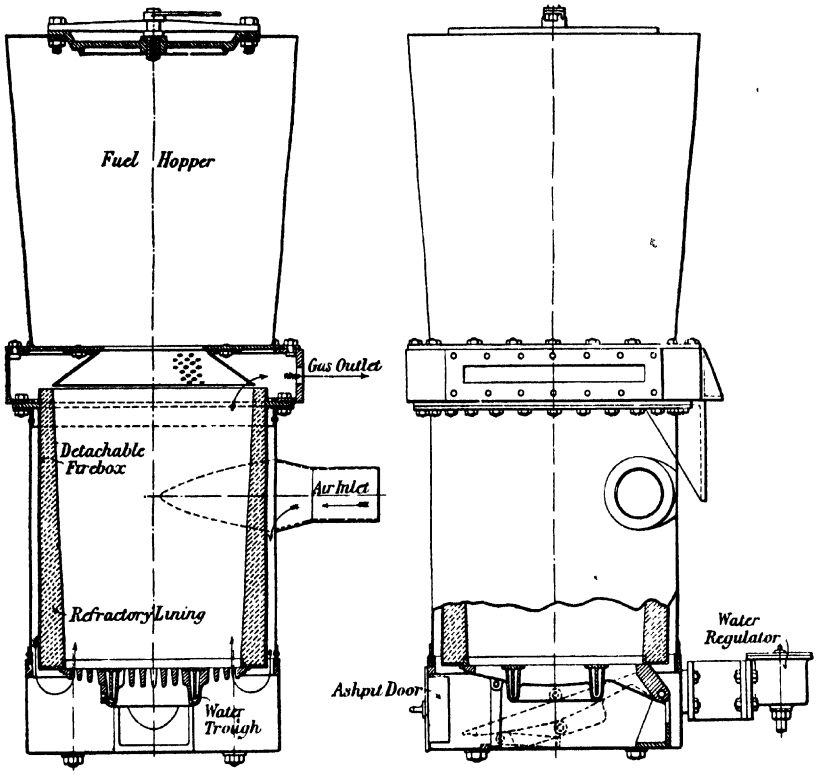

FIG. 230.—PARKER GAS PRODUCER.

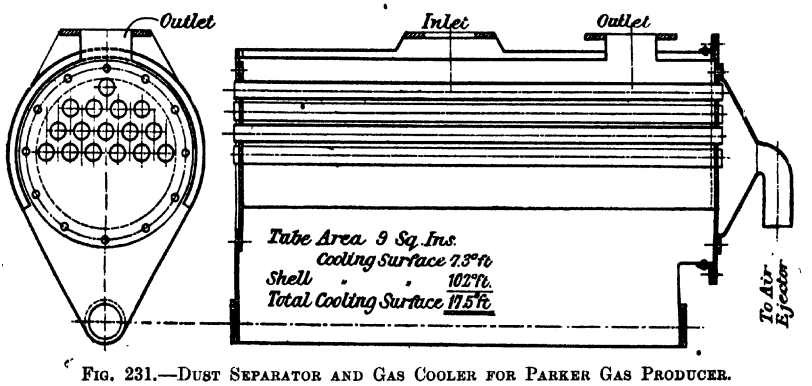

FIG. 231.—DUST SEPARATOR AND GAS COOLER FOR PARKER GAS PRODUCER.

The water level in the trough is maintained constant by a feed regulator of the float type.

It will be seen that no mechanical fuel-charging or ash-discharging means are provided, nor is the vaporizer apparently of large capacity. In the working of the producer the vibrations and jolting of the lorry are relied upon to ensure regular feeding of the fuel and to keep the fuel bed compact and solid.

The capacity of the standard fuel hopper corresponds approximately to a twenty-five to thirty-mile run, but the fuel storage can be made much larger by also making use of the space below the driver's seat for the full width of the carriage.

The producer is started up with a hand fan, the fire being ready for use in about fifteen minutes after lighting up.

Fig. 231 shows the primary dry gas cooler and dust separator, in which the

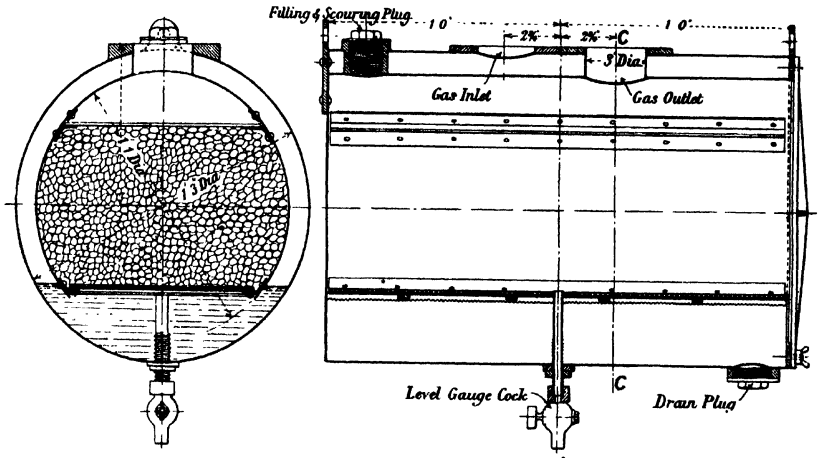

FIG. 232.—GAS SCRUBBER FOR PARKER TRACTION GAS PLANT.

cooling of the gas is effected by a number of air-cooled tubes, the openings in which face forwards and through which cold air is drawn by an ejector worked by the exhaust gases from the engine. The upper part of the cooler consists of two concentric shells, partly cylindrical, in the space between which the gas to the engine travels in a downward direction. The outer shell is extended downwards to form a wedge-shaped dust-collecting pocket, while the inner shell is open at its lower end, thus allowing the gas to pass in an upward direction between the tubes before leaving at the outlet branch at the top. The deposited dust is scraped out every day through the plug holes at the lower end of the cooler.

Fig. 232 shows the design of the scrubber. Like the cooler it consists of two concentric shells between which the incoming gas is passed. The lower edges of the internal shell are serrated and slightly luted in the water at the bottom of the scrubber. At the lower end of the internal shell two angles (facing inwards) are fixed. These serve to carry a perforated grid upon which

is placed a layer of pebbles (about ½″ diam.), the surface of which becomes wetted with the upward-flowing gas, thus scrubbing the latter. The depth of pebbles generally employed is about 4″ (not as per drawing). To enable renewal or cleaning of the pebbles, the one end plate of the scrubber is arranged for easy removal.

The guaranteed fuel consumption for a 3-ton lorry with 45 B.H.P. motor is said to be 3 lbs. of coke per mile of a 100-mile journey. The reduction in power of an ordinary petrol engine using this producer gas is about 15 per cent. About 20 gallons of water is needed for one week's running, and this can generally be stored in the ordinary petrol tank.

The weight of the producer is about 4½ cwts., so that with the 300 lbs. of fuel storage (for a 100-mile journey) the additional weight of about 800 lbs. represents less than 5 per cent of the gross weight.

8. Marine Gas Producers

The use of the internal combustion engine, of either the heavy oil and Diesel type or of the paraffin and petrol type, for ship propulsion has been so firmly established during the last fifteen years that there can be no doubt as to the internal combustion engine being capable of fulfilling the requirements that are particular to marine service. Nevertheless gas engines are to be found only in few ships, which is to some extent attributable to the failure of the gas producer plants that were fitted in the earlier types of gas engine driven ships.

The advantages that a motor-driven ship possesses over a steam-driven ship of the same power are mainly :—

(1) Less engine space and total weight. (No boiler.)
(2) Less heat consumption per B.H.P.
(3) Less space for fuel storage.
(4) Less labour.

All of these advantages are attached to a producer gas driven ship, although not in so high a degree, but on the other hand, the fuel *cost* per B.H.P. is likely to be less with producer gas than it is for either a steam- or oil-driven vessel.

A steam boiler will raise steam from most fuels, and so long as these do not vary considerably in heating value the steaming capacity required is not seriously reduced when coals from varying parts of the world are used. Similar remarks can be made in regard to the output of oil engines on fuel oil from all parts of the world.

A gas producer cannot, as we have seen, give the same output and gas quality independent of the fuel used, and even if a gas producer plant were so amply dimensioned as to give the maximum output required with a fuel generally considered unsuitable, it is clear that each time a different class of fuel were "coaled," at a certain harbour, the producer would have to be operated in a different way, thus necessitating the use of a very skilled gas producer expert instead of an ordinary stoker, if engine difficulties are to be avoided. With the present system of supplying

coal for ships, a marine gas producer installation is therefore not likely to become a success for ocean-going vessels.

On the other hand, tugs, river and lake steamers, or short-route vessels which can be assured of a reasonably regular quality of fuel supply should present a field where the use of producer gas for propulsion is entirely justifiable—indeed in some cases where producer gas has been used abroad for driving vessels of this class the installations have proved entirely successful.

At the present state of development of gas engine design, no vertical gas engine larger than 1500 B.H.P. has proved a commercial success on land service, hence at the moment, the size and speed of ship suitable for producer gas propulsion is

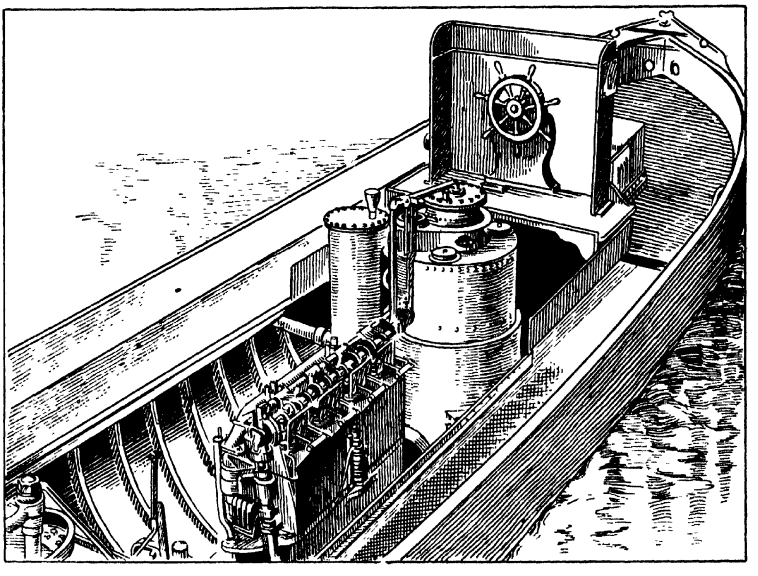

FIG. 233.—CAPITAINE'S GAS ENGINE LAUNCH.

limited. Whether such a limitation will apply to gas-driven ships of the future is to some extent dependent upon the commercial success of the gas turbine, or some other gas motor differing in design principles from the present vertical multi-cylinder gas engine.

So far, anthracite has been the only fuel successfully employed in marine gas plants, but with proper modifications of the gas-cleaning plant there is no reason why a vessel using a suitable bituminous coal should not be just as satisfactory in operation.

Whereas with a gas producer plant installed on land the water supply for cooling and cleaning purposes is sometimes limited in quantity for economic reasons, no such considerations apply to a ship. On the other hand, the possible corrosive action of the sea water must be borne in mind when designing the plant. Further,

since any water used to give steam for the gas producer is not condensed again, the vaporizing systems for marine gas producers require special consideration.

The first marine gas producer plant working under commercial conditions was that developed by Herr E. Capitaine about twenty years ago. A photograph (reproduced) of an 80 H.P. engine and gas producer of this type as installed in a German river launch is shown in fig. 233.

In this country, Messrs. Wm. Beardmore, Glasgow, Messrs. J. Thornycroft,

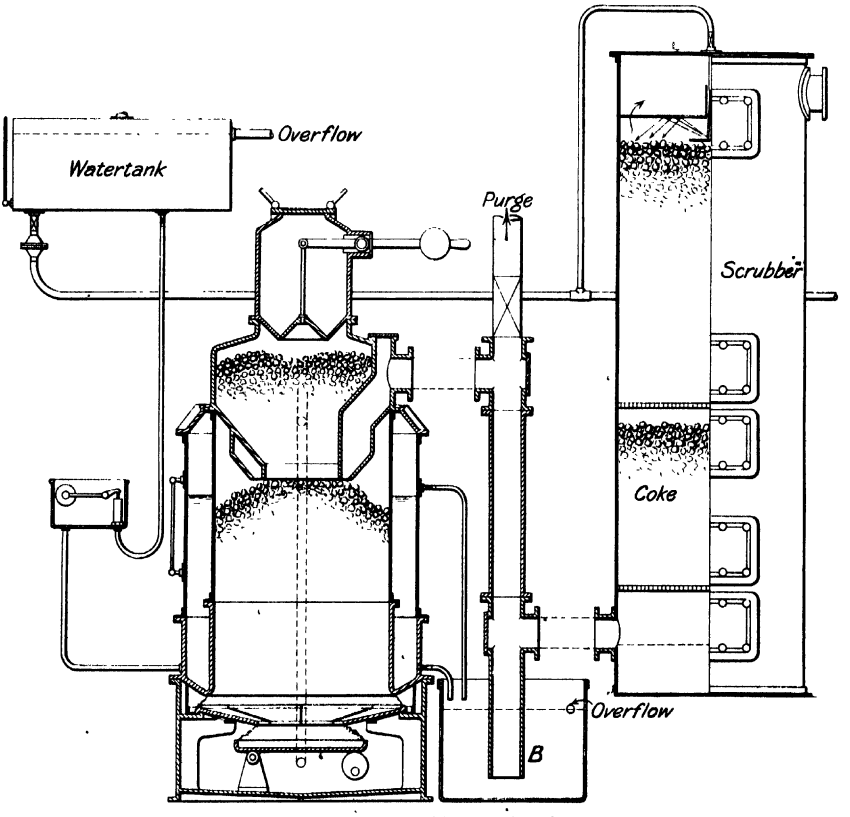

FIG. 234.—DRAKENBURGH MARINE GAS PRODUCER.

London, and Messrs. Holzapfel, Newcastle,[1] did further pioneer work during the following ten years, but the gas motor ships of recent date appear to have been extensively built only by Dutch and American firms.

Fig. 234 shows a diagram of the marine gas producer plant made by Maschinefabrik Drakenburgh, Utrecht,[2] who have fitted boats up to 700 tons with gas

[1] *Gas Power for Ships' Propulsion*, A. C. Holzapfel, Inst. Naval Arch., 1912.
[2] *De Ingenieur*, February 24, 1917.

producer plants. The producer is of the water-jacketed vaporizer type, water being arranged to flow continuously through the vaporizer, so that only a certain amount is evaporated; in this way the concentration of salts in the sea water in the jacket does not become high enough to cause serious incrustations.

The lower part of the vaporizer is made from cast steel and provided with cleaning holes, while the upper part is made of mild steel plates. In a more recent design the angle joint between the two casing materials is eliminated, due probably to leakage troubles, while the air for the gasification is passed over the water surface before being admitted to the grate. A constant level device of the float type is fitted to the water jacket while the spent water overflows at the base into tank B, and from there overboard.

The cleaning of the gas is effected in a wet coke scrubber similar to those described in figs. 264 and 270. Before being supplied to the engine the gas passes through a drier of usual type and a three-way cock whereby the gas from the plant can be supplied

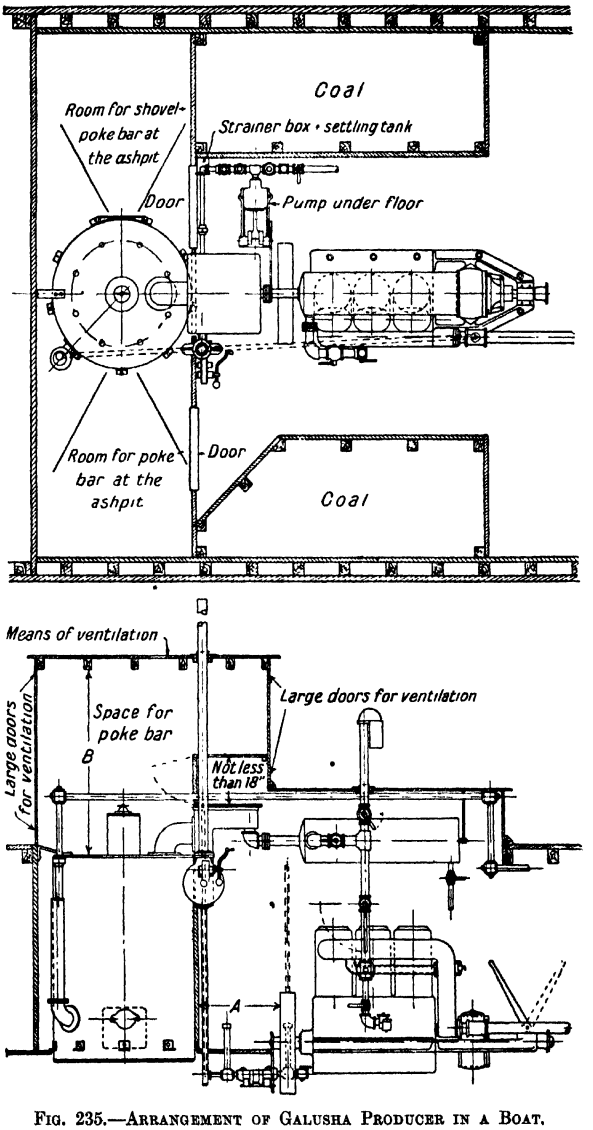

FIG. 235.—ARRANGEMENT OF GALUSHA PRODUCER IN A BOAT.

under suction to either the engine or a fan. The object of the latter is to maintain a reasonable rate of gasification in the producer during "stop" periods of the engine (say, when the ship is waiting at a river or harbour lock) so that the producer may be capable of immediate response to "full speed" demands. The power for this fan may be supplied by a small petrol engine, which also provides power for the purposes usually served by a "donkey" engine.

The Galusha gas producer, built by the Gas Producer and Engineering Corporation, New York, has also been extensively used for marine purposes. Fig. 235 shows a typical arrangement of this plant in a boat, while fig. 236 shows a 500-ton gas motor ship.

The floor round the producer is made of steel or concrete to eliminate danger from fire, and proper means should be provided for ventilating the space above the producer, to ensure removal of any escaping gases. To prevent dust and ashes from

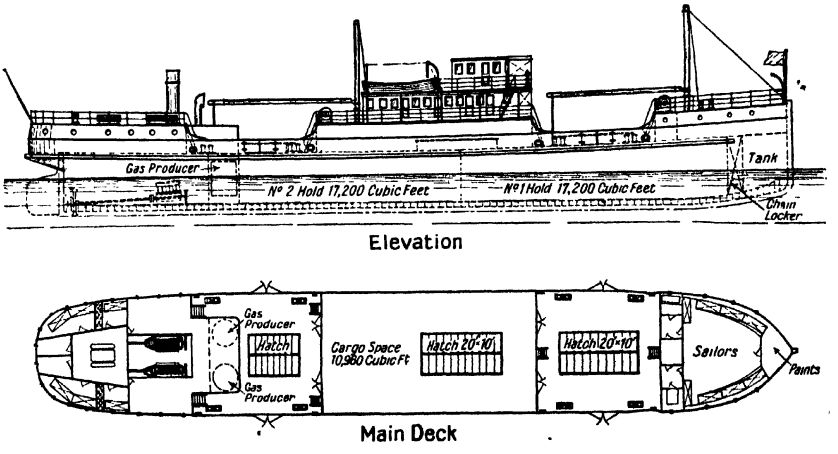

FIG. 236.—500-TON GAS MOTOR SHIP (GALUSHA PRODUCER).

getting into the engine-room the producer is advantageously separated from the same by a bulkhead. On this account a suction gas plant is generally a better type for marine purposes than a pressure plant.

The system of vaporizing by means of engine exhaust gases, described in reference to fig. 171, is one which lends itself well to the use of sea water, due to scaling troubles being lessened. Similarly the Galusha gas-cooling system, shown in figs. 273 and 274, gives an example as to how the gas cooler can be decreased in size when the cooling water supply is ample.

(*K*) ARRANGEMENT OF GAS PRODUCERS

The arrangement of gas producers in relation to one another and to their auxiliary plant, such as dust separators, gas valves and mains, coal and ash storage

and handling plant or producer house varies with practically every installation and the particular importance a user places upon his producer installation.

The separation of dust, and design of gas mains and valves being dealt with under the heading of "Gas Cleaning," Chapter V., we shall in this section mainly deal with the arrangement of the plant in regard to coal and ash handling or storage, although the particular methods employed for housing the producers, etc., and the designs of gas mains, will be mentioned as each fuel and ash-handling arrangement is described.

Fig. 237 shows the simplest arrangement of fuel storage possible, viz. in the corner of a gas-engine power house. The engine man will carry up the anthracite

Fig 237.—Suction Gas Plant and Engine (National).

in buckets to the producer hopper when required, while ashes will be raked out from the producer and carried away from the house in buckets, or wheeled away in a barrow.

A similar arrangement will be found quite satisfactory for many plants of small capacity, whether the producer plant is placed inside a building or not.

The degree in which the producer plant operator should be protected against the weather is to some extent a question of the climatic conditions. Thus in tropical climates it is absolutely essential to protect the men against the effect of the sun's rays, whilst in countries with hard winter climates snowstorms may prevent any man from working at all. In this country many large gas producer plants exist in which no protection whatever is made for the men against the weather. Apart from the humane point of view, a man will pay more attention to his duties

if unaffected by rain, snow, or wind. The loss which a user may sustain by neglectful working of a plant may be many times larger than that caused by the coal getting wet by rain, the prevention of which is generally efficiently attended to in most works.

Fig. 238 shows an installation of crucible furnaces which are semi-gas-fired, the producer hoppers (on the left) being placed at the floor level. Whenever required the furnace man can shovel coal into the hopper from the heap on the floor. An arrangement such as this has the advantage that both producer and furnace are

FIG. 238.—SEMI-GAS-FIRED CRUCIBLE FURNACES (HERMANSEN).

under supervision and operated by the same man. The ashes from the producer are removed in the basement of the furnace building, where also the cleaning of the furnace recuperators takes place.

The principle of storing coal on the floor at the hopper level is by no means confined to such small producer units as are generally used on semi-gas-fired furnaces. Wherever a suitable good-class coal is used in large producers, so that neither ash removal nor poking requires too much of the producer man's attention, he will be able to shovel the coal into the producer hopper. Formerly, when it was far more customary to allow one man for operating each static producer than nowadays,

the coal storage was arranged on an extension of the producer platform, the plates being suitably strengthened and supported to take this additional weight.

Fig. 239 shows such an arrangement (see also fig. 56). The coal is brought in trucks alongside the producer row, and thrown by hand, or raked, on to the coal platform, which is surrounded by a steel fence plating to retain the coal. A section of this fence is removed when the coal is raked in. To avoid the double handling of coal from truck to platform, and platform to hopper, the coal track may be placed in an elevated position or on stanchions and girders directly above the coal platform, thus enabling the coal to be dumped directly from the truck on to the latter.

For a battery of producers neither of such arrangements can be looked upon as an economical one from the point of view of operating costs. On the other hand,

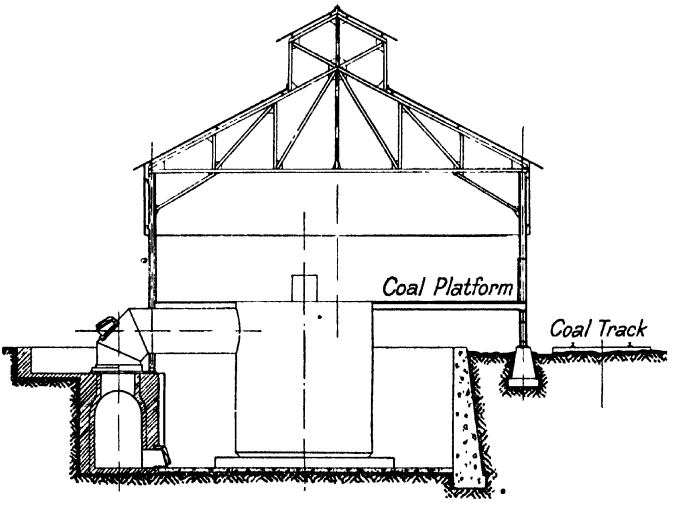

Fig. 239.—Hand-stoked Gas Producer (Amsler).

for plants containing one or two units, it is possible that platform storage of coal may form an economical procedure, depending upon the class of coal, amount of storage to be provided for, works transport arrangements, etc.

Fig. 239 further shows the producer sunk into a pit, from which the ashes withdrawn will have to be hoisted up from time to time, the reason for this arrangement generally being to maintain the track for coal and ash handling at ground level and to enable the underground gas flue to be easily cleaned. Cleaning doors are provided at ground level for the horizontal gas outlet pipe, and at the underground ashing level for the flue, soot and dust generally being removed through these every week end.

The producers and coal storage are protected against the effect of the weather by a steel-framed roof structure which must be provided with good ventilation means to enable the escape of gas leaking from poking holes, mains, etc.

FIG. 240.—CHARGING PLATFORM FOR SAWMILL REFUSE (RUSTON)

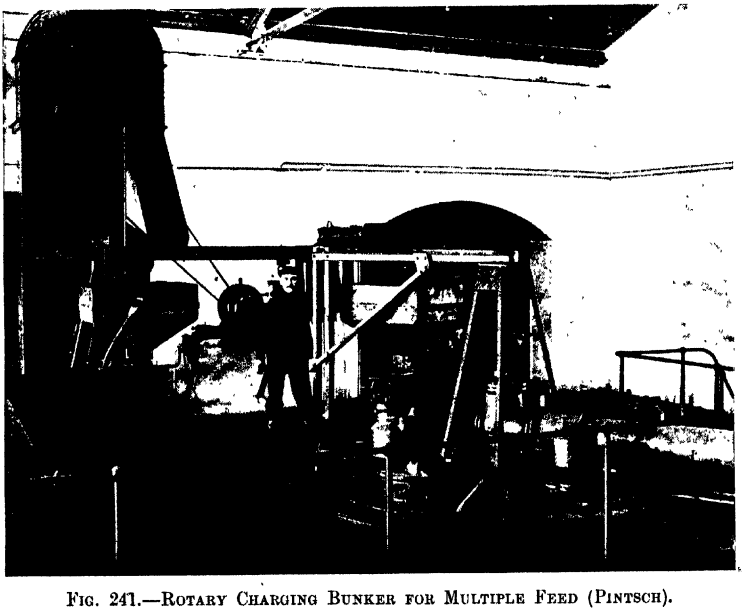

FIG. 241.—ROTARY CHARGING BUNKER FOR MULTIPLE FEED (PINTSCH).

Fig. 240 shows how the matter of fuel storage is dealt with in a sawmill where the gas producer plant is worked on the mill refuse ; the latter being often shovelled into sacks and these emptied into the charging hopper.

The fuel charged into each producer may be supplied from an overhead travelling skip (see figs. 113 and 150) of a storage capacity equivalent to a hopper charge; when several producers are in use this requires a continuous travelling backwards and forwards of charging skips.

Fig. 241 shows a method adopted in the case of charging a producer having a number of feed hoppers. A support carrying a pivot is placed centrally on the producer top. A sector frame carried in the centre from the pivot and at its outer two ends from columns supported on rollers running on a circular track at the outer edge of the producer is arranged to receive a small coal storage bunker, which is filled from time to time at the elevator. By turning round the sector frame on its roller supports coal can be charged consecutively from the large hopper into each of the smaller feeding hoppers.

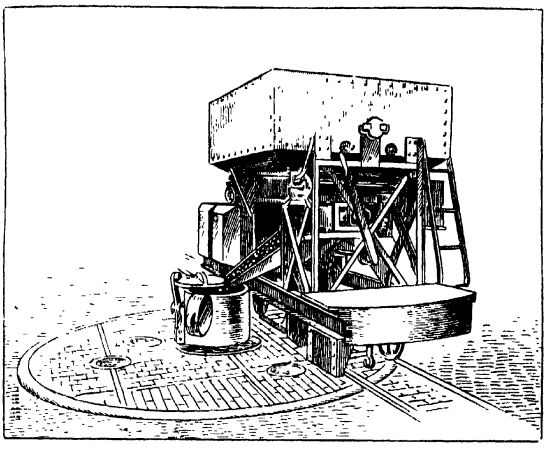

FIG 242*a*.

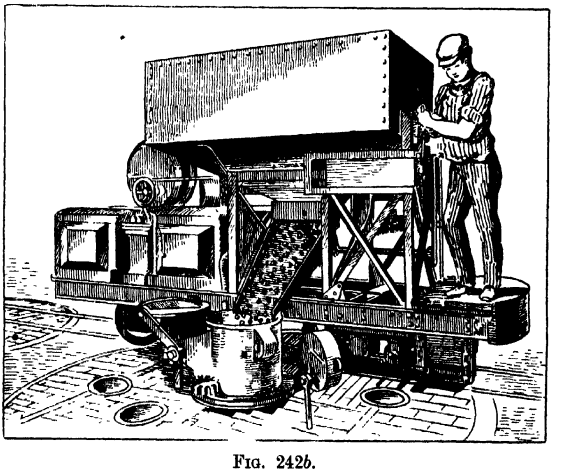

FIG. 242*b*.

FIGS. 242*a* AND 242*b*.—TRAVELLING COAL-CHARGING TRUCK (LATTA).

Figs. 242*a* and 242*b*[1] show how a large battery of producers may be charged from a coal truck of several tons capacity, which is arranged to travel on a rail laid on the crown of the producers and on the platform; the coal is discharged from the car into the hoppers from an inclined shoot, which is lifted into horizontal position when the hopper is full. Whenever empty the car is run under a large fuel storage hopper (at the end of the battery) to be refilled.

[1] *Latta American Producer Gas Practice*, Van Norstrand, 1910.

The advantage of a travelling fuel-charging device is mainly to be found in the fact that *one* large fuel storage hopper is always cheaper in first cost than a number of smaller ones of the same total storage capacity; furthermore, the extra cost of a producer house where each producer has its own separate bunker represents a considerable item against a producer house with a low roof.

Whenever a mechanical feeding device is provided with the producer it is, however, essential to have an overhead storage supply, consequently we may look upon travelling coal-charging devices as confined to producers with static fuel feed.

FIG. 243.—PRODUCER WITH OVERHEAD CIRCULAR STORAGE BUNKER (POWER GAS CORPORATION)

To obviate the necessity of handling the coal by mechanical means during more than a short time out of the total working period most producers have been fitted with overhead storage hoppers of a capacity corresponding to the load on the producer, and the facility possessed by any particular works for coal handling at various times of the day or week. From these storage hoppers the coal can be fed by gravity into the fuel-feeding devices as required by the producer. The coal is raised from railway truck level into the bunker by elevating mechanisms, such as skip hoists, bucket elevators, mechanical grabs, etc., the capacities of which are often based upon handling the whole of the maximum coal requirements of the producer gas plant in not more than one-third of the total working time. The storage capacity of the coal bunkers should thus never be less than sixteen hours for continuous operation, and generally more than this to allow for breakdown, repairs, etc.

The cheapest shape of bunker for a given storage capacity is the circular type, when a separate bunker is required for each producer, and the parabolic suspension type, when a continuous storage is supplied. Many bunkers are, however, made rectangular in section with pyramidal bottoms to conform with the angle of repose of the coal, thus eliminating the "dead" storage spaces existing between each producer feeding spout on a bunker of the continuous type. It should not be overlooked, however, that whenever flat plates are used in storage bunker designs special stiffening means are often required to prevent bulging of the plates. The stresses in circular or parabolic shaped plates

are, however, pure tensile stresses, thus eliminating bulging possibilities and enabling the minimum plate-thickness (about $\frac{1}{4}''$) to be adopted for the design.

Fig. 243 shows a producer with overhead bunker of the circular type having a conical bottom and feeding spout to the producer hopper. The bunker is carried on three supports fixed to brackets on the producer shell, while the top is provided with a framework for supporting the head of the bucket elevator. A circular weather screen, suspended from the bunker top, protects the producer man against rain or sun rays (especially in the tropics). The producer shown is one of deep fuel depth, hence a large space is provided between the platform and the bunker, to give plenty of room for handling pokers.

Fig. 244 shows a coal storage bunker of the parabolic suspension type. To prevent wear of the coal on the bunker steel plates these are rendered with about 2″ thickness of concrete. The coal distribution over the whole bunker length is effected by a band conveyer.

The operating platform of the producer is carried partly from the framework and partly from the producer casing. This procedure is quite satisfactory for producers of low fuel depth, while due to the difference in level possibly obtained for producers of deep fuel depth (due to heat expansion of casing in an upward direction) the platforms for the latter are best carried entirely from the producer casing, as shown in fig. 243.

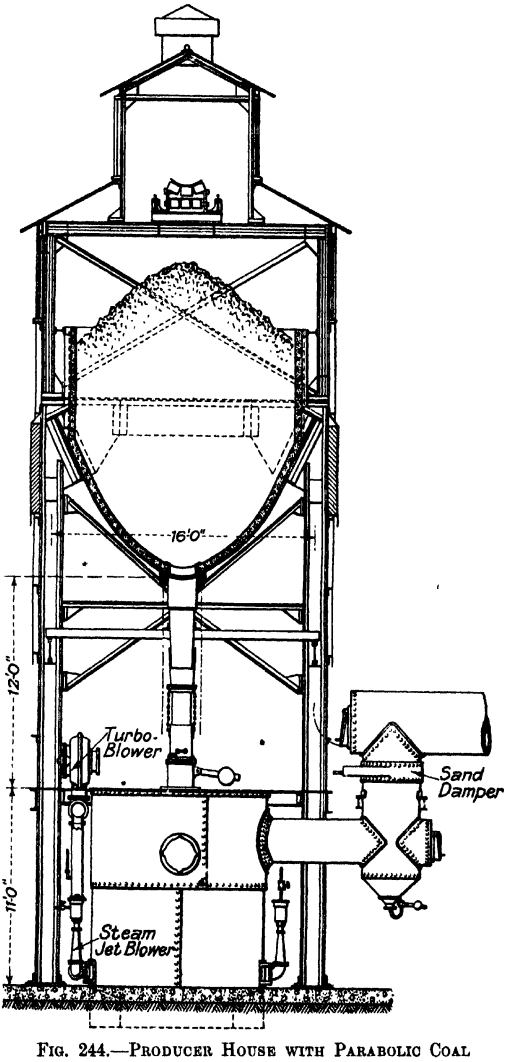

FIG. 244.—PRODUCER HOUSE WITH PARABOLIC COAL STORAGE BUNKER (HAGAN).

The gas leaving the producer is taken in an upward direction to an overhead gas main, from which it may be separated by the sand damper plate. Cleaning doors are provided for the horizontal pipes, while a dust outlet is provided on the vertical upcomer pipe.

Fig. 245 shows another producer house arrangement in which the continuous

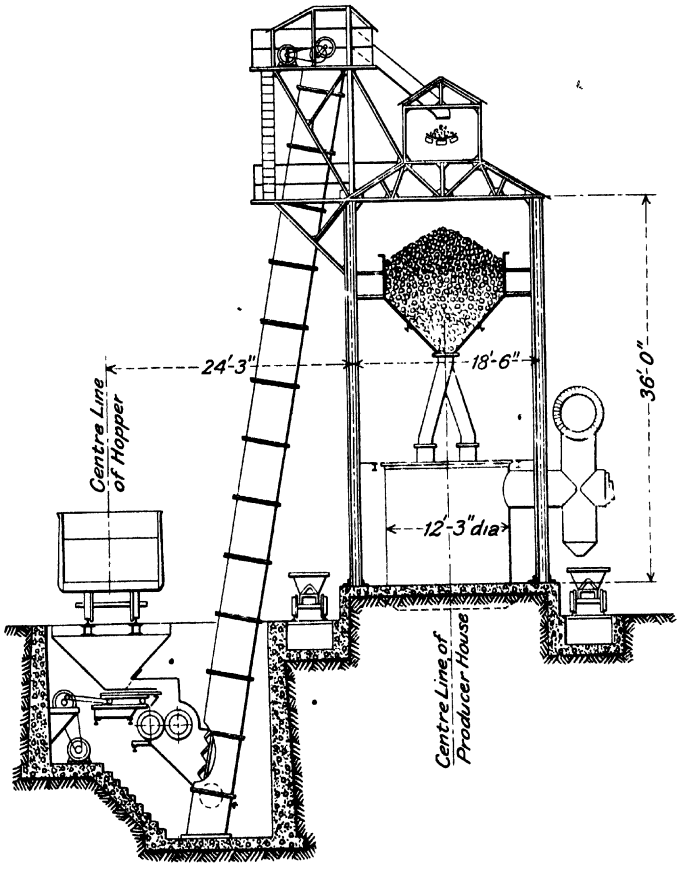

FIG. 245.—COAL AND ASH HANDLING PLANT FOR STATIC PRODUCERS (HAGAN).

fuel storage bunker is made of flat plates stiffened to resist bulging stresses. The arrangement of supporting the head of the bucket elevator from the end bay of the producer house structure should be observed. Since the driving of the bucket chain takes place from the elevator head the design should be such as to resist properly the vibrations during working. The elevator base is placed in a pit at a considerable depth below ground level, thus enabling space to be obtained

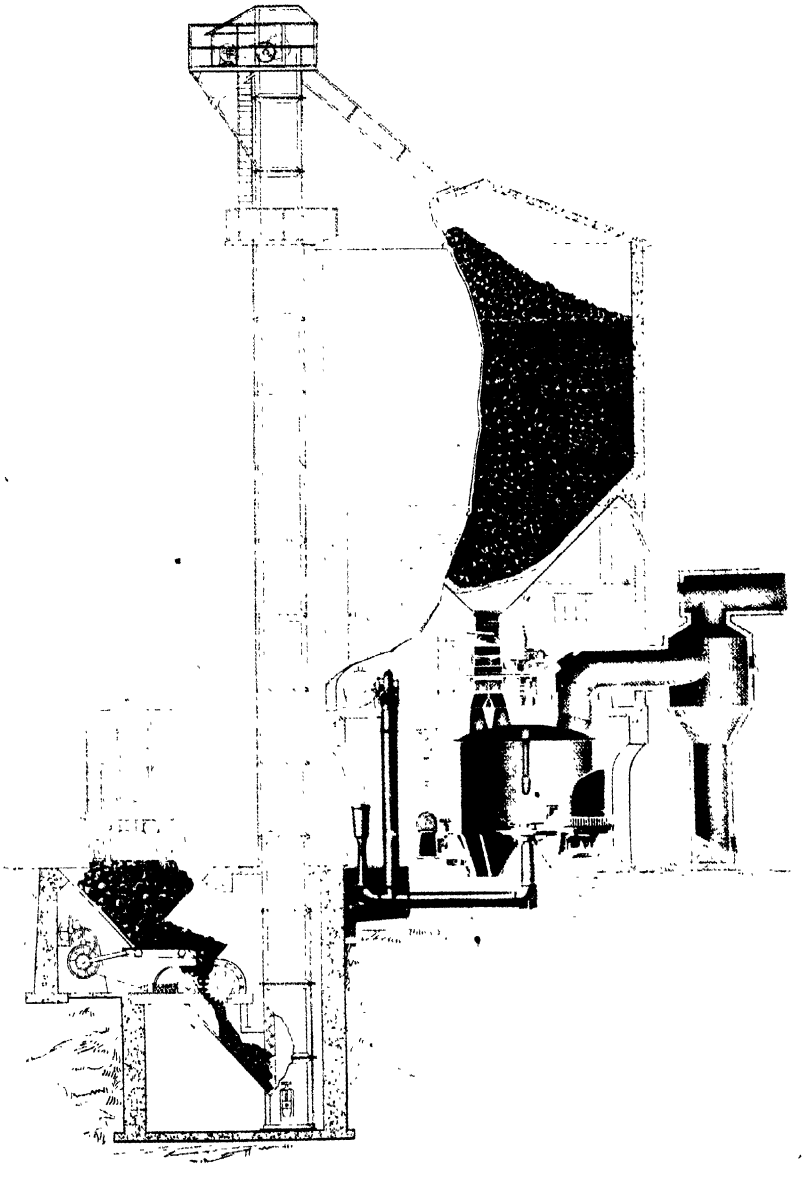

FIG. 246.—COAL HANDLING AND STORAGE PLANT FOR HIGH DUTY PRODUCERS (DIXON).

for an underground hopper, into which the coal is discharged from railway trucks, and for a shaking type of coal feed and a set of coal-crushing rolls which reduce any large pieces of coal to a size (say, 3″ maximum) more suitable for carrying in the elevator buckets and for gasification in the producers. On some plants a heavy screen is supplied which catches any large pieces of coal, which may be

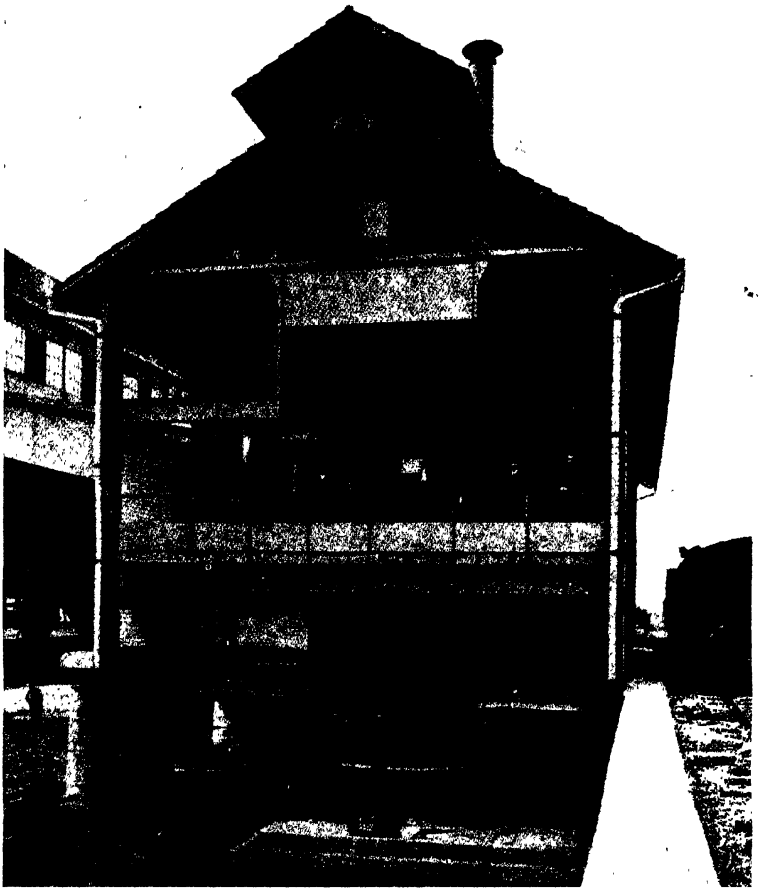

FIG 247.—BATTERY OF MECHANICAL GRATE PRODUCERS (POETTER).

broken up by a hammer. Neither crushers nor screen are required in case a nut or slack quality of fuel supply can always be relied upon.

On each line along the producer battery is run a track for small bogies for handling ash and dust.

Fig. 246 shows a high duty gas producer having a coal storage plant made from

reinforced concrete. The overhead bunker, of very large capacity, is circular in cross section, with conical bottom, and carried from concrete columns, the spaces between which are filled out with brick panels having windows and ventilating means. The operating platform is partly made from reinforced concrete, this platform serving as a brace for the bunker columns.

The elevator and coal-handling means are very similar to those of fig. 245.

Directly the gas leaves the producer it is expanded into a large chamber,

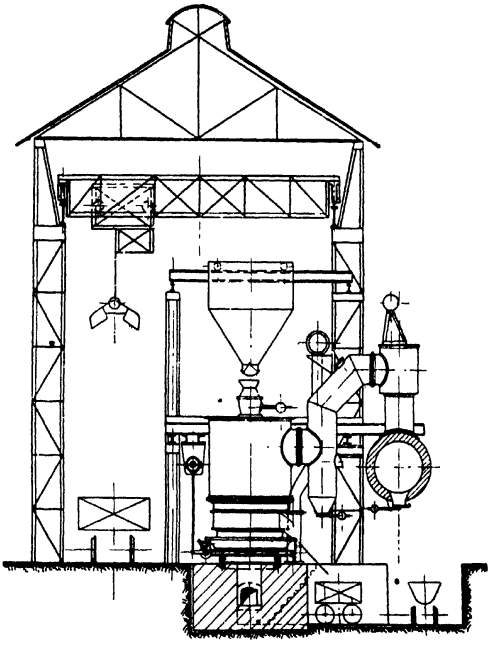

FIG. 248.—BATTERY OF MECHANICAL GRATE PRODUCERS (THYSSEN).

thus causing dust to settle out, which is removed at week ends from the leg of the dust separator.

Fig. 247 is a photograph of a battery of mechanical grate gas producers. Each producer is supplied with a separate flat plate coal storage hopper which is mainly supported from the roof trusses. The coal is distributed into the various bunkers by a scraper or spiral conveyer. The dust-separating boxes and the hot gas main are contained inside the producer house, which is a steel-framed building, brick-panelled with clear openings at the base, and at the top of the walls. The shafting for driving the grates is overhead, crude access to the bearings being given by a few planks.

In fig. 248 the coal handling is shown to be effected by means of a crane and

grab. The track for the railway trucks is laid alongside the producer battery inside the house, while the hot gas main and valves are outside.

The ash bogie track also runs along the producer battery, a turn-table being arranged at each producer, so that a bogie can be pushed so close towards the ash bowl that the ashes can be discharged therefrom by gravity.

Fig. 249 shows another mechanical producer battery in which both coal and ashes are handled by the same grabbing crane. Railway trucks are run through

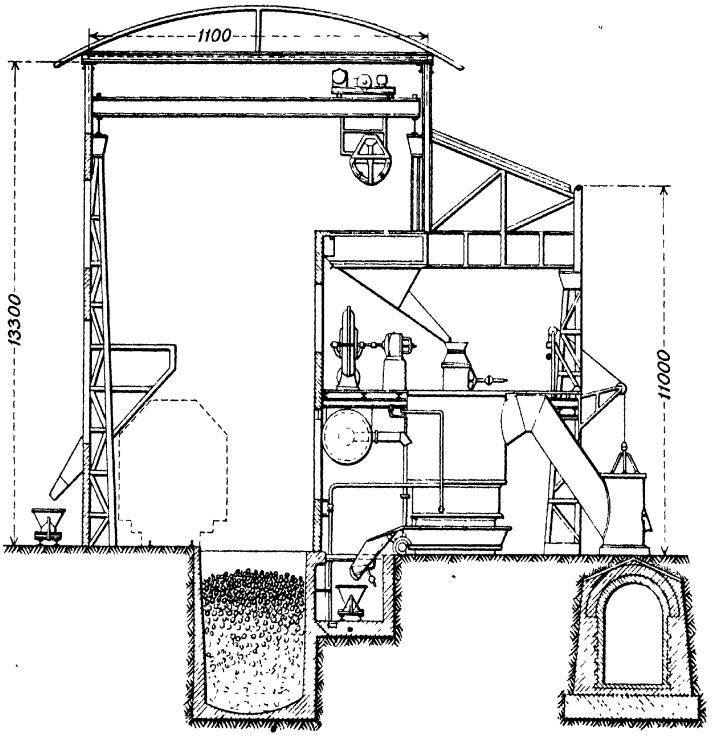

FIG. 249.—BATTERY OF MECHANICAL GRATE PRODUCERS (EHRHARDT & SEHMER).

the producer house and the coal emptied into a large underground storage, from which it is elevated by the grab to overhead hoppers.

An arrangement of bunkers such as is shown in this figure cannot be recommended for a static coal feed and fuel of uneven grading, since in running down the inclined spout from the bunker to the hopper, coal "trimming" will take place. The right-hand side of the producer will obtain the larger pieces of fuel and the fuel bed resistance will consequently be uneven.

A continuous ash track is run below ground level, thus enabling the ashes to

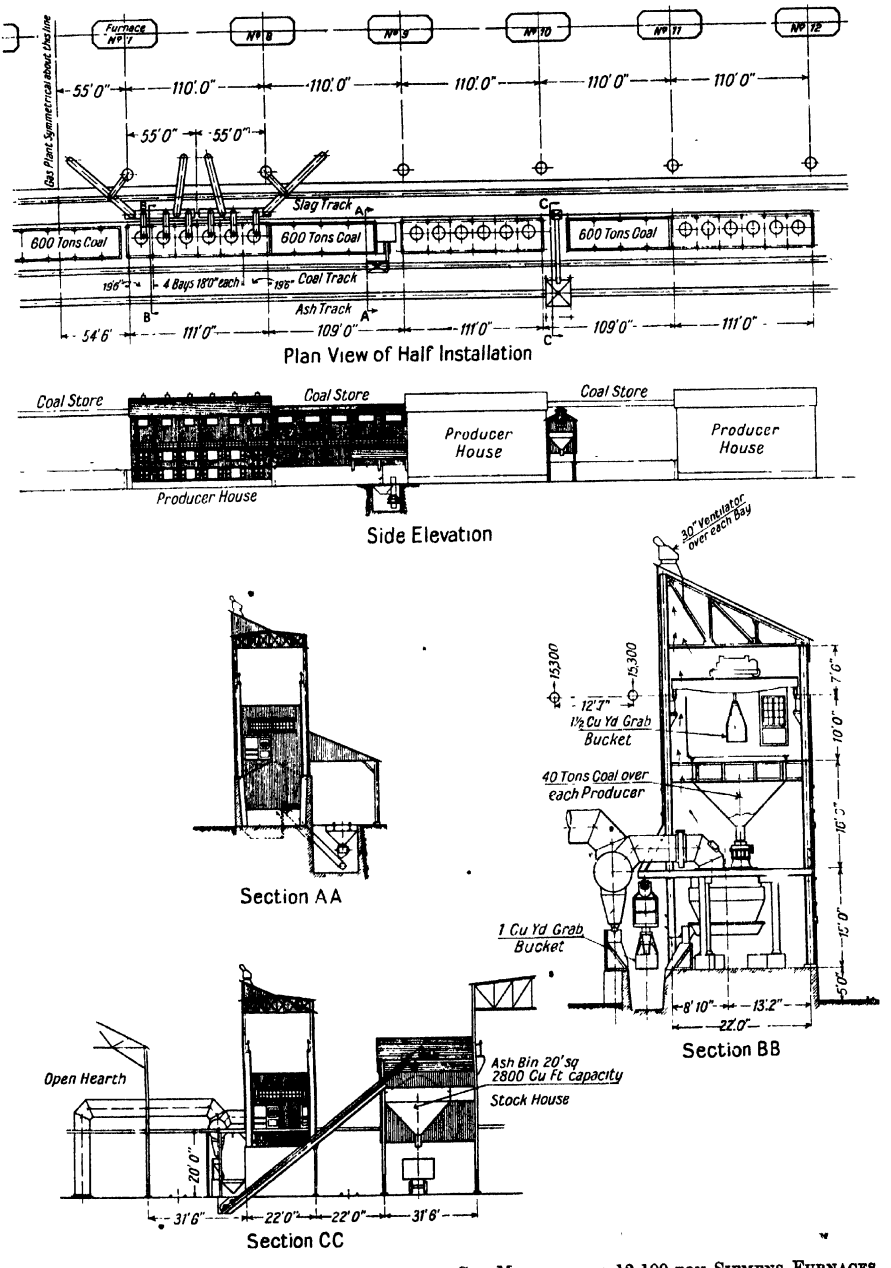

FIG. 250.—ARRANGEMENT OF MORGAN PRODUCER GAS MACHINE FOR 12-100 TON SIEMENS FURNACES.

be discharged directly from the ash bowl into the small bogies, which may be arranged for side tipping at one end of the battery into an underground ash bunker similar to the coal bunker, from which the grabbing crane discharges the ashes into railway trucks.

Instead of handling the ashes in bogies, arrangements of ash conveyers of the scraper type are sometimes adopted, or the ashes may be washed away by water running in a trough alongside the producers.

The particular design of gas downcomer pipe is one which is not likely to be blocked up by dust, which will mainly deposit in the underground gas flue.

Fig. 250 serves as an example of the arrangement of a very large producer gas installation.

The design shown refers to a plant consisting of thirty-six Morgan producer gas machines (fig. 143), used in connection with twelve 100-ton open hearth furnaces. Half of the plant is shown on this drawing, it being symmetrical about the centre line. At the top in plan are six of the open hearth furnaces and eighteen machines in three houses of six each. Between each producer house is a ground storage bin, holding 600 tons of coal, giving storage on the ground of 3000 tons. In addition to this there is a 40-ton bin over each producer, making a total storage of 4440 tons. This plant, when all the furnaces are operating, will consume thirty tons of coal per hour, so that there is approximately a six-days' storage capacity.

Coal is delivered on the track next to the gas producer house, and dumped into track hoppers, from which it goes through crushers and is deposited at the end of the storage bins. (See section A-A.) The ashes are taken away on the outer track.

Coal is charged to the bins over the producers by grab bucket cranes (section B-B) running on tracks extending the full length of the plant. These grab buckets take the coal after it has been crushed and deliver it to the bins over the producers or to the storage bins. They also reclaim the coal from the ground storage when more is being consumed in the producers than is being delivered to the works.

The gas offtake pipe from each producer is 48″ diameter, with 4½″ thick fire-brick lining, *i.e.* 3′ 3″ inside bricks. The main gas pipe is 6′ diameter and provided with gates at the bottom, discharging the dust and soot into a trough running the full length of the building. The ashes are also spouted into this same trough, where they mix with the soot and are both handled with a grab bucket telpher. This delivers them by means of an inclined skip hoist to a large ash storage bin over the ash track. (Section C-C.)

A partition extends from the top of the coal bin above the gas outlet side of the producer, while the roof truss with ventilators above also carries a partition. These partitions form a flue which draws any gas fumes, escaping from the producer, out of the building. The space on the other side of the overhead bin is sealed, to prevent a downward current of air, which would fill the operating floor with gas fumes.

CHAPTER V

GAS CLEANING AND COOLING PLANT TYPES

As it leaves the outlet branch on the gas producer the gas is hot and contains as impurities tar, soot, dust, moisture, and (if of the by-product type) also ammonia. For many purposes such a hot crude gas cannot be used efficiently, because the impurities in the gas would interfere with the operating results of the machine or plant using the gas. Thus we see that the purpose of the gas, or the use to which it is put, will decide whether cooling and cleaning are required.

Further, the gas may contain valuable by-products which are to be recovered, and since this cannot be efficiently carried out unless the gas be cooled, by-product recovery plants always supply cold gas.

When gasifying moist fuels the crude gas may be so heavily laden with moisture that if the gas were burnt in its crude state it would generate less heat in a furnace than if it were previously cooled and the moisture condensed out; the reason being that the said moisture represents an inert gas of large specific heat which will decrease the temperature of combustion and thus lower the furnace efficiency.

These are some of the main reasons for cooling and cleaning producer gas, but whether the gas be consumed in its hot raw state or not, it must (except in the case of semi-gas-fired furnaces) be conveyed from the producer to either the furnace or the cleaning plant. Previous to describing in detail the various plant designs employed for cooling and cleaning the gas, we shall touch upon some of the means for handling the hot crude gas as it issues from the producer.

GAS MAINS

If the gas is to be conveyed directly to a furnace for burning, its *sensible heat* should be conserved as much as possible, hence all such gas mains should be lined with firebrick. Although, if the gas is to be cooled, the sensible heat content is a factor of no importance, the gas sometimes leaves the producer at such a high temperature that the mains require lining to protect the metal against the heat.

Since a drop in temperature of 50° C. of the gases leaving the producer means that one ton of coal is lost per 100 tons gasified, the brick-lining and heat protection of a hot gas main is not a matter which should be classified as of secondary importance. It is not unusual to find works in which the protection of steam supply

pipes for the gas producer against radiation loss is carefully attended to, nor to find that bonuses are paid to gas producer men if the carbon content of the ash is kept low, yet even in such works an inefficient lay-out of, or the provision of inadequate lining for, the hot gas mains might be the cause of a larger thermal loss.

As a general rule it should be said that the brick-lining of a hot gas steel pipe should never be less than $4\frac{1}{2}''$, and the pipe should be supported at frequent intervals to prevent deflection. For gas to be supplied cool a 2″ to 3″ thick lining will, however, be quite satisfactory.

In many works it is possible to conduct the gas from the producer plant to the furnaces in *underground brick-flues*, thus avoiding the exposure of the surface of the gas conduit to the atmosphere. Sometimes the underground flues are not as accessible for cleaning as the overhead mains, although this is by no means always the rule. Per unit of flue area an underground brick flue is cheaper to build than an overhead steel one. But in swampy or water-logged soils overhead mains are preferable, not only because the gas is cooled by the moisture it would thus pick up in an underground main, but also because the water may trap the gas.

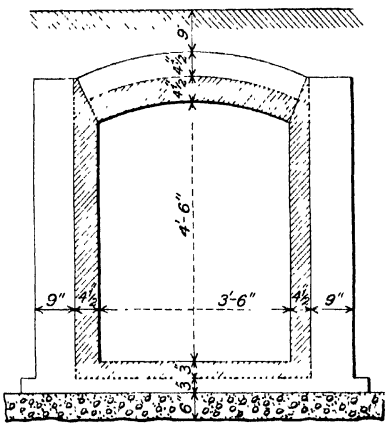

FIG. 251.—UNDERGROUND GAS FLUE.

Fig. 251 shows by way of example an underground flue 3′ 6″ wide by 4′ 6″ deep, with arched crown. It consists of $4\frac{1}{2}''$ thick firebrick sides and crown and 3″ thick firebrick base surrounded with red brick, the walls being 9″ thick, the crown and base $4\frac{1}{2}''$ and 3″ respectively. The rise of the arch may suitably be 1 in 8 or 1 in 10. The flue bricks should rest on a concrete slab, while the red brick walls and crown should be plastered with cement mortar to keep out moisture as far as possible.

The *sizes* of hot gas pipes and flues vary considerably according to the type of plant. The limiting factors are first cost, possible cleaning provisions, and the pressure it is permissible to lose by the gas flow.

For instance, some mains and flues can only be opened up for cleaning every week end, and consequently they must be amply large so that space is left for the soot and dust to deposit without causing an undue pressure loss.

In some works the gas has to travel through very long flues, which must be of ample size if a high gas pressure on the producer top is to be avoided. (When using steam jet blowers for supplying the air blast the steam quantity always increases with the pressure and thus the gas may contain more hydrogen the higher the gas pressure.) Furthermore, from the point of view of leakage losses, the crude gas pressure should always be maintained as low as possible.

For suction gas plants worked off the gas engine it is of importance to maintain

the gas pressure loss as small as possible, while for a power-blown producer it does not matter so much if a reasonable pressure loss does exist in the gas mains.

Again, if dust is to be settled out from the gas in its hot state, it should travel at a low velocity, which, on the other hand, favours radiation loss, due to the increased time factor.

An underground brick gas flue should generally allow for a maximum gas velocity of 8 to 10 ft. per second, or, say, 15 to 12 sq. ft. of area per ton of good bituminous coal gasified per hour. No gas flue should, however, be so small that a man cannot creep through it; the minimum size is thus about 1′ 6″ wide by 1′ 6″ deep.

The hot gas pipes on a suction gas plant are often dimensioned on a gas velocity of 15 ft. per second.

The gas outlet pipes and valves on some of the mechanically poked American gas producers of high duty have gas velocities of over 20 ft. per second.

The gas velocity in the hot gas pipes and super-heaters of by-product recovery gas plants is of the order of 30 to 40 ft. per second.

The velocities mentioned above are actual velocities (not "theoretical" velocities reduced to N.T.P.). The following calculation will show the difference :—

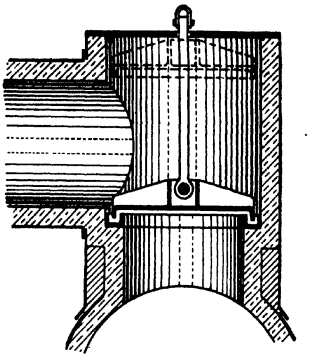

FIG. 252.—SAND-SEALED DISC VALVE.

Let the gas volume (N.T.P.) produced per kg. coal be 3·5 cub. m. (56 cub. ft. per lb.), while the crude gas contains 50 gr. of moisture per cub. m.; then the volume at 600° C. (1112° F.) is calculated as follows (the small volume of the tar vapours being eliminated).

Volume of gas at 0° C. and 760 mm. Hg. . . . = 3·5 cub. m.
Dewpoint of gas . . . . . = 36° C.
Volume of gas and moisture at 36° C. and 760 mm. Hg.,
(see Table 67) 1·2023 × 3·5 . . . . . = 4·21 cub. m.

$$\text{Volume of crude gas at } 600^\circ \text{ C.}: 4{\cdot}21 \times \frac{600+273}{36+273} = 4{\cdot}21 \times \frac{873}{309} = 11{\cdot}9 \text{ cub. m.}$$

i.e. the hot crude gas occupies at 600° C. a volume 3·4 times as large as that of the gas if cooled to 0° C.

GAS VALVES, EXPLOSION DOORS, AND DAMPERS

It should be possible to isolate each gas producer from the hot gas main; the valves used for this purpose are either of the mushroom (disc) type, figs. 252-254, or of the flat plate (damper) type (figs. 256-258).

Fig. 252 shows a sand-sealed disc valve. A flat ribbed hematite iron or cast

steel plate with a circumferential ledge is arranged to fit into an annular cup which is filled with sand. The valve plate is pinned to a vertical rod connected to an outside chain or rope, whereby the valve may be opened or closed when required.

Fig. 253 shows a mushroom valve in which the valve seat is made a metal to metal joint, an explosion door or hand hole is placed on the brick-lined valve casing immediately above the valve seat, thus enabling cleaning to be carried out. In many cases this door is made of such a size that the valve disc or seat may be removed through it for repairs or replacement. The valve disc is brick-lined on the under side to protect it against warping, while the upper

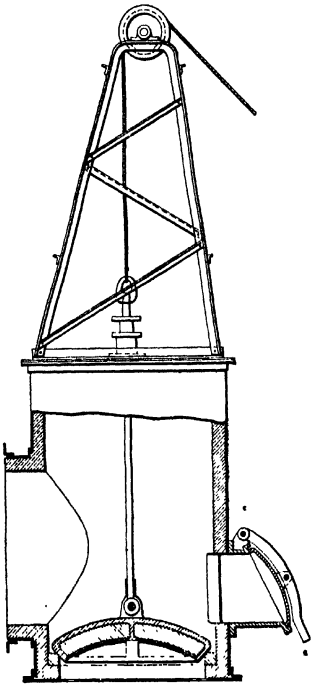

FIG. 253.—MUSHROOM VALVE

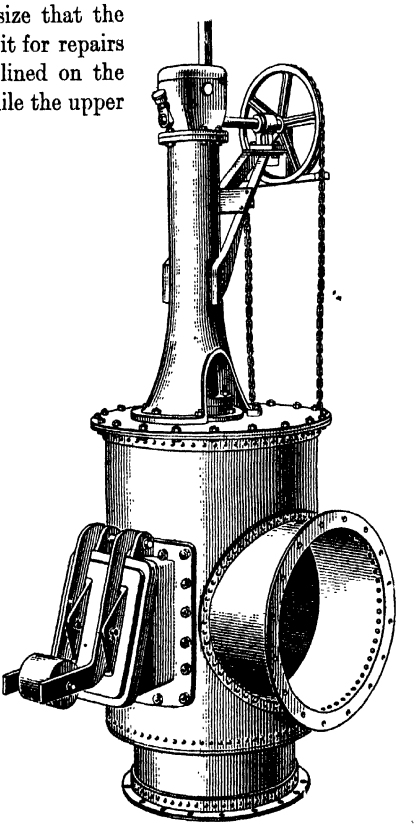

FIG. 254.—MUSHROOM VALVE.

end of the valve casing is extended sufficiently to remove completely the disc out of direct contact with the hot gases which flow through when the valve is open.

The valve rod is provided with a stuffing box at the top which may be empty (when dealing with bituminous coal), or packed with asbestos rope (when dealing with less volatile fuels). The rope for opening the valve is taken over a pulley at the top, the weight of the valve being balanced by counterweights or the rope passed over a winding barrel.

Fig. 254 shows a photograph of a mushroom valve which is opened by rack

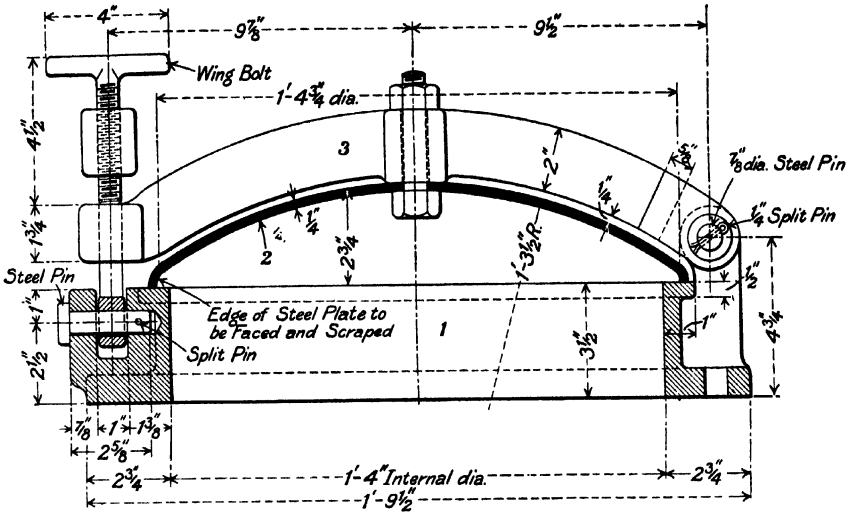

FIG. 255.—EXPLOSION DOOR.

and pinion, the latter being revolved by a chain and chain wheel. The valve may also be opened directly by a hand wheel and external screw such as are used on many clean gas valves.

Explosion doors are provided on most hot gas valves since they serve as hand holes, but it is advantageous also to fix these on hot gas mains and flues. The object of these doors is to give quick relief in case of explosions, which sometimes take place on hot gas plants where the flues and mains are burnt out every week end. They generally consist of a cast-iron frame fixed to the main, or to the valve, the frame having a machined seat for a hinged door, which is pressed on to the seat by means of weights or a weak cast-iron pin; to ensure absolute tightness most door seats are surrounded with a ledge to enable the plastering on of wet clay.

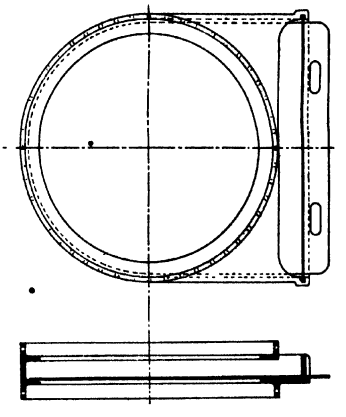

FIG. 256.—SAND DAMPER (HORIZONTAL).

Relief against explosions in clean gas piping may be effected by substituting one or more of the iron or steel blank flanges by a thin lead plate or by an explosion door with a scraped seat such as is shown in fig. 255.

Fig. 256 shows a very simple and cheap type of horizontal damper which is

often used to separate the downcomer pipe of a producer from the underground flue. It consists of a cast frame bolted to the steel casing of the pipe and provided with an opening for admitting a cast-iron or steel damper plate. When inserted the damper is maintained tight by sand, which may be shovelled up into the pipe through a door above the damper and spread over the latter, particularly at the edges.

To avoid the effect of the heat of the gas upon the shape of the damper plate

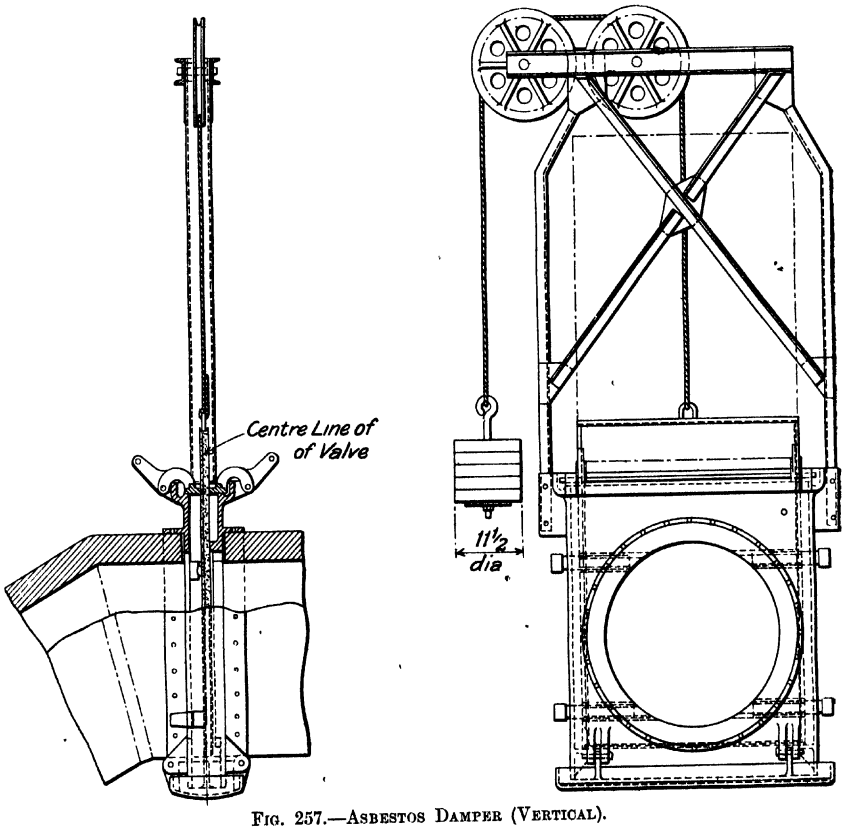

FIG. 257.—ASBESTOS DAMPER (VERTICAL).

the Wellman Company provide an asbestos plate for their gas producer isolating valves (fig. 257).

This damper, which is of the vertical type, consists of a steel casting bolted to the two gas pipe sections. On the inside of this casting is a machined valve seat, while the top and bottom are full width openings with covers which are hinged at the top to permit the insertion of the steel reinforced asbestos plate, and at the bottom to effect easy removal of tar, dust, etc. By means of four large keys the asbestos plate may be wedged firmly against the machined seat, thus

forming a gas-tight joint. Leakage to the outside is prevented by sealing the top and bottom cover plates with clay.

Fig. 258 shows the quadrant type of plate valve, such as is used on the Mond gas plant at Tipton, South Staffs.[1] It consists of two strongly ribbed castings bolted to each section of the 5′ 6″ diameter steel pipes to be separated. To reduce the size of valve plate used, the castings are made taper so that the gas in passing is consecutively contracted and expanded. The quadrant valve plate is hinged on a stout steel shaft while the circular edge carries a toothed rack to be operated by two sets of chain wheels rotating pinions geared to the rack. The plate is pierced with a hole of the required diameter which can be brought to coincide with the opening

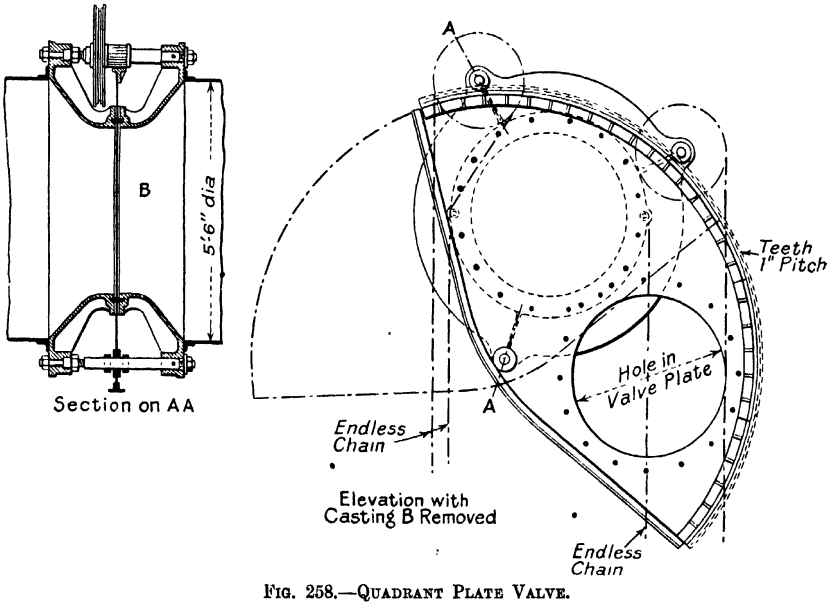

FIG. 258.—QUADRANT PLATE VALVE.

of the pipe, while by rotating the quadrant plate the solid plate portion closes the valve.

When such a valve is to be operated the two sections of body castings are forced apart by the aid of strong set screws, while the plate is scraped clean from carbon or tar deposits from poking holes, thereby making the plate so free that it can be moved to its new position. When moved the set screws are again slackened and the body castings tightened together against the plate, dove-tail shaped asbestos ring insertions existing in the opposite faces of the castings.

Although somewhat cumbersome in design, this type of valve will keep tight against gas pressures of up to 20″ water gauge.

[1] Humphrey, *Proc. Inst. C.E.*, 1912–13.

DUST SEPARATORS

To separate the dust and soot from the crude gas before it is admitted to the flues or furnace is generally accepted as most economical, not only because the furnace regenerators, flues, and pipes can remain longer at work without cleaning, but also because the dust in the gas may sometimes affect the quality of the furnace product. Apart from this, the dust may in itself be a valuable product, sometimes fetching a higher market price per unit of weight than the coal from which it is derived.

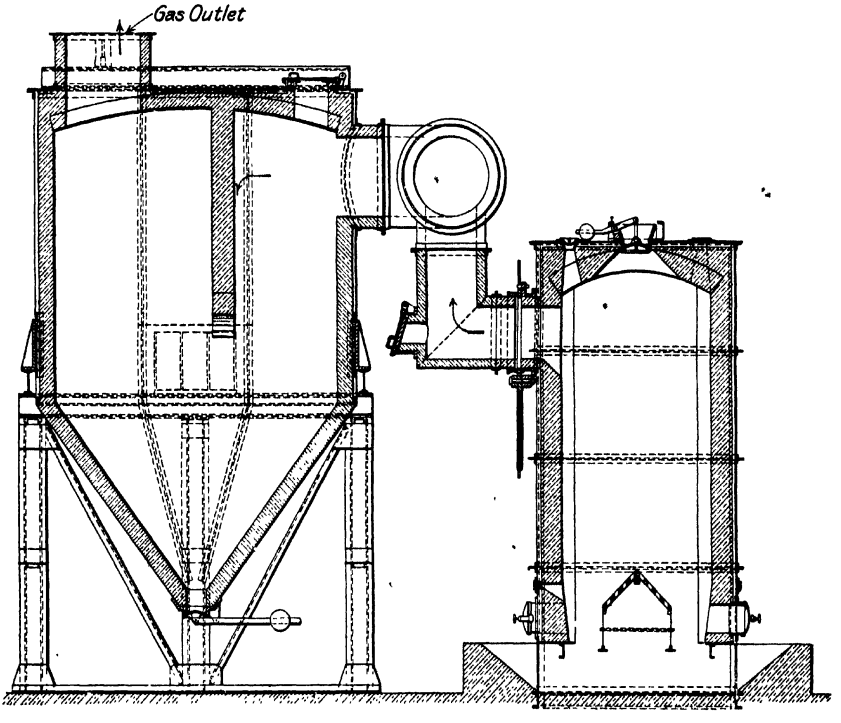

FIG. 259.—RECTANGULAR DUST SEPARATOR FOR COKE.

The quantity of dust contained in the gas depends upon the grading of the fuel and the rate of working; it may be as high as 8 to 10 per cent on the quantity of coal gasified. The main principles involved in dry dust separation are *reduced* gas *velocity, impingement* against baffles, and *change* of *direction.*

It is clear that the slower the gas velocity, the smaller becomes the dust-carrying power of a gas, but the smaller the dust particles, the longer does it take them to settle out, consequently vessels of an enormous size are required if complete separation is to be effected in this way. Generally speaking, however, an efficient dry dust

separator will remove about 60 to 80 per cent of the total dust and soot in a producer gas.

Fig. 259 shows a rectangular dust separator working in conjunction with a Duff producer using coke, at the Vienna Gas Works,[1] which combines the three main principles of dust separation. The separator is brick-lined not only to prevent radiation loss, but also to prevent erosion by the hard coke dust impinging on the steel plates. The gas is baffled on entry against a transverse brick wall, then flows in a downward direction below the lower edge of the arch supporting this wall, thence upwards towards the gas outlet. Dust is removed at the base from time to time.

Fig. 260 shows a photograph of a circular dust separator for a large gas producer.

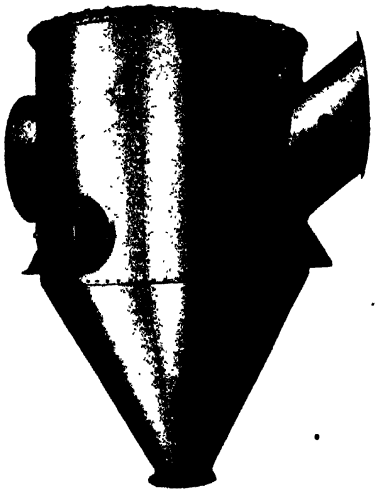

Fig. 260.—Circular Dust Separator.

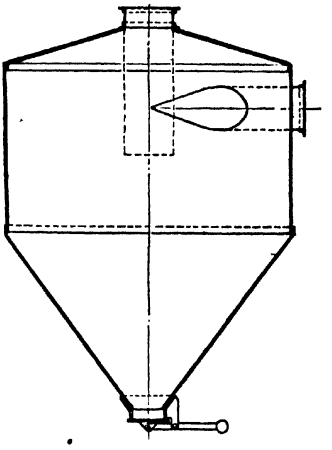

Fig. 261.—Cyclonic Dust Separator.

It will be noticed that the inlet pipe is not horizontal but inclined, which, just as in blast furnace practice, is the best way to arrange gas mains for dusty gas.

Fig. 261 shows the cyclonic dust separator, which probably is the most efficient design, when the weight of material involved for the same amount of dust separation is borne in mind. The gas leaving the producer enters the vessel in a tangential direction, thus causing an impingement of the dust particles against the side walls, which sometimes are provided with vertical flat bars or angles to cause further baffling. The dust settles out in the conical base, while the gas leaves at the top. Sometimes the gas outlet pipe is provided with an internal extension (see dotted lines) so as to maintain the gas longer in the separator; so long as this internal pipe does not reach too near the base there will be no danger of the deposited dust being again picked up by the gas.

[1] Marischka, *J. f. Gas. u. W.*, April 13, 1912.

The velocity of the gas in efficient dust separators of the slow velocity type should be about one foot per second, and the time the gas is maintained in the vessel about 5 to 10 seconds, depending upon the particular design employed.

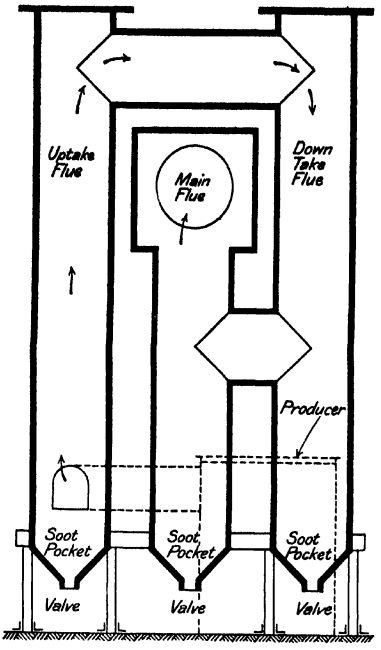

FIG. 262.—BAFFLE TYPE DUST SEPARATOR.

Everybody who has been concerned with the cleaning of gas flues for dust and soot will have had the experience that wherever the gas changes its direction dust will be deposited. Methods based on this principle, shown in fig. 262, are employed by the Reading Iron Company.[1]

The crude gas from three producers enters a vertical uptake flue, thence into a downtake flue, and from this in an upward direction into the main flue. Each of the vertical pipes is provided with soot and dust pockets from which the dust separated by baffling can be removed.

By adopting a similar arrangement in connection with an 8′ internal diameter Chapman mechanical producer gasifying 1500 lbs. of Westmoreland gas coal per hour, 4600 lbs. of dust and soot were separated during a working week of 132 hours, *i.e.* dust separated = 2·3 per cent on coal. The specific gravity of the dust was 500 lbs. per cubic yard (sp. gr. = 0·295) while the analysis was :—

Sulphur	1·0	per cent.
Moisture	0·77	,,
Volatile combustible	0·18	,,
Fixed carbon	78·71	,,
Ash	17·34	,,

Heating value B.T.U./lb., 12,184.

CLEANING OF MAINS AND VALVES

The *cleaning out* of horizontal hot gas mains may be carried out by daily scraping by hand into soot and dust outlet openings placed, say, every 5 to 10 feet along the pipe, or an internal chain or rope with scraper plates may be pulled along the base of the pipe scraping the dust into one or more vertical dust pockets. In most cases of hot gas pipes for furnace works the mains are burnt out, or blown clean, every week end, when the works are shut down.

Iron Trades Review.

"Burning out" of the gas mains takes place by letting a current of air pass into the main, the hot dust and soot thus igniting and burning to ashes. The draught for this purpose is generally obtained by opening a by-pass main at the furnace to the chimney stack while the air is let in at the explosion door or cleaning-hole farthest away from the chimney. The ash left after burning out the soot and dust may be blown out by steam or air jets.

Where cleaning of horizontal mains cannot be effected during week-end shut-downs because the producer plant is worked continuously, the lay-out of the pipes must be such that every part can be cleaned during operation; all pipes should be inclined, with dust pockets at the lower ends, dust separators installed, or, in the case of cold gas plants, the gas taken as directly as possible into a washer.

THEORY OF COOLING GAS

In practically all cold producer gas plants the gas is cooled and cleaned by *direct* contact with the cooling liquid (generally water). Only in very few cases has the gas been cooled indirectly, either in atmospheric cooling towers or in water-cooled towers or in water-cooled tubular condensers such as are used in, say, town's gas practice. Very few, if any, of the indirectly cooled plants have been successful, mainly because insufficiently large cooling surfaces were provided. On the other hand, if amply dimensioned indirect cooling plant were installed the capital outlay required would be prohibitive, in any case with the present designs of indirect cooling apparatus.

The rate of heat transmission in tubes between cold water and gas or air is only a small fraction (about one-fiftieth) of that of surface condensers for steam, while the rate of heat transmission between water and gas in direct contact is practically instantaneous, similar to the condition existing in a jet condenser for steam.

Direct cooling of the gas has certain disadvantages for volatile fuels in so far as the tar when separated from the cooling water is often emulsified with water, and the production of ammonia-liquor on a by-product recovery plant is excluded. Such considerations are, however, of minor importance when it is borne in mind that when producing the same amount of heat in gaseous form, and cooling the gases indirectly, it is necessary to install three times as large an indirect cooling plant for producer gas as for town's gas. As it is, a cooling plant on the direct principle may be built for about one-third the cost of an indirect one dealing with the same quantity of gas.

The direct cooling of a gas by means of water may be assumed to take place in two stages: (1) the cooling of the gas from its initial temperature until it reaches its dewpoint, and (2) the cooling of the gas saturated with moisture to the desired or possible end temperature. When the complete cooling is carried out in one vessel these two stages cannot be definitely separated in practice as they more or less merge into one another.

To pass through the first stage very little time is required, part of the cooling water, due to the high temperature difference, being practically "flashed" into

steam, thereby the cooling of the gas becomes an exchange of its sensible heat for latent heat in the shape of additional moisture content. By this process of heat exchange the total heat of the gas (with its moisture) remains unaltered, thus no actual heat absorption from the gas has taken place.

To pass through the second stage (the actual cooling or heat abstraction stage) a very much longer time is required, since the temperature difference between cooling water and gas is generally small. The necessary length of time will depend on the quantity of cooling water used and the permissible temperature difference between the cooled gas leaving and the cold water entering, which on a well-designed plant should never exceed 5° C. The amount of moisture which was evaporated from the cooling water in the first stage is condensed out in the second stage.

The quantity of water used for cooling will obviously determine the temperature difference that will exist between the gas and the water at the point when the former becomes saturated. In laying down the cooling water consumption of a plant this temperature difference may for a good design of gas cooler be assumed as not less than 15 to 20° C.

For a given type of cooler the size to be used depends upon the amount of heat to be abstracted from the gas in cooling. When the operating conditions such as gas composition, temperature, and initial moisture content of the crude gas be known then its total sensible heat content per cubic metre dry gas at N.T.P. is easily obtained from the curves given in fig. 18, p. 64.

If this heat content be divided by ·6 (kg. cals./gr.) we obtain the number of grammes of water vapour per cub. metre which will contain the equivalent amount of heat, and if we add to this figure the moisture content in the crude gas we obtain, by the aid of Table 67, p. 370, the corresponding saturation temperature of the gas.

Let us illustrate this by an example :—

Assume operating conditions as per Example 4, Table 25 (p. 68).

Gas Analysis.

CO_2	11·0 per cent.	Gas outlet temperature	= 400° C.
CH_4	3·3 ,,	Moisture in crude gas in grammes/cub. m.	= 150.
CO	17·5 ,,		
H_2	21·5 ,,		
N_2	46·7 ,,		

Total *sensible* heat in 1 cub. m. gas (dry at N.T.P.) cooled from 400° C. to 0° C. = 156 cals.

Equivalent weight of moisture evaporated $= \frac{156}{\cdot 6} = 260$ grammes.

Add moisture originally present in crude gas . = 150 ,,

Total moisture in saturated gas . . . = 410 grammes per cub. m. gas (N.T.P.)

Corresponding saturation temperature about 72° C.

Note.—This calculation, although quite satisfactory for practical purposes, is not theoretically correct, in so far as the total sensible heat between 400° C. and 0° C. has not been completely abstracted, since the gas has only been cooled to 72° C., the total

amount of heat units abstracted being about $156 \times \frac{400-72}{400} = 128$ cals. On the other hand, the latent heat of evaporation of water at 70° C. is 0·557 kg. cals. instead of 0·6, thus making the equivalent amount of moisture evaporated $\frac{128}{\cdot 557} = 240$ gr. instead of 260 gr., the total amount of moisture in the gas of $240 + 150 = 390$ gr. per cub. m. being equivalent to a saturation temperature of about 71½° C.

The amount of *cooling water* required to cool the gas to say 20° C., with a water supply of 15° C., may then be estimated as follows :—

Heat to be abstracted from gas :	
Sensible heat in crude gas	= 156 cals.
Latent heat in moisture in crude gas = $150 \times 0{\cdot}6$	= 90 ,,
Total . . .	= 246 cals.
Let end temperature of water be 72 − 20 . .	= 52° C.
Then the heating range for the water . . .	= 52 − 15 = 37° C.

or

$$\text{Cooling water} = \frac{246}{37} = 6{\cdot}65 \textit{ kg. per cub. m. (dry at N.T.P.).}$$

In *Bureau of Mines Bulletin*, No. 109, R. H. Fernald reports the water consumption of several American producer gas plants to vary between 6·8 and 20·6 cub. ft. per 1000 cub. ft. of gas made, the average of all plants being 14·2 cub. ft. per 1000 cub. ft., or 11·2 *kg. per cub. m. of gas, i.e.* about double the above calculated figure. It is stated, however, that in many plants water costs were so insignificant that a saving in the quantity used was not regarded as important.

An average operation figure for water consumption in this country on anthracite producer gas plants for driving gas engines is 2 to 2½ gallons per B.H.P. hour. If 2 cu. m. of gas be used for B.H.P. hour these consumption figures represent :—

$$4{\cdot}5 \text{ to } 5{\cdot}6 \begin{cases} \text{kg. of water per cub. m. of gas,} \\ \text{or} \\ \text{cub. ft. of water per 1000 cub. ft. of gas.} \end{cases}$$

The above figures refer to conditions where cheap fresh water is available for cooling ; if this is not the case and a water-cooling plant with circulating pumps is to be installed, it is advisable to increase the capacity of the pumps and cooling tower to at least 50 per cent larger capacity than these figures, while water-cooling plants and pumps using tarry water (from a bituminous coal) should be still more amply dimensioned.

Speaking generally, it is always advisable to determine the minimum water consumption by calculation, since local conditions and fuel qualities alter with each particular installation.

To facilitate calculations regarding the heat exchange when cooling gases, Table 68 has been prepared ; the results of the same being shown on the curves in fig. 263.

TABLE 68

TOTAL HEAT OF GAS (90 PER CENT DIATOMIC) SATURATED WITH WATER VAPOUR

Temperature $t°$ C.	Grms. of Water Vapour absorbed by 1 M.³ Dry Gas (N.T.P.) when saturated at $t°$ C. and 760 mm.	Total Heat of Water Vapour at Temperature $t°$ C.	Total Heat in g. Gms. Water Vapour between 0° and $t°$ C.	Sensible Heat in 1 M.³ Dry Gas (N.T.P.) between 0° and $t°$ C.	Total Heat of Saturated Mixture of Gas and Water Vapour per M.³ Dry Gas at N.T.P. between 0° and $t°$ C.
	g. Grms.	Cals./Kgm.	Cals.	Cals.	Cals.
0	4·866	596·3	2·902	..	2·902
10	9·794	600·7	5·884	3·206	9·09
15	13·64	603	8·225	4·812	13·04
20	18·81	605·2	11·384	6·419	17·81
25	25·69	607·4	15·605	8·028	23·63
30	34·80	609·6	21·216	9·638	30·85
35	46·81	611·8	28·642	11·25	39·89
40	62·60	614·05	38·44	12·86	51·30
45	83·38	616·27	51·385	14·47	65·85
50	110·78	618·44	68·51	16·086	84·60
55	147·17	620·61	91·33	17·7	109·03
60	196·02	622·7	122·08	19·31	141·4
65	262·77	624·8	164·2	20·98	185·2
70	356·41	626·9	223·47	22·55	246
75	493·04	629·1	310·17	24·16	334·3
80	704·79	631·2	444·88	25·78	470·7
85	1066·5	633·2	675·33	27·40	702·7
90	1802·7	635·2	1145·11	29·02	1174·1
100	∞	..	∞	..	..

This table gives in the last column the total heat in cals. (per cub. m. dry gas at N.T.P.) to be abstracted from a saturated gas and steam mixture when cooled from its saturation temperature to 0° C.

The bases of calculation for the figures given in the table are the following :—

(1) Gas containing 10 per cent $CO_2 + CH_4$.
(2) Partial steam pressures as per Table 67.
(3) Total heat in water vapour, *i.e.* latent heat of steam plus sensible heat of water, as per Marks & Davis steam tables.

Regarding (1), it should be observed that since the sensible heat content of the

gas itself is such a very small proportion of the total heat, the table and curves will for all practical purposes apply to *air*, or to gases containing up to say 20 per cent of total CO_2 and CH_4.

Regarding (3), it should be observed that although the condensation of the steam progresses successively as the mixture is cooled, it has been assumed that total condensation takes place at the saturation temperature; for this reason the total heat figures are slightly on the high side, but only to a degree that is of no

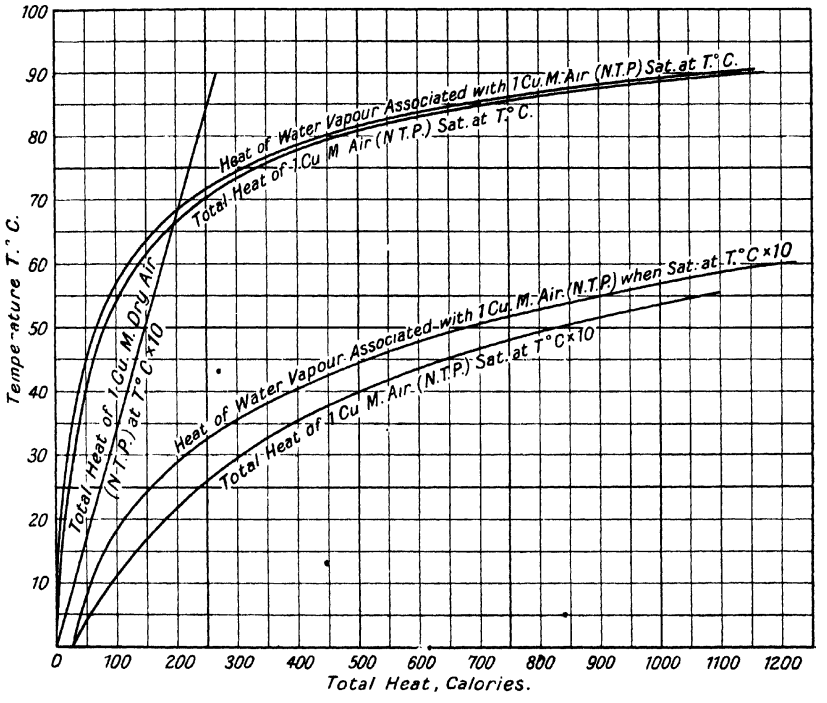

FIG. 263.—TOTAL HEAT CONTENT IN SATURATED GAS AND STEAM MIXTURES.

importance for practical work. For indirect cooling methods this point is, however, of importance, since the coefficient of heat transfer will differ for the cooling of super-heated steam or of condensate from that required for condensation only.

TYPES OF COOLING AND CLEANING PLANT

The plant used for cooling and cleaning producer gas must be designed so as not only to fulfil the thermal requirements, but simultaneously to fulfil the duty of removing impurities or recovering in a proper state the by-products from the gas.

We may therefore divide the gas treating plants into three classes, depending mainly upon the quality of the fuel it is intended to use, viz. :—

1. Clean fuels low in volatile constituents.
2. Dusty fuels and tar producing fuels.
3. Fuels suitable for by-product recovery.

1. Cooling and Cleaning Plants for Clean Fuels Low in Volatile Constituents

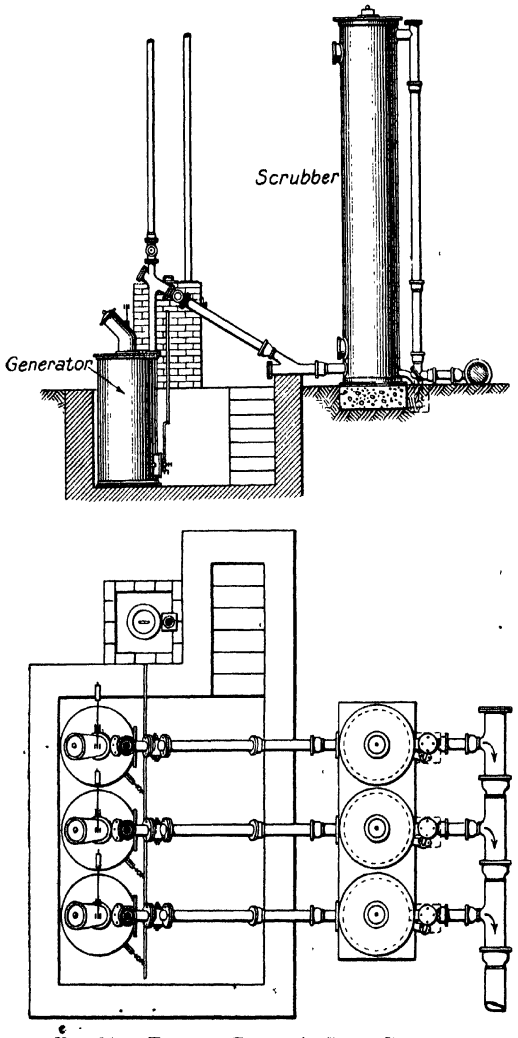

Fig. 264.—Emerson Dowson's Clean Producer Gas Plant.

Under this heading come producer plants using coke, charcoal, or anthracite of reasonably even grading but free from dust.

The first successful gas cooling plant of this type was that built by J. Emerson Dowson about 1880; this plant is shown in outline in fig. 264.

It consisted of a pressure blown dry bottom gas producer with flat grate, the hot crude gas from which was taken in a downward sloping pipe into the base of a scrubber packed with coke. The gas was passed in an upward direction through this coke, while fresh water was supplied and distributed over the top of the coke; the cooling was thus on the counter-current principle.

Except for a few modifications in details, most modern plants using a first-class anthracite (mainly suction gas power plants) are designed on the same principle (see figs. 265-267).

Fig. 265 shows the National suction gas plant. Gas from the producer enters the base of the scrubber through pipe 3 and is bubbled through a small water seal before it passes through the inclined cast iron or steel grid carrying the filling, which may be coke or wood grids.

The water is distributed at the top of the scrubber by means of an annular water trough, while the gas leaves through a central outlet pipe on the top plate and is passed directly to the gas engine, a small expansion box being provided close to the latter. All bends or horizontal pipes are provided with hand holes for cleaning.

To maintain the seal of the luted gas inlet pipe to the scrubber at a constant level, or to allow for adjustment of the level, a special water outlet pipe 19 is provided, the lower end of which, 18, is sealed in a tank in the foundations.

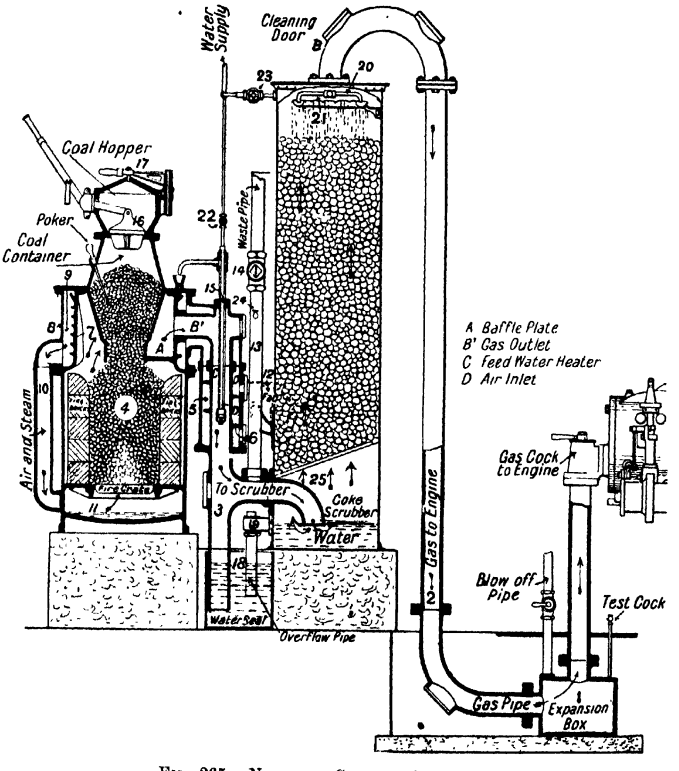

FIG. 265.—NATIONAL SUCTION GAS PLANT.

When starting up the gas producer the gas is blown to waste through the waste gas or purge pipe 6 provided on inlet branch 3; when the gas is of sufficiently good quality this purge pipe is closed and the foul gas which possibly may be contained in the scrubber, cold gas piping, and expansion box is blown to waste at the small blow-off pipe placed at the top of the latter. To enable the quality of the gas to be judged, a small test cock or test burner is also provided on the expansion box; when the flame shown here is satisfactory the gas is ready for use.

Regarding the supply of purge pipes or chimneys, it is necessary to have o not only on the producer outlet, but also at the outlet pipe from the cooling plan since, when shutting down, the gas in the coke scrubber may contract during tl shut down period, thus making it possible for air to be sucked into the scrubber ar pipe system.

Fig. 266 shows a photograph of the Crossley suction gas plant. Except that tl coke filling is arranged in two separate layers the principle of gas cooling employe is very similar. Four cleaning doors are provided at the side of the scrubber, tv

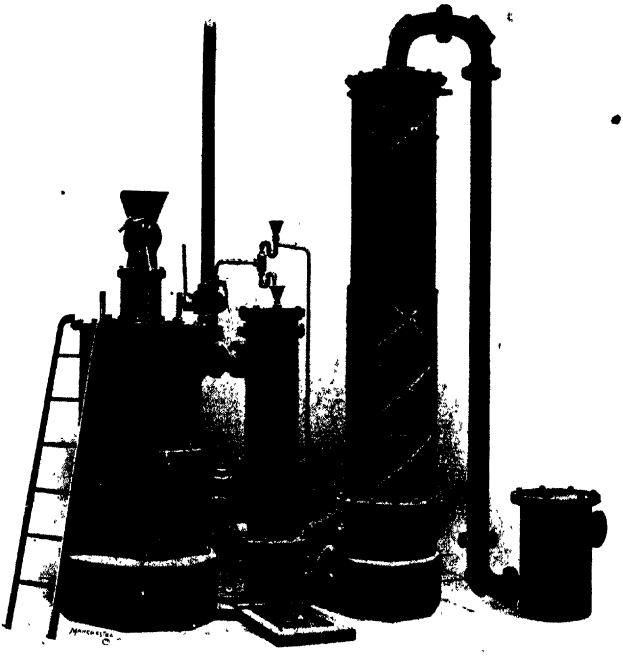

FIG. 266.—CROSSLEY SUCTION GAS PLANT.

for each coke layer; such an arrangement is found convenient in cases where th impurities in the gas (slight amount of dust) cause blockages of the coke interstice or the grid in the lower part, since it enables the lower dirty layers to be replace without disturbing the upper and cleaner layer.

Fig. 267 shows the scrubber used on the Sharp-Basset (U.S.A.) suction ga producers, the specific feature of which is that a small drying chamber is provide above the water spray and coke packing, thereby ensuring the separation of a entrained moisture from the gas previous to passing it to the gas engine. A centra water distributor making an umbrella-shaped spray is provided.

Other water distribution devices may be employed in addition to the annular ring described in reference to fig. 265, such as one or two transverse pipes with perforations (these may be quickly removed for cleaning), or a nozzle with suspended distributor such as is shown in fig. 268.

The control of the cooling water supply should be effected from the ground, or the regulating valve may be placed within easy reach from the gas producer top platform.

Some anthracite fuels and certain types of coke contain volatile matter which forms a slight amount of tar on gasification, in which case it is advisable to subject the gas to a slightly more elaborate treatment; examples of such types are shown in figs. 269 and 270.

Fig. 269 shows the Dowson & Mason open hearth type of suction gas plant. On leaving the gas producer the gas is cooled in a coke scrubber of similar design to those above described, but before being admitted to the engine it is passed through a scrubbing filter G, made of sawdust and shavings, which has the effect of retaining not only the entrained moisture in the gas but also any traces of tarry matter. Due to its large gas storage capacity such a filter also serves as an expansion box for the gas engine.

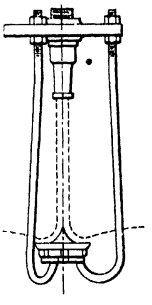

FIG. 268.—WATER-SPRAYING NOZZLE.

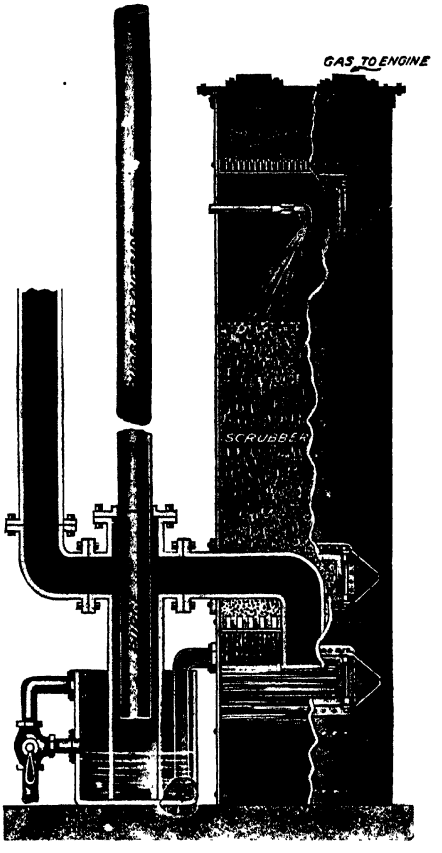

FIG. 267.—SHARP-BASSET COMBINED SCRUBBER AND DRYER.

In connection with the starting up of this plant it should be noted that this is effected by a hand-operated exhauster A (not a blower), which will suck the gas from the producer through the whole cleaning plant, and exhaust it from a point close to the engine. When the plant is out of operation, the chimney valve D is open, thus maintaining the producer fire by natural draught.

Fig. 270 shows the Power Gas Corporation's suction pressure gas cleaning plant, which may serve the dual purpose of supplying both gas engines and furnaces.

The gas is sucked off from the producer by the centrifugal fan B, which delivers the gas under the pressure required to enable suitable distribution in gas mains.

The cleaning plant consists of a coke scrubber A, the fan B, and the sawdust or wood wool dryer C. The coke scrubber is of the usual design, except that a small perforated screen E is provided at the top to prevent entrained moisture entering

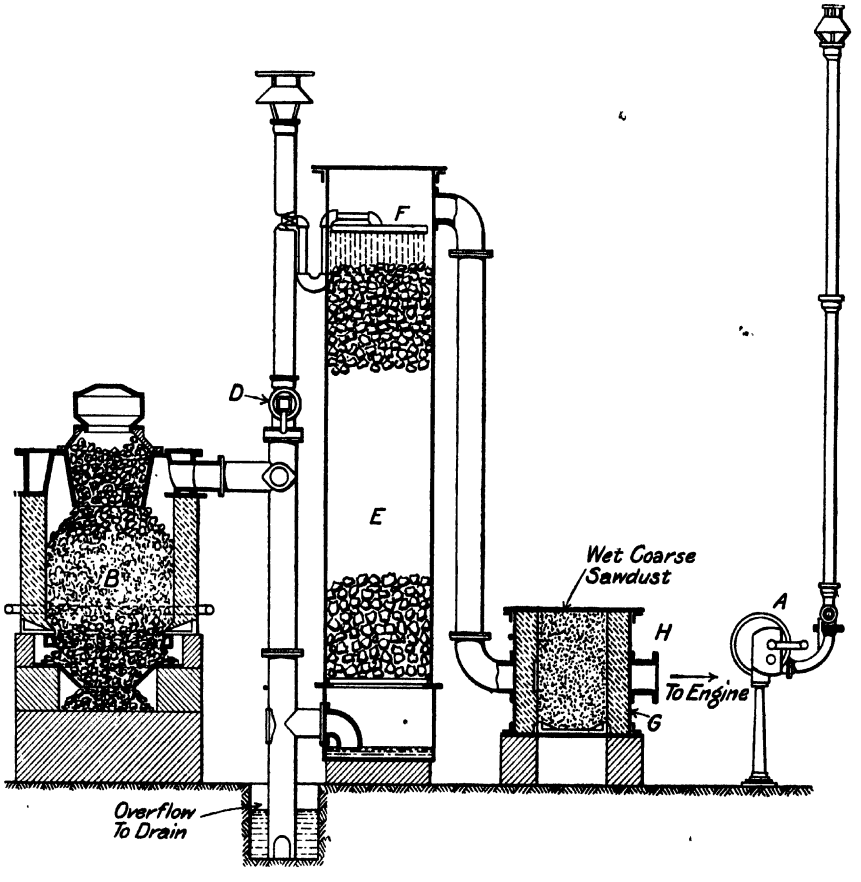

FIG. 269.—DOWSON & MASON OPEN HEARTH SUCTION GAS PLANT.

the fan B, which is also a centrifugal cleaner. The drying filter is provided with two or more separate layers of sawdust and chippings, which are always kept dense by weighted plates resting on the top of the packing. A drain is provided at the base of the filter for any liquid matter separated in the fan or the filter.

The fan B may serve for starting-up purposes, if power from another source than the gas producer plant is available, the gas being blown to waste at purge pipe G.

Fig. 271 shows the arrangement of weighting down three layers of wood wool packing by means of heavy perforated plates, such as are used in the scrubber filter of the Ruston gas producer plant.

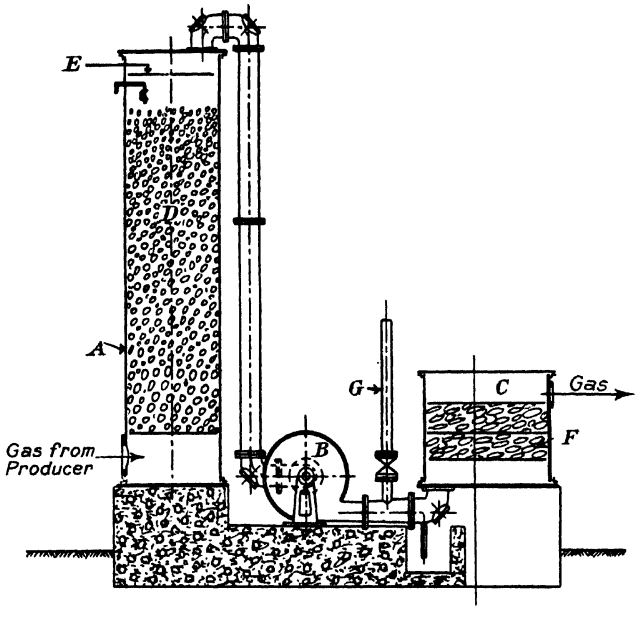

FIG. 270.—POWER GAS CORPORATION SUCTION PRESSURE GAS CLEANING PLANT.

The sawdust or wood wool packing of the scrubbing filters and dryers will gradually absorb the impurities in the gas and thus in time become fouled. The replacing of the spent material by new always occupies a little time, to avoid which the Amsler Gas Power Co. (U.S.A.) put forward a filter basket which lends itself to easy and quick removal.

FIG. 271.—RUSTON WOOD WOOL SCRUBBER FILTER AND DRYER.

Fig. 272 shows this device. To the inside of the circular body of the dryer is riveted an angle ring with machined upper face, upon which rests the basket casting provided with a corresponding machined facing. To the lower edge of the basket casting is bolted a heavy wire mesh filter box which is filled with sawdust and shavings. A transverse bar is cast into the basket ring, thus enabling a quick replacement when the top cover of the drying vessel is removed.

Although with certain first-class fuels it is not essential to provide a drying scrubber or wood wool filter, it is generally advisable to install the same, thus making

the plant slightly more flexible in regard to the use of fuels containing a trace of tar-yielding matter.

Concerning the sizes of coke scrubbers and filter dryers required for a certain rate of gasification, this will alter with the quality of the fuel and the total heat to be abstracted from the gas, and the amount of and temperature of the cooling water available.

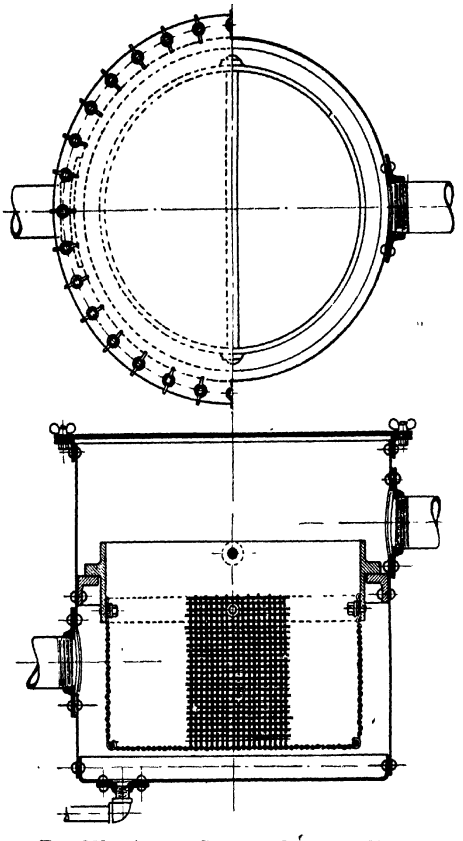

FIG. 272.—AMSLER SAWDUST SCRUBBER FILTER AND DRYER.

For purely and simply cooling a producer gas made from anthracite in a coke-packed scrubber, it will be ample for average conditions as existing in this country to let the average time factor for the gas in passing through the coke be about six seconds. The porosity of the coke can be taken as 50 per cent free space for gas contact when hard metallurgical coke of about 1″ to 2″ cube is used as packing material.

In the lower layers of the filling it is generally advisable to use the larger pieces of coke, since the dust deposits from dirty gas will then have less tendency to quickly obstruct the lower part of the tower. It is often of advantage to place the smaller pieces of coke along the steel casing of the scrubber, thus avoiding a short circuiting of the gas along the sides.

When the gas is likely to contain a large amount of dust it is advisable to provide an empty space between the coke and the gas inlet, in which the water falling down from the coke can wash out most of the dust from the gas before it enters the filling material.

Concerning the sizes of wood wool drying filters and sawdust scrubbers, the former material is quite suitable for anthracite, while the latter material, which lends itself to more dense packing, is the best for coke or anthracite containing an excess of volatile matter. "Sawdust" scrubbers are generally packed with 20 per cent sawdust round the edges, while the rest of the material is wood shavings or chippings.

The velocity of the gas through a wood wool packed filter or dryer may be taken as 5″ per second for the empty vessel, while for a sawdust scrubber for coke this velocity should be about 3″ per second: the depth of packing material should be altered with the fuel employed, and generally varies from one to four separate layers, each of a maximum thickness of about 8″, and resting on wooden grids or perforated plates.

A very compact design of gas scrubber and dryer different from the above-described types is used in the Galusha gas producer plants (see figs. 273 and 274).

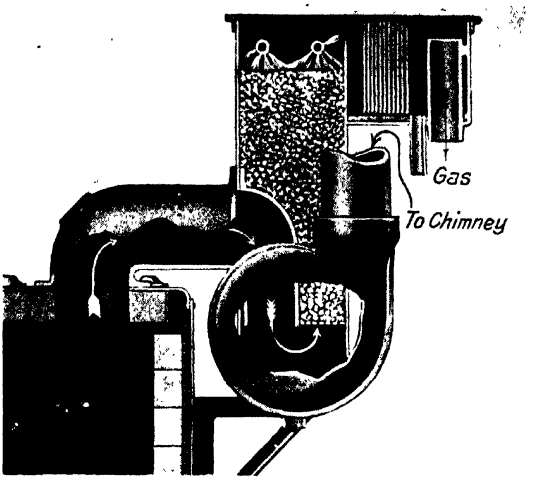

FIG. 273.—GALUSHA SCRUBBER AND DRYER MOUNTED ON PRODUCER.

The gas is sucked by the gas engine from the top of the producer, and passes directly into the combined scrubber and dryer which is carried from a bracket on the producer casing. The scrubbing chamber is rectangular in cross section and packed with either coke or crushed stone. The drying chamber is packed with a series of vertically tongued and grooved cast-iron baffle plates.

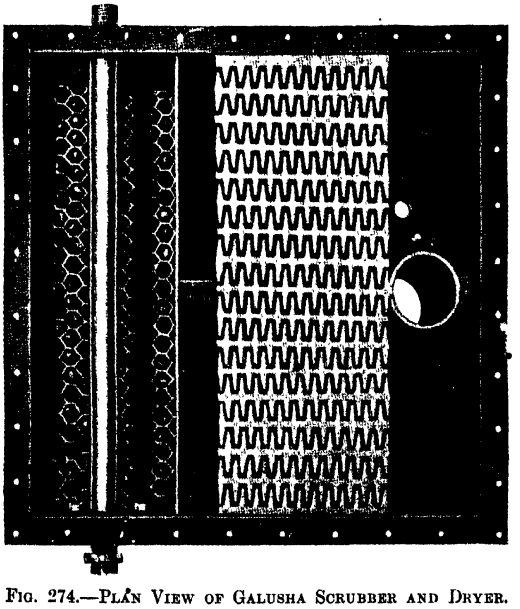

FIG. 274.—PLAN VIEW OF GALUSHA SCRUBBER AND DRYER.

One or more transverse water-spraying pipes at the top of the scrubber sprinkle water over the filling and also throw a spray on to the face of the vertical dryer baffles, thus tending to wash clean the zigzag paths of the gas (shown black in fig. 274). The baffle plates are easily removed or replaced for cleaning purposes.

To enable the use of such a small scrubber (compared to producer size, see fig. 235), it would appear that a very large quantity of water has to be employed to effect proper cooling. This particular producer being extensively used for marine purposes would seem to indicate that such a condition could easily be fulfilled.

The fan shown in fig. 273 is required for starting-up purposes, the foul gases being exhausted directly into the chimney without entering the gas scrubbing plant.

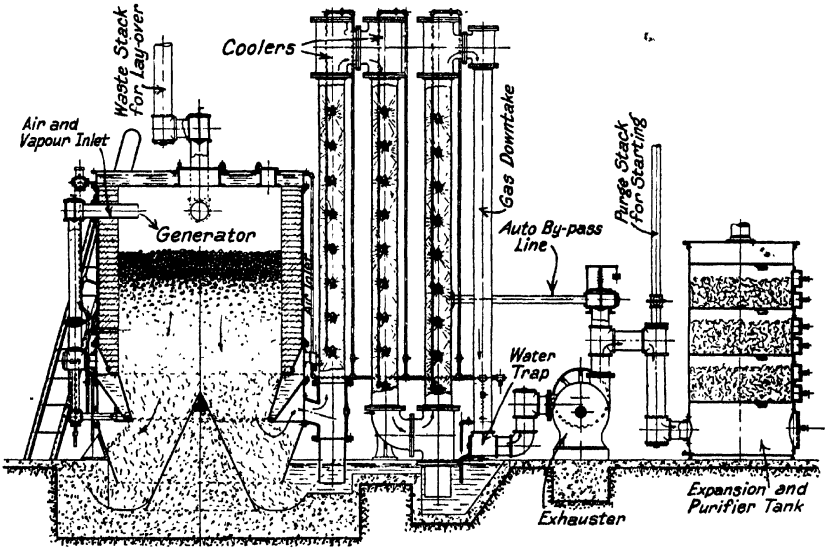

FIG. 275.—AKERLUND SPRAY GAS WASHER.

2. COOLING AND CLEANING PLANTS FOR DUSTY AND TAR-PRODUCING FUELS

Under this heading come not only plants for treating gas from dusty fuels low on volatile matter, such as coke or anthracite, but mainly for gas from all bituminous or "young" fuels depositing tar upon cooling.

The gas from such fuels will deposit its solid or condensable impurities more or less completely in the cooling plant. If the apparatus used for this purpose are so designed that the solid (pasty or sticky) deposits can accumulate in the cleaning plant at places from which it cannot be removed, then constant difficulties and operation interruptions may be experienced. Whenever scrubbers filled with coke, wooden grids, or tiles have been used for cooling hot crude tarry gas, blockages of the filling material have quickly taken place. All modern gas cooling apparatus are therefore made to be self-cleaning *washers* in which the flow of the washing liquid is such that not only does it wash impurities out of the gas, but it also scours the inside of the washer itself for deposited impurities.

Although the gas is efficiently cooled, and the dust removed in such washers, they are, however, unable to eliminate the whole of the tar from the gas (unless a tar-absorbing oil is used as the washing medium); this is effected in special tar cleaning devices, such as gas washing fans, disintegrators, tar recovery filters, etc., in addition to which sawdust scrubbers are sometimes used to ensure the removal of the final traces of tar.

Fig. 275 shows the Akerlund type of gas cooling and cleaning plant, in which the washers consist of empty vertical tubes through which the gas passes in series. At several points on each tube a water spray is provided for washing the gas, the water with the washed-out impurities leaving at the open end of each cooler, which is sealed in a concrete water lute. On leaving the last washing tube the gas enters an exhauster which presses the gas through a sawdust scrubber. The producer shown on this illustration is of the down-draught type, but similar gas cleaning plant is used for up-draught producers.

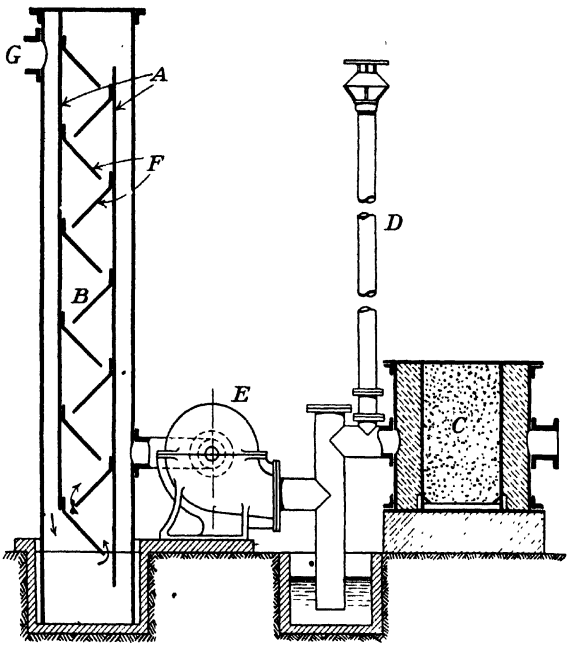

FIG. 276.—DOWSON & MASON CASCADE WASHER FOR WOOD WASTE PLANT.

On fig. 214 is shown the cooling and cleaning plant used in connection with the Deutz brown coal producer gas plant. The gas is sprayed with water in the downcomer pipe from the producer, thus settling out part of the dust and cooling the gas to some extent before it is washed in the centrifugal gas cleaner or disintegrator shown in fig. 283; after separation of the tar the gas enters a hurdle-type scrubber in which it is finally cooled previous to passing through a dryer to the gas engine. In this plant the tar and dirty impurities are removed in a mechanical washer, while the main cooling is effected in a similar plant to that used for non-volatile fuels.

Fig. 276 shows Dowson & Mason's cascade washer such as is used on wood waste gas producers. A circular or rectangular vessel B is provided with two vertical baffle plates A, to which are riveted in alternate vertical positions inclined smaller baffle plates F. The gas enters from the producer at G, passes in a down-

ward direction behind baffle plate A, and then in a zigzag upward path between the baffles F, where it is washed with water flowing down the latter counter-currentwise to the flow of the gas. Any dust or tar deposited on the baffles F is washed away into the concrete water lute.

On leaving the cascade washer the gas is passed through a centrifugal tar extractor E and a sawdust scrubber C before it is ready for use.

Fig. 277 shows another type of cascade washer as used in conjunction with Wells's producer (figs. 115 and 212).

Fig. 278 is a view of a complete gas producer plant for wood waste such as is

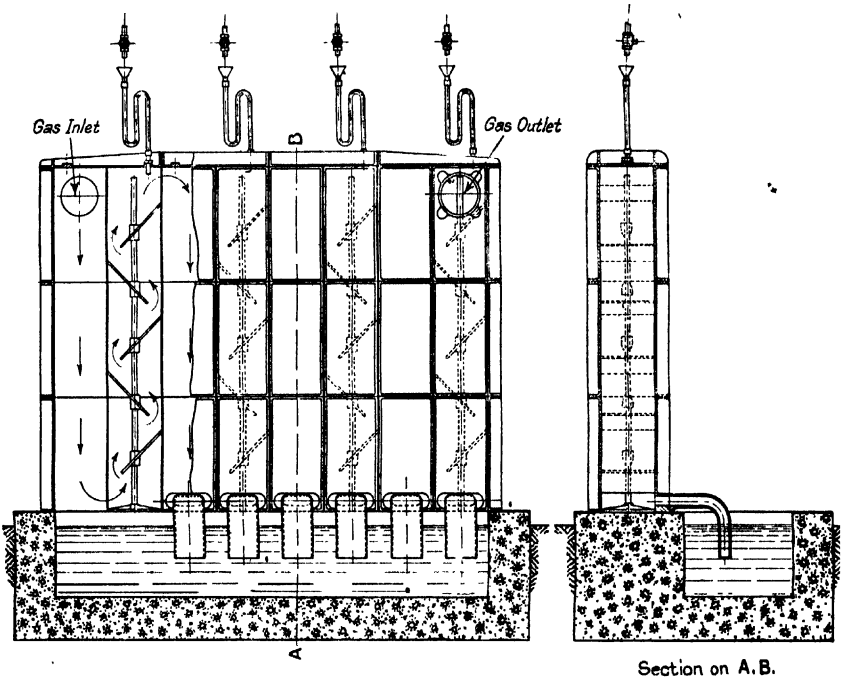

FIG. 277.—WELLS'S CASCADE WASHER FOR WOOD WASTE PLANT.

built by Messrs. Ruston, Proctor & Co. The gas from the multiple outlet pipes (see fig. 208) enters two circular dust collectors, one on each side of a cascade type scrubber, in which the gas is washed with water in the usual way. An inclined downcomer pipe conducts the gas directly into a tar extractor of the centrifugal fan type. The impellers in the latter atomize the water introduced, and mix it so intimately with the gas that the main amount of tar separates out as an emulsion which drains into water-sealed pots at the gas inlet and outlet branches from the tar extractor. Before passing to the engine the final traces of tar and entrained moisture are removed in a sawdust scrubber.

The distribution of the water falling from one inclined flat plate to the other on cascade or baffle washers, as described above, is sometimes defective, in so far as an even distribution of the sheet of cooling water over the edge of the flat plate cannot be ensured throughout the whole depth of the washer. Difficulties of this kind are eliminated with washers having concentric water collecting and distributing devices, such as Lymn's washer shown in Fig. 279.

This consists of a steel shell (A), to which is attached a series of truncated cones (B), placed alternately with a corresponding series of discs (C) fixed to a central

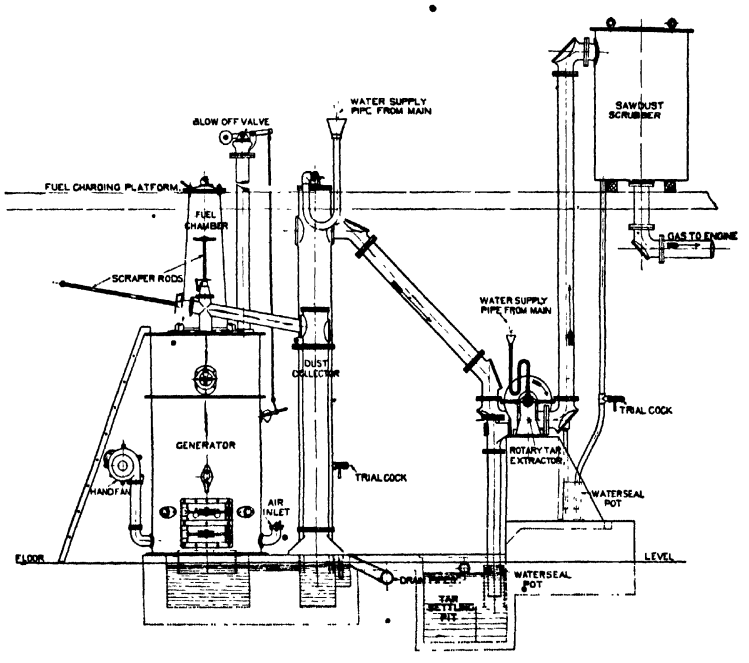

FIG. 278.—RUSTON GAS CLEANING PLANT FOR GAS FROM WOOD WASTE.

shaft (D). The washer is fitted with a gas inlet (E) at the bottom, and with gas outlet (F) and liquid inlet (G) at the top.

Falling by gravity alternately from the discs to the cones and *vice versa* the thin sheets of liquid are atomized by the momentum of the upward-flowing gas current, and in the form of fine spray driven on to the next following disc and cone, where the spray again unites into thin sheets of descending liquid, which in their turn scour the discs and cones for any deposited dust or tar.

The first washers used by Mr. Arthur H. Lymn [1] in connection with by-product recovery producer gas from bituminous coal were of the mechanical type, the shaft

[1] A. H. Lymn, *Gas Producers with By-product Recovery*, December 7, 1915, American S.M.E.

D being arranged to revolve as in many of the known mechanical scrubbers used in lighting gas practice, while the truncated cones B were made of the same internal diameter as the distributing discs C, so as to ensure that the water did not drop right to the bottom without touching the discs. It was found, however, that the momentum of the gas was performing far more of the cleaning work than was the mechanical movement of the discs.

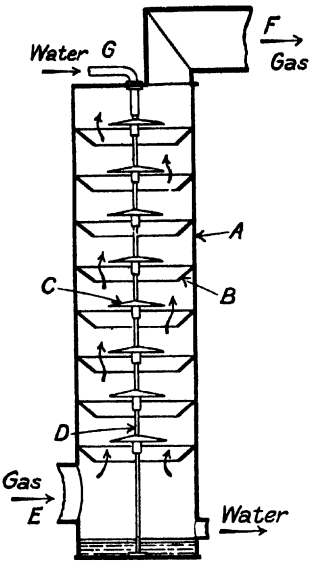

FIG. 279.—LYMN GAS WASHER.

Mr. Lymn then eliminated the mechanical feature of the washer and cut away the internal cones to give the gas more play, as shown in fig. 279.

Without any fear regarding bad water distribution it is stated that these washers can be built in sizes up to an hourly cold gas throughput of two million cub. ft., with very much smaller time factors than are required in connection with coke- or tile-filled scrubbers.

The following results have been obtained by the Power Gas Corporation on a Lymn washer of 250,000 cub. ft. hourly capacity, used for cooling and cleaning producer gas from dust :—

Gas Flow, cub. ft. per hour.	Water used, galls. per hour.	Gas Temperature, ° C.		Water Temperature, ° C.		Dust in Gas, grammes per cub. m.	
		In.	Out.	In.	Out.	In.	Out.
350,000	9850	295	13	10	35·5	·484	·012
180,000	2700	307	17	12	48	·56	·014

Gas Analysis.

CO_2	6·6 per cent.
CO	23·5 ,,
CH_4	1·2 ,,
H_2	20·4 ,,
N_2	48·3 ,,

Fig. 280 shows the Power Gas Corporation's gas cooling and cleaning plant used for gas from bituminous coal; it consists of one Lymn washer A, two centrifugal gas washing fans C, and one or more sawdust scrubbers D.

The gas from the producer enters the base of the washer through the pipe E, which is inclined so as to keep the crude gas mains clean and cause the gas to impinge on the water surface in the concrete tank H, into which the lower end of the washer

is sealed. It will be noted that the surface of the cones and discs is more steeply inclined (to the horizontal axis) on the lower ones, thereby ensuring definitely that dust and dirt deposits are scoured off properly. At the top of the washer is placed a series of concentric perforated screens B (somewhat similar to a Pelouze-Audoin tar extractor), through which the gas has to pass before it enters the centrifugal cleaning fans C, in which the gas is washed with about 1 kg. of water per cub. m. of gas treated.

When dealing with an average bituminous coal, the tar content in the gas entering the fans may be from 4 to 10 grammes per cub. m., while the content in the gas leaving is generally about ·25 to ·5 grammes per cub. m., the exact amount varying with the washing water temperature.

The method of packing a sawdust scrubber for downward flow of gas is shown in detail in fig. 281. Sawdust scrubbers for bituminous coal should be designed for a gas velocity of 1″ to 2″ per second (through the unpacked scrubber), *i.e.* a much larger area should be available than for coke or semi-bituminous fuels. The sawdust scrubbers have to be repacked from time to time as they become fouled,

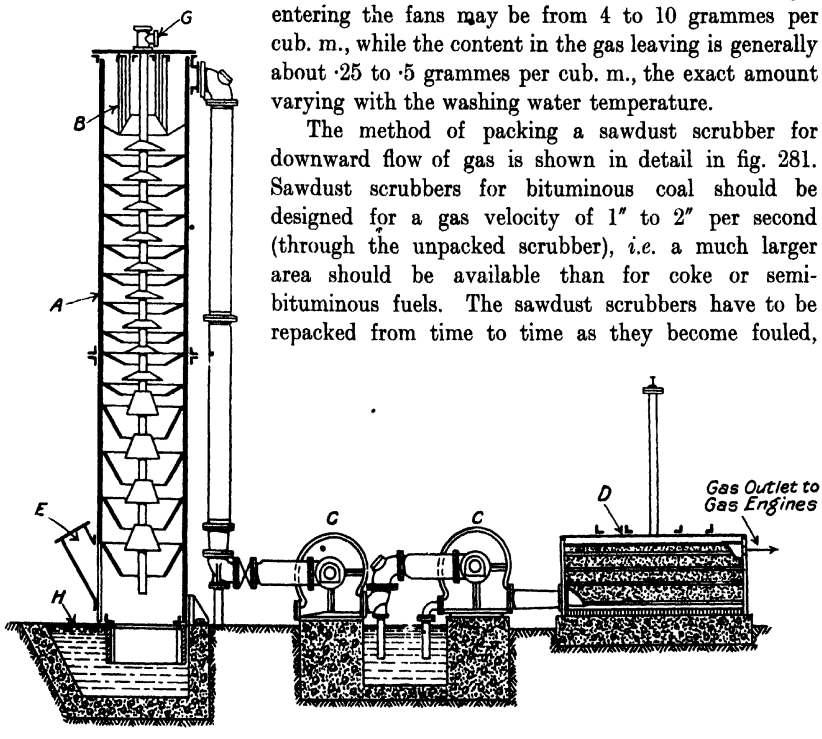

FIG. 280.—GAS CLEANING PLANT FOR BITUMINOUS FUELS (POWER GAS CORPORATION).

the fouling period altering considerably with the design of the other cleaning plant installed, the temperature of the cooling water, the load and purpose of the plant, etc. Once every six months for plants working continuously may be said to be an average time when working on bituminous coal in this country.

The tar in the gas leaving the scrubber should not be more than about 0·1 grammes per cubic metre if used for gas engines, while for general furnace work this limit of tar content may be exceeded somewhat.

A method of packing a dry scrubber filter for gas made from wood waste is shown in fig. 282 (National Gas Engine Co.). It will be noted that instead of

using ordinary wood machining refuse, materials such as coke, wood wool, and cocoanut mats are employed in addition to a sawdust layer.

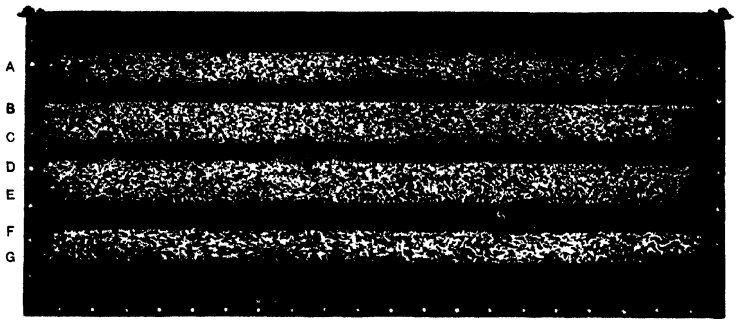

FIG. 281.—SAWDUST SCRUBBER FOR BITUMINOUS FUELS (POWER GAS CORPORATION).

A. Chippings only.
B Sawdust about 2″ deep packed tightly round the edges.
C. Fine planings packed evenly.
D. Sawdust about 2″ deep packed tightly round the edges.
E. Fine planings packed evenly.
F. Sawdust about 4″ deep packed tightly round the edges.
G. Coarse planings packed evenly and well into the corners.

In some districts where wood waste or other of the described filtering materials are not available, cheap local materials are often employed, *e.g.* sugar cane refuse, straw, seeds, etc. have all been used as more or less successful substitutes.

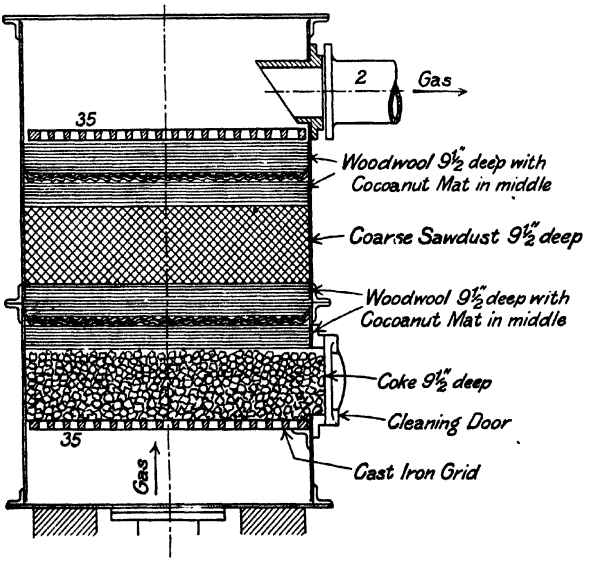

FIG. 282.—NATIONAL DRY SCRUBBER FILTER FOR GAS FROM WOOD WASTE.

The separation of tar from the producer gas on plants using centrifugal tar extractors depends upon two equally important factors, viz., the temperature of the gas, which must be so low as to cause a condensation of the tar vapours from the gas, and the intimate contact between the water in the gas washing fan and the tar vapours. When converted from the gaseous into the liquid state the

tar vapours do not at once deposit themselves from the gas as liquid drops, but are retained in the gas in the state of a "tar fog," which, as borne out by experience, cannot be separated by cooling only. The centrifugal action of the vanes in the fan appears to be such that the finely divided water particles either coat the tar fog or become coated therewith, thus rendering the combined liquid particles heavy enough to separate from the gas by gravity.

If of sufficiently sturdy construction to withstand the extra force required in splitting up the water, most of the centrifugal gas boosting fan types described on p. 435 may act as more or less successful tar extractors.

In many cases special designs of gas washing fans or disintegrators are used, such as, for instance, the Deutz type shown in fig. 283. It consists of three series of discs fixed to a common shaft and having gas and tar beating vanes provided

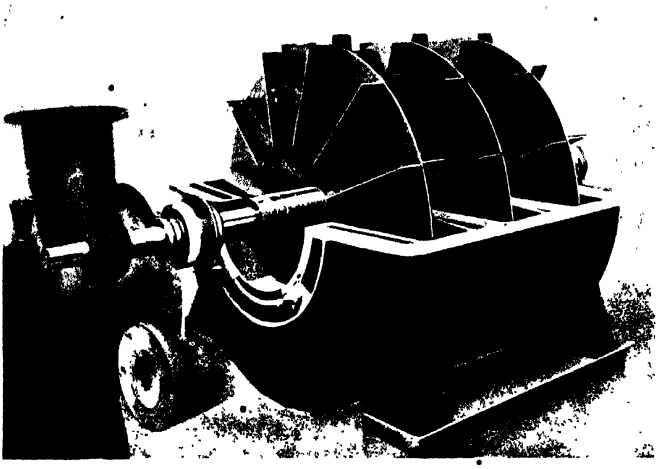

FIG. 283.—DEUTZ GAS WASHING FAN OR DISINTEGRATOR.

on both sides. The water is introduced through separate feeds to the top of each disc chamber, while the tar emulsion leaves at the base. An analysis of this tar emulsion made on the plant referred to on p. 329 showed the following result :—

58·4	per cent	water.
2·3	,,	dust.
39·3	,,	tar substance.

Such a tar would have no great commercial value, due to its high water and dust content.

The efficiency of any given fan as a tar extractor increases with the circumferential speed of the rotor, which for ordinary fan types is never less than 50 m. per second (165 ft. per second). In some cases the tar extraction efficiency is given in percentage of tar removed, but this is not a proper basis of comparison for the merits of any particular tar extractor, as, for instance, on a plant employing two

gas washing fans in series the following average results for four months' operat were obtained :—

	Tar content in grammes per cub. m.	Temperature of Gas.	Tar Extracti " Efficiency.
Gas entering No. 1 fan . .	5·3	38° C.	77% } =90'
Gas leaving No. 1 fan . .	1·2	31° C.	54% }
Gas leaving No. 2 fan . .	·55	25° C.	

Although the fans were identical in design and revolved at the same speed, so-called tar removal efficiency is very much lower for the second fan than for first.

On another gas producer plant having two fans in series the following res were obtained :—

	Tar content in gas grammes per cub. m.	Gas Temp. °C.	Notes.
Gas entering No. 1 fan . .	1·86	47	In summ
Gas leaving No. 2 fan . .	1·42	40	time
Gas entering No. 1 fan . .	1·52	15	In winte
Gas leaving No. 2 fan . .	·07	8	time

which shows very clearly the different results that are obtained if the gas is prop cooled before entering the gas washing fans.

This irregularity and insufficiency of tar removal by centrifugal means nec tates the employment of sawdust scrubbers and filters to remove the final tr of this impurity (or by-product). It will have been noted in all the previo described sawdust scrubbers that a material is used which when it becomes fo (except for burning under boilers) cannot be used again, that a large space is occu and that voluminous and consequently costly vessels have to be employed.

Several proposals have been put forward to enable the elimination of centrifugal tar extractors and the great disadvantages attached to the use of saw scrubbers. The only means which so far has met with some commercial succe the employment of small filters in which the gas is "wire drawn" [the pres drop through the filter being in some cases as much as 4 lbs. per sq. inch (·28 kg. cm.^{2})], thereby causing the fine tar globules to be brought into contact with another, and thus agglomerate in tar drops which can flow away from the fi To enable an easy flowing away of the tar it is necessary to maintain the filter the gas at a sufficiently high temperature. Apart from the employment of relatively great gas pressure, this system of tar removal has the advantage

the tar removed contains considerably less water than that obtained by direct water scrubbing or in the tar emulsions leaving gas washing fans.

The Pelouze-Audoin tar extractor may be said to be a forerunner of this system of tar removal; the gas is wiredrawn here also, and the temperature of the gas must be maintained high enough to enable the tar to flow. Fig. 185 shows such an apparatus installed on a Moore by-product recovery plant.

There are many types of tar extractors of this kind on the market, and the reader is referred to standard works on lighting gas practice for detailed information upon the subject. Speaking generally, the tar removal is effected by passing the gas through a series of concentric perforated plates, sometimes twelve in number, placed about $\frac{1}{4}''$ apart. The perforations may be circular holes (say forty to fifty $\frac{1}{16}''$ diameter holes per sq. inch), or alternate vertical and horizontal slots of varying sizes as shown in fig. 284, which shows the screens used by Messrs. Pintsch for tar extraction from producer gas.

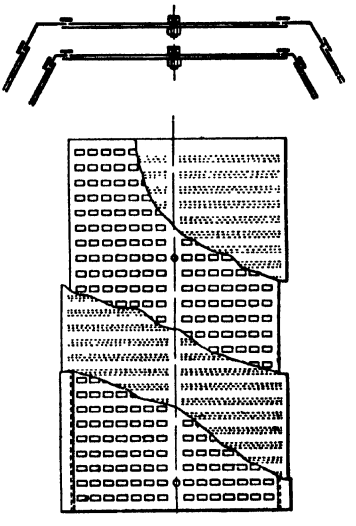

FIG. 284.—PELOUZE & AUDOIN TAR EXTRACTOR SCREEN (PINTSCH).

Fig. 285 shows the gas cleaning plant employed by the Smith Gas Engineering Co. (U.S.A.) for bituminous producer gas. Briefly the plant consists of the gas producer E, primary and secondary gas coolers J and R respectively (which are of the concentric cascade type, somewhat similar to the Lymn washer), and the tar extractor M, with gas pump L, the latter two being shown in detail in fig. 286.

The partly cooled gas leaving the primary cooler enters the gas pump or exhauster at a pressure below atmospheric and is delivered at a high pressure into the tar separator M the latter consisting of a glass wool filter E^1, with inlet and outlet connections C^1 and F^1 respectively. The casting containing the filter is fixed in such a way that by turning round its axis the filter can be quickly replaced without undue gas loss. Multiple filters are generally installed to avoid irregularities in working, fig. 287 showing a multiple filter of which the one is dismantled while the other is "on."

In passing through the glass wool filter E^1 the pressure loss of the gas is from two to four pounds per sq. inch, while the tar fog agglomerates into large drops, which fall out of the gas current by gravity into the tar trap N.

It is claimed that any degree of cleanliness can be attained, the determining factor being the cost of power. Although the work to be carried out in the gas pump or exhauster is very much larger than usual for boosters in other types of cleaning plant, not only on account of the higher pressures, but also because the gas is of a larger volume in its hot state, this system has the advantage that *one*

machine only is provided to handle the gas from the plant (no air blower being employed), while no power is required to split up the washing water as in centrifugal gas fans.

Fig. 288 shows the bituminous gas cleaning plant used by the Flinn & Dreffein Co., U.S.A. Crude hot gas from the gas collecting main A enters the mild steel cooler B, in which it is cooled to that temperature which is most suitable for tar extraction in the primary and secondary tar extractors C_1 and C_2. In cooler B most of the soot, dust, and heavy tars are thrown down. After leaving the tar

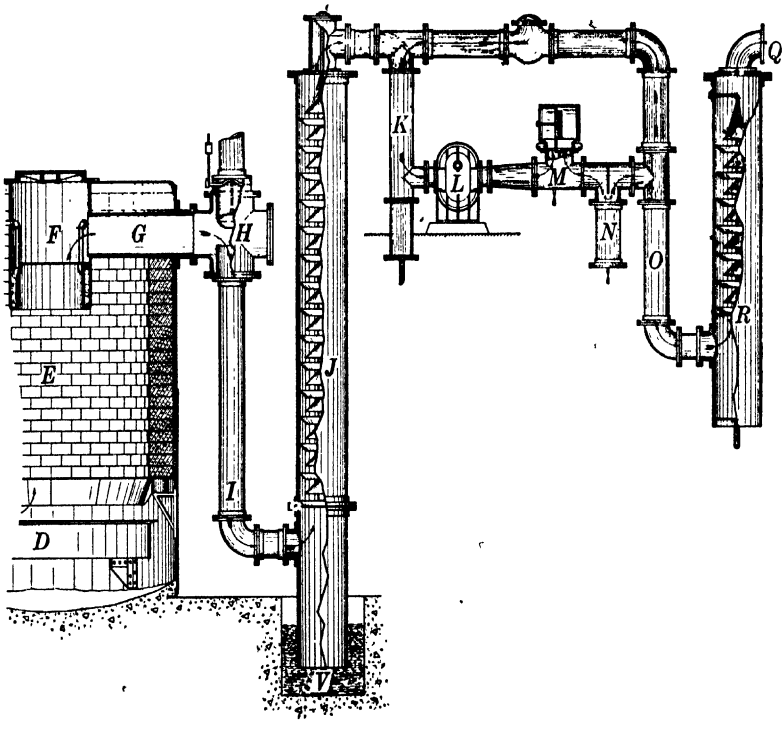

FIG. 285.—SMITH TYPE OF GAS CLEANING PLANT FOR BITUMINOUS PRODUCER GAS.

extractors the gas is passed through a coke or timber packed scrubber D for final cooling before it enters the gas exhauster E.

The tar extractor is shown in detail in fig. 289. In its principle it consists of a tapered plug, heavily threaded, fitted into a female similarly threaded. The plug is mounted upon a vertical shaft, which has a thread the same pitch as the plug. The threaded part of the shaft passes through an outside yoke. Accordingly, the plug may be screwed up or down and remain in mesh with the female thread, but not in contact with it. The width of passage or channel between the threads is varied through changing the position of the plug. The dirty gas enters the tar

extractor above the plug and is drawn through by means of the suction produced

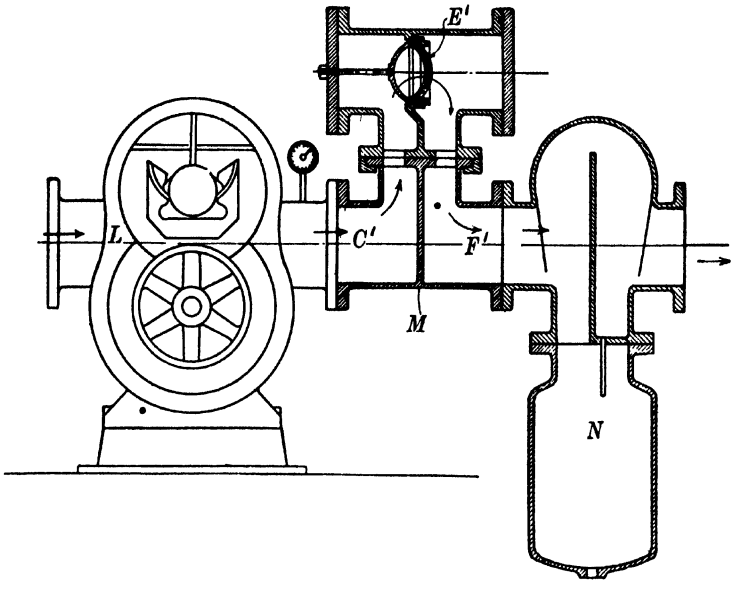

FIG. 286.—SMITH TAR EXTRACTOR.

by the gas exhauster. The small tar particles strike the sides of the narrow thread opening, through which the tar drains off in the direction of the gas flow. In the upper chamber of extractor, above the plug, are water sprays. Water is used to cool the gas further and also to act as a vehicle for maintaining the flow of tar, if of a sticky type.

The illustration shows an extractor with five concentric gas threading passages, but the principle of gas treatment remains the same whether one or five passages are employed.

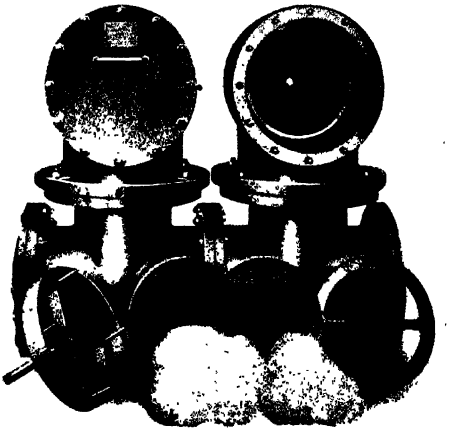

FIG. 287.—PHOTOGRAPH OF DISMANTLED TAR EXTRACTOR.

The average pressure loss in passing through the threads is about 1 lb. per sq. inch, while the gas velocity thereby set up is over two miles per minute (54 m./second). The screw adjustment enables the

space available for the gas passage to be altered in accordance with the desired rate of gas delivery.

Although the process of tar removal in the Smith glass wool tar extractor

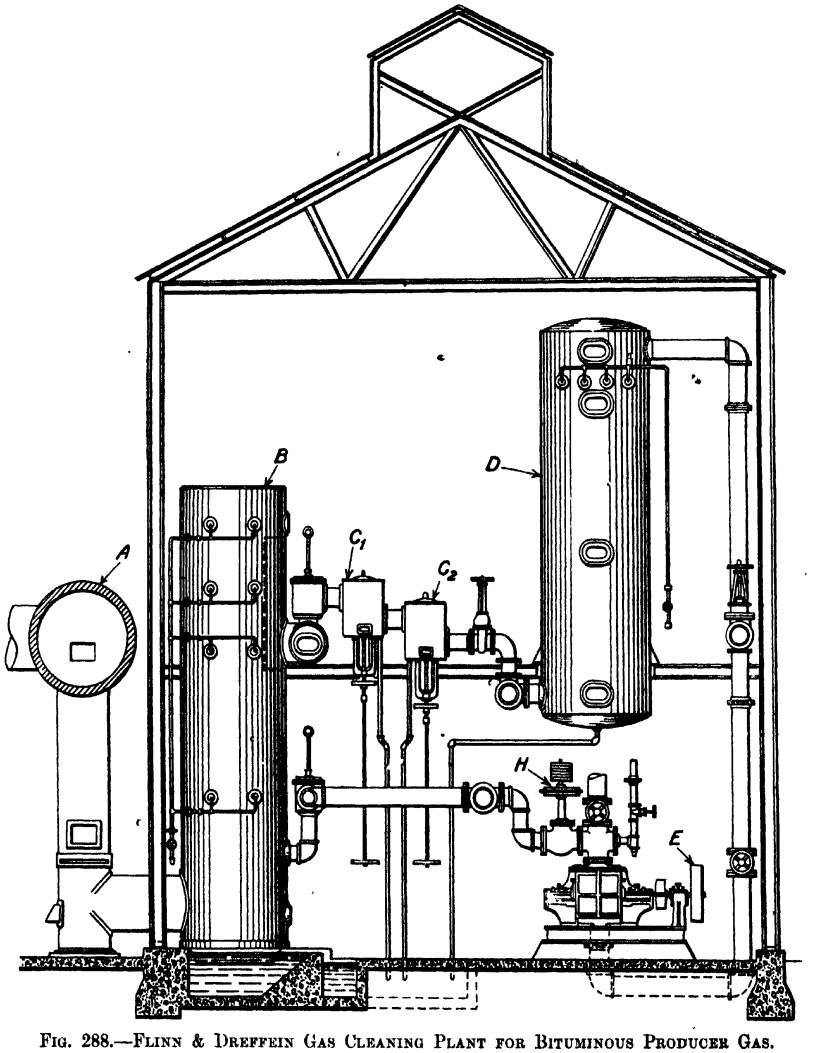

FIG. 288.—FLINN & DREFFEIN GAS CLEANING PLANT FOR BITUMINOUS PRODUCER GAS.

when first placed upon the market, was claimed to be due to the electric action of the glass wool upon the tar, it would appear that the action may be a physical one.

A purely electrical process for precipitation of the dust and tar from gases is that of Prof. Cottrell, U.S.A. This process has proved itself eminently suitable for

the purification of most gases, and is said to have been successfully employed for the precipitations of tar from producer gas in U.S.A., while, so far as the author's knowledge goes, no such plant is in operation in this country.

The principle of the Cottrell process is that if a high tension electric current (about 75,000 volts) is allowed to silently discharge through a gas containing tar in the form of tar fog, the particles of tar will coalesce until drops are formed which become too heavy to remain suspended in the upward flowing gas current.

The power consumed by the precipitator is comparatively small, and the apparatus would probably not be more expensive than an installation of centrifugal gas cleaners and sawdust scrubbers for the same duty, but whether the tar removal will be as effective as in a plant of the latter type is yet to be proved on a large scale; this may perhaps be expected in the near future.

Other methods employed for removing tar from the gas consist of washing the gas with an absorbing oil in scrubbers or centrifugal gas washing fans; these are described on p. 420.

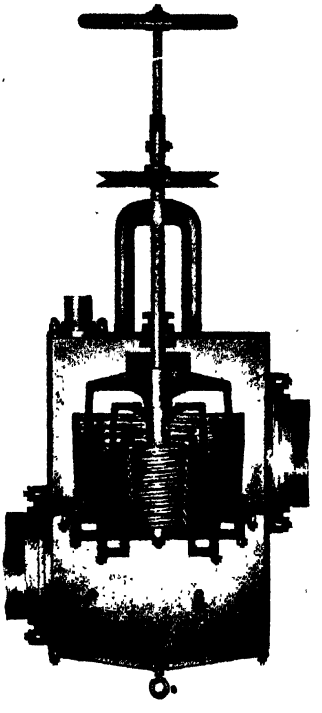

Fig. 289.—Flinn & Dreffein Tar Extractor.

3. Gas Cooling and other Plant required for the Recovery of By-products from Producer Gas

The type of plant used for the recovery of by-products depends upon the physical state of the hot crude gas as it leaves the gas producer (or super-heaters), and upon the particular constituents which have to be removed therefrom, as well as the state in which these are made ready for the market.

Regarding the physical state of the crude gas—the factors which influence the design of the gas treating plant are the temperature of, the moisture and the dust contents in, the crude gas.

Since cold producer gas will always give a higher utilization efficiency the drier it is, and as its dryness depends upon its final temperature (at which it is always saturated with moisture), cooling of the gas should be complete and efficient. As we have already seen, the size of the cooling plant *per se* depends upon the total heat capacity of the crude gas, that is, its sensible heat content as well as the latent heat of any moisture it contains. When the total heat to be abstracted becomes large, then an arrangement is often made to utilize the heat of the hot cooling water

for saturating the air blast for the gas producer; such an arrangement is of great economical importance on gas producer plants where ammonia is the chief by-product, since these plants generally require more steam than when ammonia recovery is not effected.

When the crude gas contains dust, this should be separated from the gas, so that it cannot affect the purity of the by-products. For this reason dust removal is often resorted to in primary gas washers (or dust washers) in which the gas is cooled close to its saturation temperature by washing with hot water, which simultaneously causes the dust content to be practically eliminated.

The main distinction of the gas treatment used on by-product recovery plants from that of other producer gas treating plants is, however, the recovery of the by-products themselves. Accordingly we shall deal successively with plants :—

(1) For the recovery of ammonia.
(2) For the recovery of tar.

While tar recovery is always possible in an ammonia recovery plant, it is not always possible to recover ammonia in a plant designed for tar recovery.

Although commercial success in recovering a third by-product from the gas, viz. sulphur, has not yet been established, we shall also at the end of this chapter outline some of the proposals so far made with this object in view.

RECOVERY OF AMMONIA FROM PRODUCER GAS

The volume concentration of ammonia in the crude producer gas (containing water vapour at a saturation temperature of 60° to 80° C.) varies for most by-product recovery plants between 0·7 and 0·15 per cent. If the moisture and ammonia were simultaneously removed from the producer gas by cooling and condensation by indirect methods as in gas works practice, the concentration of ammonia in the liquor obtained when using an average English coal will be less than 0·5 per cent if *all* the ammonia is removed and recovered with the condensate, but the ammonia is *not* all absorbed by the condensate; generally more than 50 per cent being retained in the gas and only removable by washing.

We have already seen (p. 377) that, due to the large volumes of gas in question, indirect methods are not so economical to employ for cooling producer gas as direct methods. Not only on account of these reasons, but mainly due to the behaviour of ammonia in a gas mixture upon cooling, as mentioned in the preceding paragraph, direct absorption (by acids) of ammonia from the hot gas at a temperature above its dew point has so far been the only commercially successful procedure. Since this dew point is generally above 70° C., volatile acids such as hydrochloric or nitric acids cannot be employed, the only acid so far used in practice being sulphuric acid.

The principles of the process employed in present-day practice in the direct recovery of ammonia from producer gas were laid down by Dr. Ludwig Mond in 1885 (see p. 280). Fig. 177 shows a section through his ammonia recovery plant. The gas from each producer was passed into a common mechanical dust washer

from which, at a temperature of about 80° C., it was passed into a packed stoneware tower down which was flowing a solution of sulphate of ammonia and sulphuric acid in water, the concentration of acid being about 2 per cent. After leaving the acid tower the gas was cooled to about 65°-70° C. in a scrubber, the hot water from which was used to supply part of the steam for the gas producer air blast.

Fig. 290 shows a diagram of the gas treating and other plant as built by the Power Gas Corporation, in connection with the production of clean producer gas with the simultaneous recovery of ammonium sulphate and low temperature tar. Although the Lymn type of washer is employed, it will be obvious from the following that the process of the ammonia recovery and gas cooling is the same as that originated by Dr. Mond.

The hot crude gas from one or more generators passes through the vertical dust washer 1, in which it is cooled by hot water to the close neighbourhood of its dew point and the bulk of the dust is removed. The gas then passes through the Lymn type ammonia absorber 2, in which it is washed with a liquor containing a small excess of free sulphuric acid, thus stripping the gas of ammonia, an absorption efficiency of 95 to 99 per cent being obtained. To avoid acid spray being carried forward mechanically, the top of the washer is provided with a coke filter.

The hot gas is now washed with water in Lymn washer No. 3, the hot water from which passes directly into washer No. 5, in which it is cooled again by the air on its way to the producers, the air thus being heated up and becoming saturated with moisture. This process is the same as that described in reference to fig. 166.

Final cooling of the gas to atmospheric temperature takes place in Lymn washer No. 4, and the gas washing fans 6, one of which may be supplied with absorbing oil to remove the lightest oil compounds from the gas. If for use in gas engines or small furnaces the gas is passed through sawdust scrubbers 7.

Tanks 8 and pumps 9 for the circulating liquor and water are provided. In the tanks the tar is separated from the water and passed into a tar storage tank 10, from which the tar in a hot state is passed to a mechanical dehydrator 11, which dehydrates the tar to about 2 per cent moisture content, and charges it into barrels, tanks, or the like, 12. (For further details of tar dehydration see p. 415.)

When of sufficient strength (about 1·18 to 1·2 specific gravity) the sulphate of ammonia liquor is passed to a storage tank 13, from which it is supplied at will to a vacuum evaporator 14, the vapour driven off from the liquor being condensed in jet condenser 15. The sulphate salt is finally dried in the centrifuge 16, and passed to the store for packing.

A point worthy of note in the plant shown is that the ammonia absorber is made of steel and not of earthenware or lead. It is well known that strong sulphuric acid has practically no corrosive action on mild steel or iron, while dilute solutions are strongly corrosive. On this account it was never attempted to build the absorbers of the first ammonia recovery plants of any other material than one neutral to weak sulphuric acid (say lead) until the manager of a Mond plant in this country once employed the dust washer as an ammonia absorber, with no detrimental result. Several attempts were then made to install ammonia absorbers in steel,

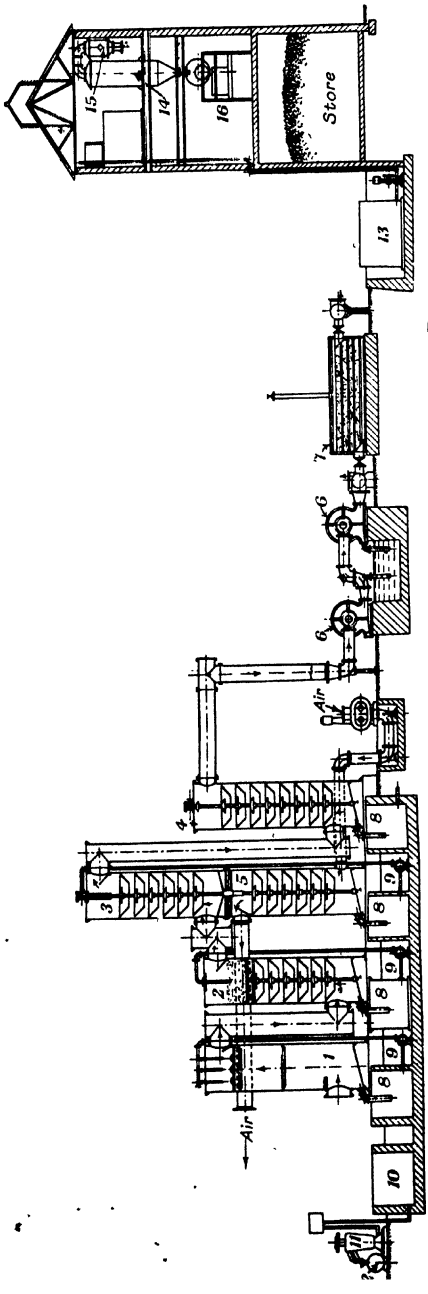

FIG. 290.—DIAGRAM OF POWER GAS CORPORATION BY-PRODUCT RECOVERY PLANT.

but none appears to have withstood corrosion so successfully as washers of the Lymn type.

In describing the Lymn plant installed at the Hoffmann Manufacturing Co.'s Works (*I.E.E.*, March 11 and 18, 1920) Mr. Patchell, M.I.C.E., writes as follows :—

"The reason why corrosion takes place in some cases and not in others does not yet appear to have been discovered, although many attempts have been made to solve the problem by chemists engaged on recovery plants. Apparently the composition of the coal has something to do with the matter. From the author's experience it would appear that when using mild steel plates very little corrosion takes place, unless the metal is also subject to erosive action or is under stress. At such points corrosion may be rapid.

"In the case of Messrs. Hoffmann's plant, ammonia recovery was not attempted until some weeks after the plant was started, in order that the interior of the vessel might get thoroughly coated with tar before any acid liquors were circulated. Beyond the failure of a few bolts and rivets there has been no trouble from corrosion."

The sulphate liquor on this plant also seemed to corrode the cast iron delivery pipes at the chaplets, while the circulating pumps had to be made of bronze to successfully withstand the action of the acid.

Fig. 291 represents a typical instance of the gas temperature and pressures existing in a Lymn type gas producer plant. It is a reproduction of a chart published by Mr. Patchell (see above).

To prevent tar losses and also

economize in the water consumed by the plant, the cooling water used for washer No. 4 and the gas washing fans, fig. 290, should be recooled in a water cooling plant, which procedure also causes the phenols to be retained in the plant and not run to waste. Some fuels do not produce a large quantity of phenols in the tar, and consequently this rule need not be strictly adhered to when fuels of this type are being gasified.

Fig. 292 shows a vacuum evaporator such as has been employed for dealing with the sulphate of ammonia liquor produced on the gas plant. It consists of a tubular evaporating system A, with a salt settling cone B at its lower end, and a vapour chamber C, with superimposed spray catcher D at the top. At the base of B a salt drainer E is connected up by valve E_2, while the vapour from D enters the jet condenser F, in which it is condensed by water spray from valve F_1, while

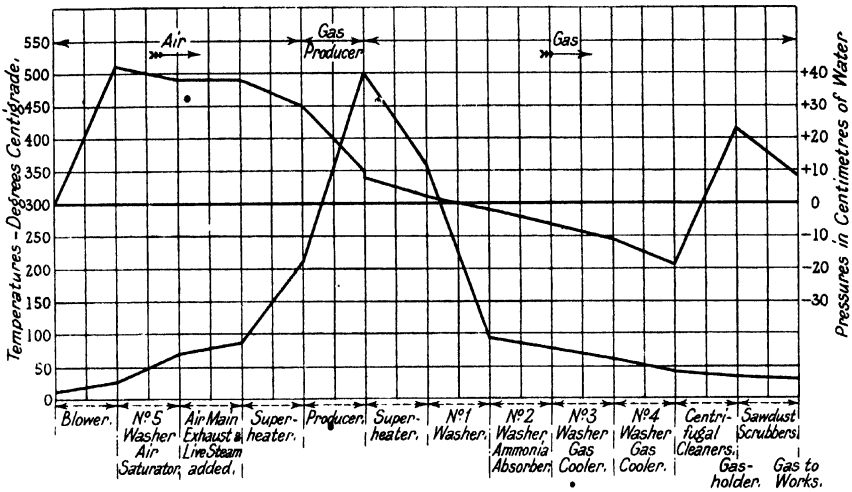

FIG. 291.—DIAGRAM OF AIR AND GAS PRESSURES AND TEMPERATURES ON A LYMN PLANT.

the condensate and condenser water is run to waste at branch F_2. To maintain a constant vacuum some types of jet condensers are connected to an air pump, while others may be designed or placed so that the jet condenser also acts as the air pump.

All parts of the evaporator in contact with the sulphate of ammonia liquor or spray, such as the tubes in the evaporator chamber and the top and bottom of the evaporator, are made of acid-proof material, generally special copper alloys, although casings have in some cases been successfully employed in acid-proof cast iron and tubes of wrought iron.

The procedure of evaporation is generally as follows :—

Sulphate of ammonia liquor is supplied through cock C_1 at a rate equivalent to the desired evaporation, while steam is admitted round the evaporating tubes in chamber A from valve A_1, the condensate being removed at trap A_2. As evaporation proceeds sulphate of ammonia crystals separate out in cone B, while the acidity

of the liquor increases. When a sufficient quantity of crystals has separated out, sluice valve E_2 is opened and the salt allowed to fall into the drainer E, the door E_1 having previously been closed. When the valve E_2 is closed again, the wet sulphate in E is left for several minutes to drain properly (the salt resting on a perforated plate E_3) before the door E_1 is opened again to enable the salt to be shovelled into a centrifuge for final drying. The mother liquor draining away from the salt (which may contain as much as 8-10 per cent sulphuric acid) is run back to the ammonia absorbing system, or returned direct to the evaporator. The salt after being finally dried and washed in the centrifuge is generally conveyed to a store.

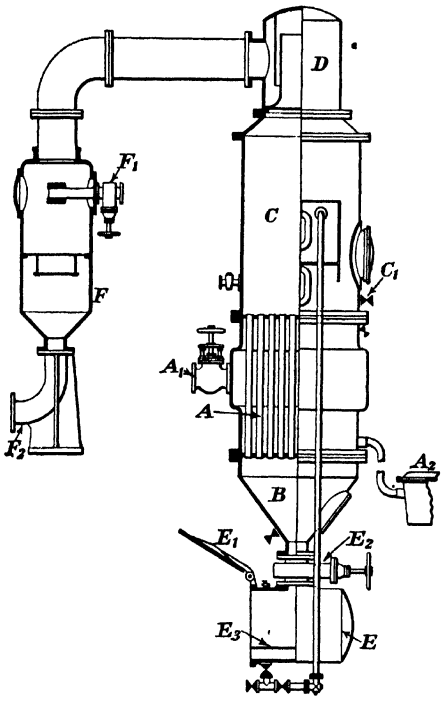

FIG. 292.—SULPHATE OF AMMONIA EVAPORATOR.

In the earliest types of evaporators it was usual to evaporate the liquor in open pans, the steam escaping from the surface of the liquor. Vacuum evaporators are now exclusively employed because :—

(1) The vapour tension of the free sulphuric acid becomes less, since the liquor temperature is close on 50° C. instead of 100° C.

(2) The temperature difference between the steam and the liquor becomes very much larger, thus enabling the employment of a very much smaller heating surface (and consequently lower costs) for the same output.

The purity of the sulphate obtained will depend on various factors, the main impurities being water and sulphuric acid, which in their turn depend upon the content of sulphuric acid in the mother liquor, and the degree of washing. The lower the acid content in the liquor, the less will be the acid and water content in the final product. This will be clear from the following analysis of finished producer gas sulphate :—

Acidity in original sulphate liquor, per cent		2	1	Nil
Sulphate	Ammonia content, per cent	24·60	25·25	25·38
	Moisture content, per cent	3·00	1·40	about 1·0
	H_2SO_4 content, per cent	·35	·1	·013

The last sulphate was obtained on the two-stage absorption process from a neutral liquor (as described in reference to fig. 294). When subjected to further drying in a steam-jacketed pan, the sulphate analysis became as follows :—

NH_3 per cent = 25·57
H_2O ,, = trace.

The colour of the sulphate made from producer gas is generally quite white when it leaves the centrifuge, but, due to the presence of minute traces of organic dye-compounds contained in the sulphate liquor (originating from the tar), the sulphate gradually acquires a greyish or brownish tinge.

If, as in some neutral sulphate processes, the liquor becomes slightly alkaline, the colour of the salt will also be affected. Similarly, exposing the sulphate to daylight or the sun's rays quickly darkens the colour, for which reason sulphate stores should have no windows and should be artificially lighted.

The steam requirement of the evaporator depends on :—

(*a*) The concentration of the sulphate in the liquor.
(*b*) The temperature of the sulphate liquor on entry to the evaporator.
(*c*) The quantity of mother liquor drained from the salt.
(*d*) Radiation and leakage losses.

Of the four causes for heat consumption the last three are, on a well-operated plant, of minor importance in comparison with the first. The quantity of water to be evaporated per unit weight of sulphate for sulphate liquors of varying specific gravities is clearly indicated on the curve plotted in fig. 293. Obviously from a heat conservation point of view the concentration of sulphate in the liquor should be maintained as high as possible; thus at 40° Tw. (1·2 sp. gr.) 2 tons of water are to be evaporated, while at 30° Tw. (1·15 sp. gr.) 4 tons of water are to be evaporated per ton of sulphate made. The possibility of maintaining a high concentration of sulphate in the liquor depends upon the ammonia absorbing system of the gas cleaning plant, in so far as the circulating liquor will gain in specific gravity so long as the moisture in the gas is prevented from condensing in the absorbing system.

The curve in fig. 293 is calculated on the basis of the figures given in Table 69 (for specific gravities at 15° C. of sulphate of ammonia solutions in pure water), it having been assumed that the mother liquor which is not evaporated will contain about 8 to 10 per cent of sulphuric acid, and that the temperature of the tested liquor will be 75° C.

In connection with the use of specific gravity determinations of hot liquors, it should be borne in mind that the specific gravity is less at high temperatures than at atmospheric. A solution of 36° Tw. (18° C.), for instance, has a specific gravity of 31° Tw. at 80° C.

Due to the greater ease wherewith ammonium sulphate free from sulphuric acid and properly dried can be handled in agriculture, a market price can be obtained for these products very much in excess of the corresponding increase of ammonia content.

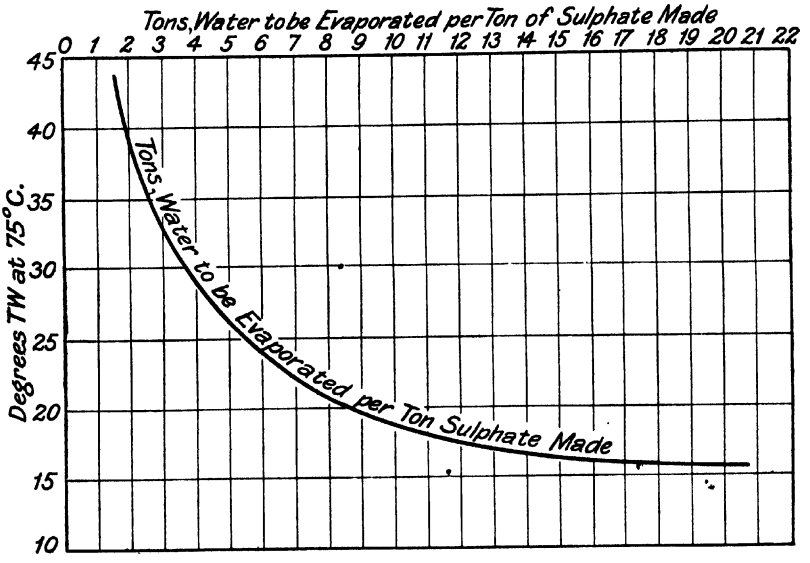

FIG. 293.—SULPHATE EVAPORATION CURVES.

TABLE 69

SPECIFIC GRAVITIES (AT 15° C.) OF SULPHATE OF AMMONIA SOLUTION IN PURE WATER (Lunge)

Per cent.	Sp. gr.	Per cent.	Sp. gr.	Per cent.	Sp. gr.
1	1·0057	18	1·1035	35	1·2004
2	1·0112	19	1·1092	36	1·2060
3	1·0172	20	1·1149	37	1·2116
4	1·0230	21	1·1207	38	1·2172
5	1·0287	22	1·1265	39	1·2228
6	1·0345	23	1·1323	40	1·2284
7	1·0403	24	1·1381	41	1·2343
8	1·0460	25	1·1439	42	1·2402
9	1·0518	26	1·1496	43	1·2462
10	1·0575	27	1·1554	44	1·2522
11	1·0632	28	1·1612	45	1·2583
12	1·0690	29	1·1670	46	1·2644
13	1·0747	30	1·1724	47	1·2705
14	1·0805	31	1·1780	48	1·2766
15	1·0862	32	1·1836	49	1·2828
16	1·0920	33	1·1894	50	1·2890
17	1·0977	34	1·1948	..	..

There are many ways in which such a salt can be obtained, as will be obvious from the various proposals made in the lighting gas and coke oven industries during the last few years.

Here we shall describe only one process which has been in successful operation for four years at a Mond gas plant in Scotland (British Patent 140505, W. J. Chrystal).

Fig. 294 shows in part elevation and part vertical section a diagrammatic illustration of the absorbing vessel employed. By means of a vertical gas- and liquor-tight partition plate 3 the absorbing vessel is divided into two compartments 1 and 2, in each of which sulphate liquor is sprayed into the gas current by means of the rotary spray dashers 4.

In operation the liquor in compartment 1 is allowed to become neutral; then

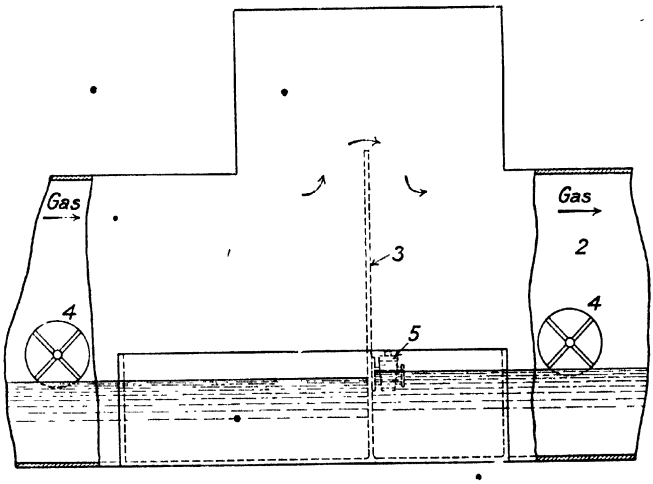

FIG. 294.—CHRYSTAL'S NEUTRAL SULPHATE ABSORPTION METHOD.

a quantity is run off to the liquor storage tanks, while the liquor level in compartment 1 is restored by opening the cock 5, and running in acid liquor from the second compartment 2, in which the liquor is maintained of constant acidity of 2 to 3 per cent sulphuric acid.

In other words, in compartment 1 the gas is used to neutralize the liquor, while in compartment 2 the liquor is used to strip the gas of ammonia.

Although, as mentioned on p. 404, direct cooling and ammonia absorption plants have proved to be the only successful method of treatment of crude by-product producer gas on a large scale, mention should here be made of two systems of indirect types which have been built and actually operated for some time.

Fig. 295 shows a diagram of Thyssen's by-product producer gas plant built in Germany in 1914.[1] This plant consists of mechanical grate gas producer *a*,

[1] Roser, *Z d. V. d. J.*, October 16, 1920.

with tubular air blast super-heater *b*, the gas being cooled in primary and secondary indirect tubular gas coolers *c* and *g*, between which is placed the ammonia saturator *f* (similar to a direct recovery coke oven gas plant). *d* is a tar separator, *h* a water separator, and *e* a gas boosting fan, while *m* is the water tank, and *n* the tar tank. The air is sucked through a filter *l* by the fan *k*, and passed through an air saturator *i* of the direct type, in which it is washed with the hot water obtained by cooling the gas in the gas coolers *c* and *g*.

The advantage of operation of such a plant is mainly to be found in a lower moisture content in the tar; the disadvantages, however, are higher first cost, and that the condensate from the gas in cooler *c* will contain an appreciable amount of ammonia, which it is not economical to recover. As will be seen below, such

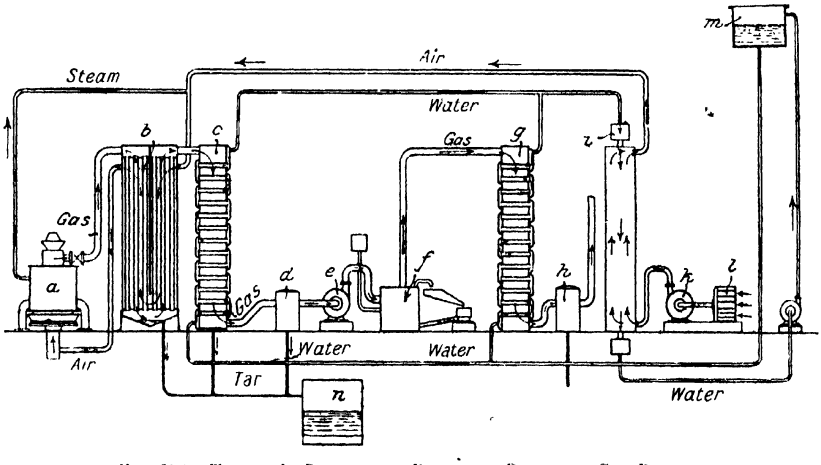

FIG. 295.—THYSSEN'S BY-PRODUCT RECOVERY PRODUCER GAS PLANT.

ammonia loss can be practically avoided if the gas cooler be designed on the reflux principle (with upward instead of downward flow of gas), thereby causing the re-evaporation of any ammonia absorbed from the gas by the condensate.

Figs. 185 and 186 show the Moore type of indirect gas cooling and condensing plant, which consists of a series of small gas cooling tubes, with which the outer air comes in contact, the tar is separated in a P. & A. extractor, while the ammonia is scrubbed out from the gas in two packed tower scrubbers in series. According to information received from the makers, the direct cooling system is now preferred with this type of gas producer plant; as in the case of the Thyssen plant just described, the main condensate (obtained in the atmospheric cooling tubes) would appear to be too dilute in ammonia content to enable the latter to be economically recovered.

PRODUCTION OF AMMONIA LIQUOR

The amount of ammonia gas that can be absorbed in pure water depends upon the temperature and the partial pressure of the ammonia in the gas. Table 70 gives the solubility coefficients of ammonia (viz. grammes of NH_3 absorbed by 100 grammes of water) and carbon dioxide at various temperatures.

TABLE 70

SOLUBILITY COEFFICIENTS OF AMMONIA AND CARBONIC ACID

Temperature ° C.	$\frac{\text{Gr. } NH_3}{100 \text{ Gr. } H_2O}$	$\frac{\text{Gr. } CO_2}{100 \text{ Gr. } H_2O}$
4	80·9	·287
10	68·4	·23
20	51·8	·17
30	40·8	·125
40	33·8	·097
50	28·4	·076
60	23·8	·058
70	19·4	..
80	15·4	..
90	11·4	..
100	7·4	..

The figures given indicate (say at 50° C.) that when *pure* ammonia gas (partial pressure = 760 Hg.) is in contact with pure water, and the two are in equilibrium (complete saturation), then 100 grammes of water will absorb 28·4 grammes of ammonia (*i.e.* the solution would contain 22·1 per cent of ammonia by weight).

But of a producer gas where, say, $\frac{1}{200}$th part is pure ammonia gas (*i.e.* the partial pressure of the ammonia $= \frac{760}{200} = 3{\cdot}8$ mm. mercury), only $\frac{1}{200}$th part of 28·4 grammes of ammonia will be absorbed in 100 grammes of water when the water and the gas are brought into contact at 50° C., the ammonia "solution" thus containing 0·144 grammes NH_3 per 100 grammes of water (*i.e.* a 0·14 per cent solution). Similarly at 4° C. the solution in equilibrium with a producer gas containing 0·5 per cent of ammonia gas will be 0·4 per cent.

Given the temperatures of the gas and water, and the concentration of ammonia in the gas, it is thus easy to determine the quantity of ammonia it is possible to absorb per unit weight of water. Obviously, the larger the quantity of condensate the larger will be the total amount of ammonia removed from the gas, but the higher the temperature of the condensate the smaller will be the total amount of ammonia removed. The higher the saturation temperature of a gas (with a given total

quantity of ammonia) the lower will be the concentration (or partial pressure) of the ammonia gas.

Consequently that indirect type of cooling plant in which the condensate leaving the plant has the highest temperature and is in contact with the hottest gas will contain the smallest amount of ammonia. Such conditions only exist in coolers in which the condensate travels in opposite direction to the flow of gas, viz. coolers of the reflux type. Since the concentration of ammonia in the condensate is so low that its economical recovery is out of the question, reflux coolers only should be employed when it is desired to maintain the ammonia content in the gas leaving the cooler as high as possible.

Given ammonia in a cold producer gas, one might assume from the above statements that it would not be possible to wash it out by water, as completely as is usual in lighting gas practice. This would be correct so long as the producer gas did not contain gases which, when once absorbed in water, would absorb ammonia. Due, however, to the presence of CO_2 in producer gas (of a concentration many times larger than that of the ammonia), the law of partial pressures and the solubility coefficients of either gas cannot be stringently applied for temperatures below 50° to 60° C., since for this temperature range the salts of ammonia and carbonic acid are stable and are absorbed in water more or less independently of the partial pressures of either NH_3 or CO_2 in the producer gas.

To obtain a strong solution of ammonia (mainly as carbonates) it is, however, essential to cool the gas to a low temperature unless very large time factors be allowed for in designing the ammonia scrubbing plant. With clean producer gas the problem of manufacturing ammonia liquor is no different from that in general gas works practice, or in indirect recovery plants used in coke oven practice, to standard works upon which the reader is referred.

PRODUCTION OF AMMONIA SALTS OTHERWISE THAN BY SULPHURIC ACID

Instead of scrubbing out the ammonia in cooled producer gas by water, it is possible to directly wash the gas by, say, nitric or hydrochloric or any other acid solution which would have a reasonable affinity for ammonia and which would not volatilize in the gas. Given a suitably designed absorbing plant, there should be no hindrance against manufacturing other ammonium salts in this way.

Processes which enable the producer gas plant to become independent of outside acid supplies have often been proposed, but none have yet reached a stage of finality.

In 1889 Dr. L. Mond stated that experiments had been made for a considerable time at Winnington with the addition of common salt or brine to the coal charged into the producers, the salt eliminating its chlorine on heating and combining with the ammonia, the latter being recovered as ammonium chloride. This absorption method was substituted by using sulphuric acid, thus eliminating any anticipated corrosion difficulties (due to the formation of free hydrochloric acid), if brine were

added in excess of the ammonia or any loss of unabsorbed ammonia in case insufficient brine were added.

Doubtless with the market prices of sulphuric acid and brine (or salt) such as then existed, there was no particular advantage attached to such a method. With a cheap supply of brine against an expensive supply of sulphuric acid, the same conditions no longer apply. It would appear, however, that this method of absorption has not so far been put into commercial operation anywhere.

The treatment of a calcium sulphate solution by the ammonia and CO_2 has been successfully employed in Germany in the synthetic ammonia industry for the production of ammonium sulphate with simultaneous separation of calcium carbonate. This method of eliminating the use of sulphuric acid can, however, only be applied at high partial pressures of ammonia and CO_2, consequently it would appear that it is not applicable to ordinary by-product producer gas practice.

Processes in which the sulphur in the coal is to be used for the purpose of combining with ammonia, such as the Feld, Cobb, and Burkheiser type, are described on pp. 422-425.

RECOVERY OF TAR FROM BY-PRODUCT PRODUCER GAS

Various means for separating tar from the point of view of gas cleaning have been described on pp. 390-403 ; further, we have seen on p. 405 that tar is separated from the gas in a similar way when cooling the gas in a direct ammonia recovery plant.

In all of these cases the tar contains water as it leaves the cooling and cleaning plant. Previous to submitting such a mixture or emulsion to distillation it is advisable to separate the water by settling, or preferably mechanically, otherwise the distilling plant becomes cumbersome in design and expensive in operation.

Fig. 296 shows a type of centrifugal tar dehydrating machine built by the Sharples Speciality Company, U.S.A., which machine has been successfully employed for dehydrating Mond gas tar.

The machine consists of a revolving bowl 28 suspended vertically on a ball bearing 8 at its upper end, where it also carries a steam turbine wheel 4, by means of which it is rotated at a speed of about 17,000 R.P.M. At the lower end the bowl is guided in a bushing 43, at which point is also fixed the tar inlet connecting pipe 54. The hollow bowl is partially closed at its upper end by an annular plate, to the outer and inner spaces of which are connected two discharge chambers 34 and 26, each fitted with a spout.

On revolution the centrifugal force causes the heavier tar to separate itself from the water, forming, so to speak, a tar cylinder round one of water, the latter being discharged centrally into chamber 26 and tar into chamber 34.

The separation of a low temperature producer gas tar of 1·05 specific gravity and containing 35 per cent moisture into tar containing 1 to 2 per cent moisture can be effected in the course of a few minutes.

To separate as much of the tar from the gas in a hot state, above the dew point

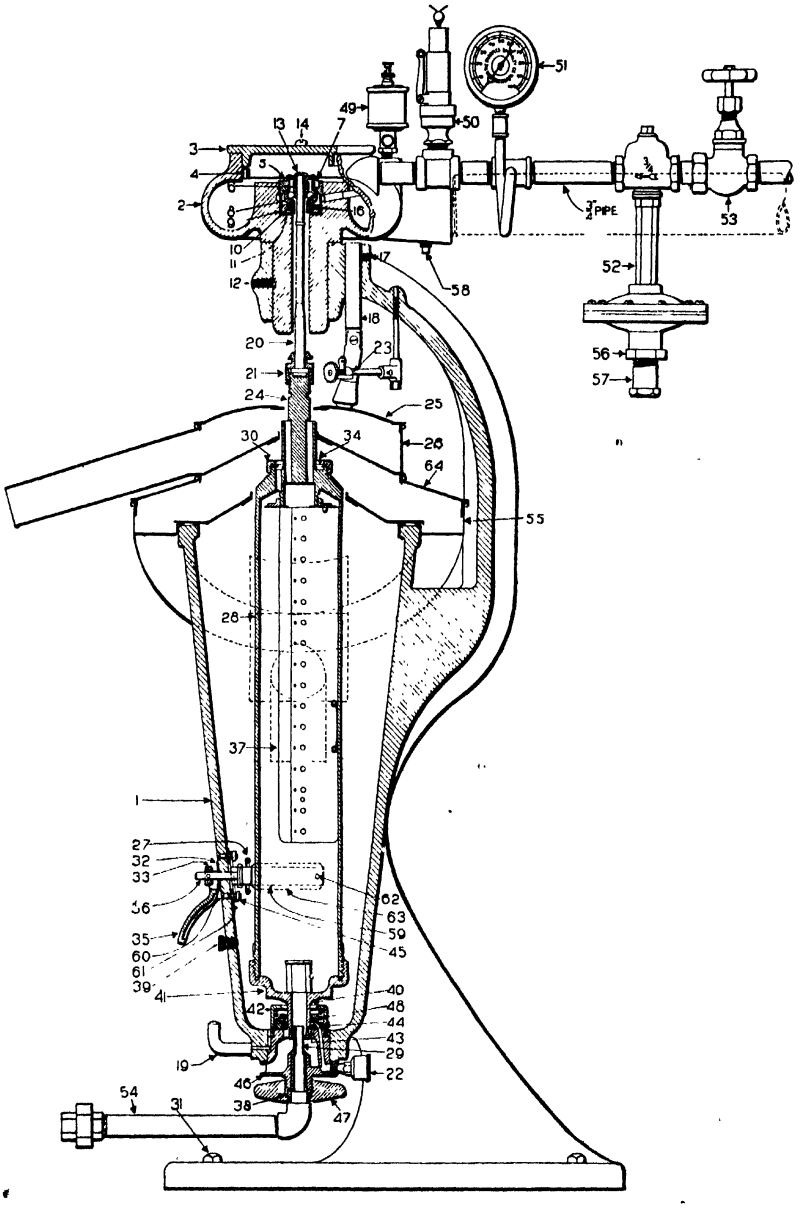

FIG. 296.—TAR CENTRIFUGE.

of the gas (in reference to moisture) many German low temperature tar plants employ centrifugal washers (so-called disintegrators), in which the gas is washed with a hot oil or tar, which strips the main quantity of tar from the gas. Plants in which disintegrators are used for this purpose are shown in figs. 297 to 302.

Fig. 297 shows the tar separating and gas cooling plant which is used on the tar recovery producer built by Akt. f. Brennstoffvergasung for bituminous coal. After leaving the mechanical retort (see p. 300) the gas passes through a dust separator into the disintegrator, to which hot washing tar is supplied from an overhead tar

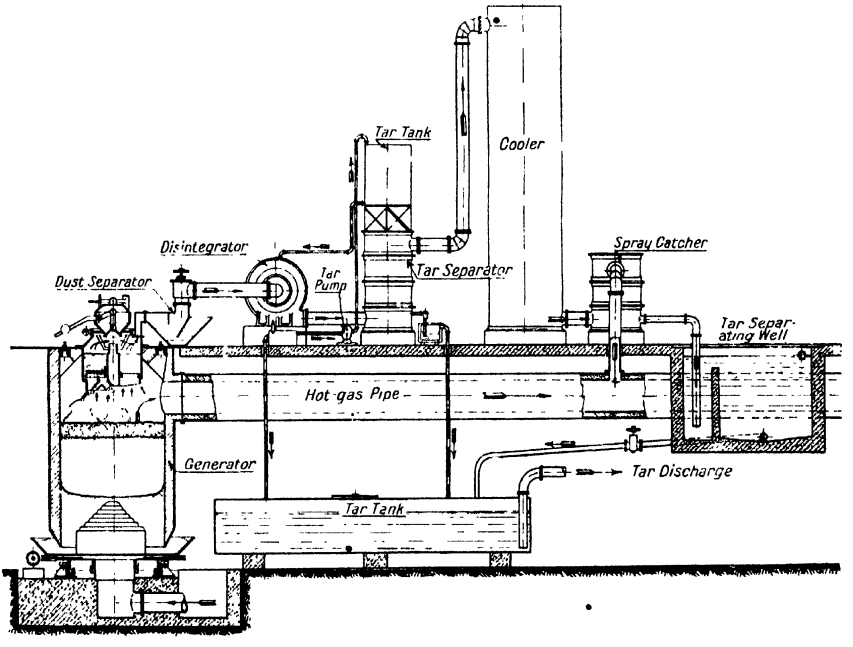

FIG. 297.—TAR RECOVERY PLANT FOR BITUMINOUS COAL (TYPE A.B.V.).

tank and pumped back again after use. Any excess tar is allowed to overflow into an underground tar storage tank.

Previous to entering the cooling tower the gas is passed through a baffle type tar separator, thus ensuring all tar drops being retained. After cooling and separation of any mechanical water spray, the cool and clean gas enters the hot gas main and is thus passed on to the furnaces, together with the coke gas from the producer. The condensate from the cooler is passed into a well, in which the tar is allowed to settle out, and from which it may be passed at will to the underground tar tank.

Fig. 298 shows a section through a plant built by the same firm in connection with the gasification of brown coal (for producer description see p. 186). On leaving the producer the gas passes through large dust separators, then through a disintegrator and vertical tar washer, in which the tar is largely washed out in a hot state. The

gas is finally cooled in two towers, the first one of which is operated in conjunction with an air saturator.

The main point of interest with this design is that it illustrates a method employed for drying the moist fuel previous to introduction into the gas producer, part of the gas being burnt for this purpose in a furnace. In this, air is heated up and passed by an exhauster directly through the pre-drying device arranged above the producer, thereby causing the hot air to saturate itself with moisture from the wet fuel and so drying the latter. In some cases this method is employed for supplying the steam for the producer air blast, in which case the separate air saturator in the gas washing system is eliminated.

Fig. 299 shows a diagram of the gas cooling and cleaning plant used by Allgemeine Vergasungsgesellschaft, for producer gas from moist brown coal. The producer is shown in detail in fig. 199. The gas leaves the producer in an inclined pipe, which discharges into a lute pot and hydraulic valve, connected to a gas collecting main. Tar is separated out in a hot state in a Theisen type

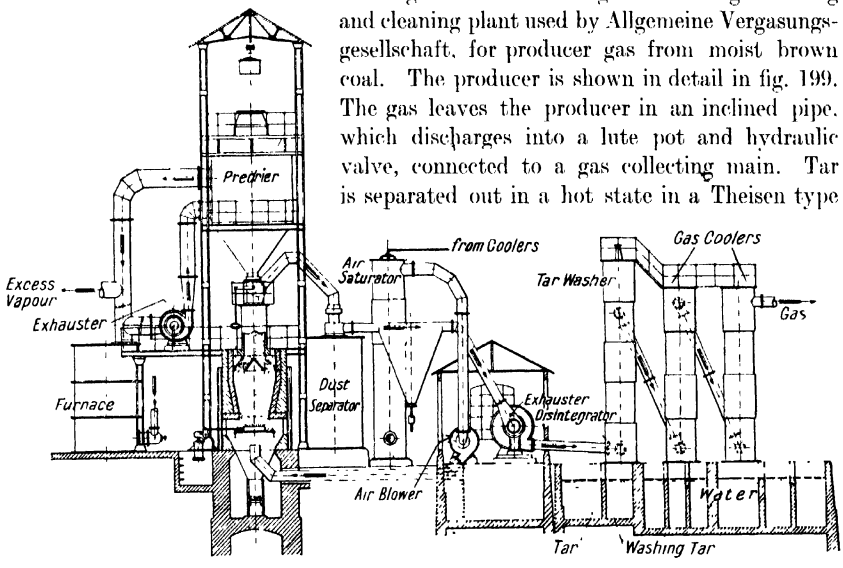

FIG. 298.—TAR RECOVERY PLANT FOR BROWN COAL (TYPE A.B.V.).

disintegrator (see fig. 300), at the outlet of which a tar spray catcher is provided. Leaving the tar separating plant, the gas may be passed through a sulphate ammonia absorber (not shown in diagram), previous to entering the cooling tower. The latter is of the direct cooling type and divided into three compartments, viz. the upper one, which is a gas cooler; the middle one, which serves as an air blast saturator; and the lower one, which is a water cooler. In the upper compartment the water is heated up by the gas, while in the two lower ones the water is re-cooled by air. To obtain an intensive water cooling in the lower compartment air is passed through the same by a low pressure fan and exhausted to atmosphere.

A combined cooling tower of this type is likely to become cumbersome on account of its great height, but if properly dimensioned there appears to be nothing to

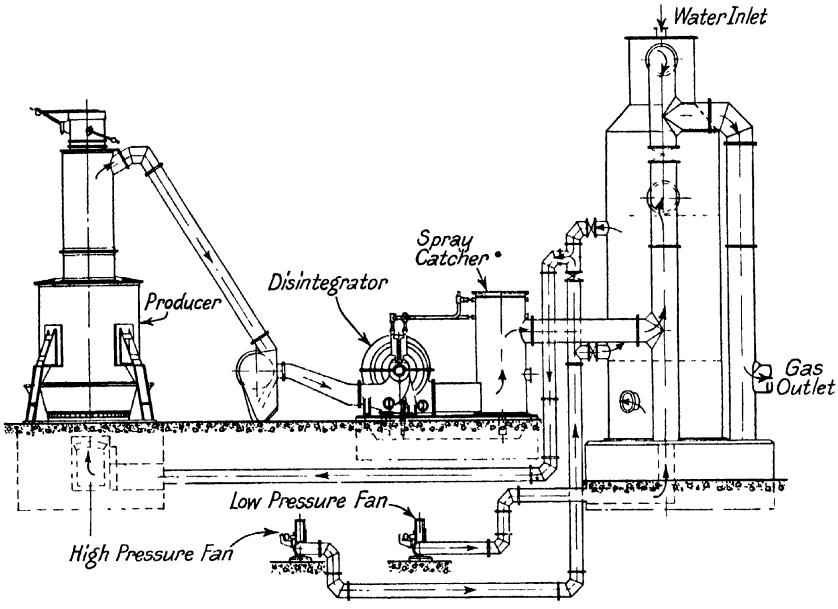

FIG. 299.—TAR RECOVERY AND GAS COOLING PLANT FOR RAW BROWN COAL (TYPE A.V.G.)

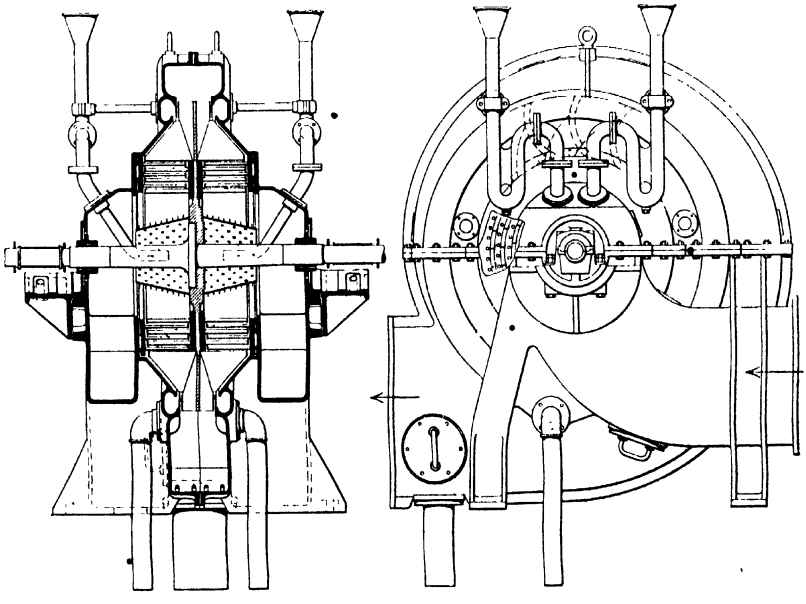

FIG. 300.—THEISEN'S DISINTEGRATOR.

gas is finally cooled in two towers, the first one of which is operated in conjunction with an air saturator.

The main point of interest with this design is that it illustrates a method employed for drying the moist fuel previous to introduction into the gas producer, part of the gas being burnt for this purpose in a furnace. In this, air is heated up and passed by an exhauster directly through the pre-drying device arranged above the producer, thereby causing the hot air to saturate itself with moisture from the wet fuel and so drying the latter. In some cases this method is employed for supplying the steam for the producer air blast, in which case the separate air saturator in the gas washing system is eliminated.

Fig. 299 shows a diagram of the gas cooling and cleaning plant used by Allgemeine Vergasungsgesellschaft, for producer gas from moist brown coal. The producer is shown in detail in fig. 199. The gas leaves the producer in an inclined pipe, which discharges into a lute pot and hydraulic valve, connected to a gas collecting main. Tar is separated out in a hot state in a Theisen type

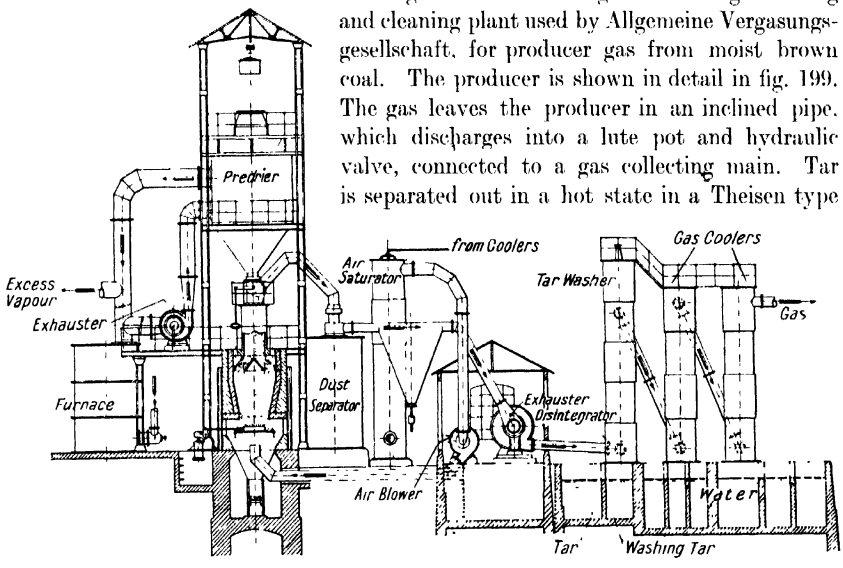

FIG. 298.—TAR RECOVERY PLANT FOR BROWN COAL (TYPE A.B.V.).

disintegrator (see fig. 300), at the outlet of which a tar spray catcher is provided. Leaving the tar separating plant, the gas may be passed through a sulphate ammonia absorber (not shown in diagram), previous to entering the cooling tower. The latter is of the direct cooling type and divided into three compartments, viz. the upper one, which is a gas cooler; the middle one, which serves as an air blast saturator; and the lower one, which is a water cooler. In the upper compartment the water is heated up by the gas, while in the two lower ones the water is re-cooled by air. To obtain an intensive water cooling in the lower compartment air is passed through the same by a low pressure fan and exhausted to atmosphere.

A combined cooling tower of this type is likely to become cumbersome on account of its great height, but if properly dimensioned there appears to be nothing to

After passing through the rotary filter the gas traverses a stationary filter or spray catcher which removes the last tar traces before the gas leaves at outlet connection *g*. On revolving the drum passes through the tar contained in the tank at the base, thus maintaining the tar filtering surfaces clean, while any separated tar is allowed to overflow from the tank. Additional cleaning of the filtering material is effected by an internal tar spray obtained by feeding tar from the overhead tank *a* into the fan rotor, which latter atomizes the tar effectively. The quantity of tar used for this purpose is about 0·15 kg. per cub. m. gas.

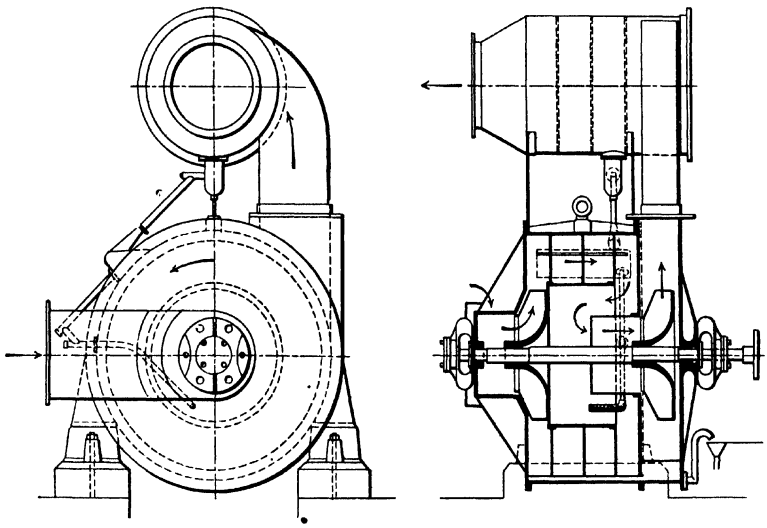

FIG. 301.—HAGER & WEIDMANN'S TAR "WOLF."

A test made on removing tar from producer gas made from peat and brown coal showed the following results :—

Gas passed . . .	3500 to 4000 cub. m. per hour (temp. = 62° C.).
Tar in crude gas . .	25 grammes per cub. m. (96 per cent separated).
Speed of fan . . .	1140 R.P.M.
Power consumption . .	about 3·5 to 4 B.H.P.
Gas pressure increase . .	30 mm. W.G.

With a gas containing more or less coarse dust it would appear that such filters might require periodic replacement; it is, however, claimed that since the filter is always maintained oily by the warm tar there is no tendency to clog up the filters with dust.

POSSIBLE PROCESSES FOR RECOVERING OR REMOVING SULPHUR FROM PRODUCER GAS

As we have seen from p. 115, nearly all the sulphur in the fuel is converted into hydrogen sulphide when the gasification is carried out by a mixture of air and steam. Of this hydrogen sulphide about 50 to 60 per cent is generally retained in the cold clean gas.

At the present market price in Europe of sulphuric acid or of the sulphur-containing bodies used for its manufacture, no great commercial advantages are likely to be obtained by removing the sulphur from the gas as such.

Quite apart from this doubtful value of the sulphur as a by-product, cases do exist in which a gas low in sulphur content is desirable, thus rendering its more or less complete removal an advantage.

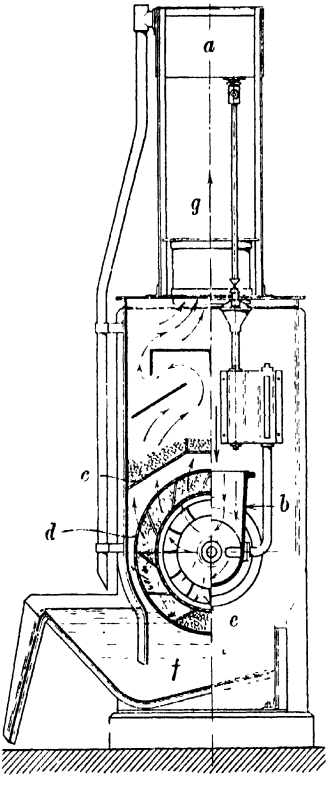

Fig. 302.—Rotary Tar Filter.

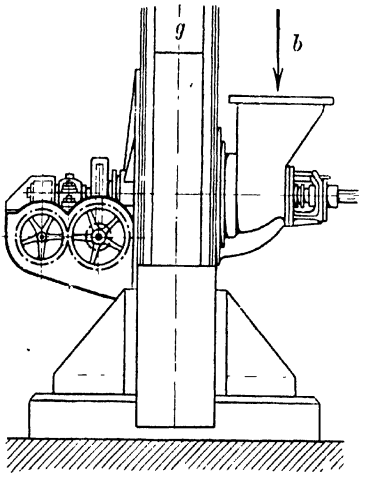

Fig. 303.—Rotary Tar Filter.

Yet another case where removal of the sulphur may become desirable is where sulphuric acid for ammonia absorption is not obtainable at a reasonable market price, and this case does exist in certain colonial districts.

To enable the reader to obtain a general idea as to the principles of various processes either actually used or proposed for the removal of hydrogen sulphide from gases (not particularly producer gas), an outline of the following processes will be given :—

(1) Dry purification by bog iron ore with intermittent aeration.
(2) Wet purification by ferric hydroxide with continuous aeration.
(3) Combined ammonia and hydrogen sulphide removal processes such as—

(*a*) Burkheiser ferric hydroxide process.
(*b*) W. Feld's polythionate process.
(*c*) Prof. Cobb's zinc sulphate process.

(1) This process is the one used in nearly all lighting gas works; it has been successfully employed for producer gas in cases where the cost of removing sulphur from a small quantity of producer gas did not make its application prohibitive.

As is well known, the hydrated iron in the bog iron ore combines with H_2S, forming iron-sulphur compounds; when the material is saturated with sulphur (fouled) it is removed from the purifier and revivified by exposure to the atmosphere (or revivified *in situ*), the iron being reconverted to its hydrated state, and the sulphur being retained in a free state in the mixture.

Since the purifying area required has to be at least five times as large as that used for sawdust scrubbers for bituminous producer gas, it is obvious that the first capital outlay becomes extremely high and causes a considerable increase in the working costs of the producer gas plant.

At present it does not appear that any such process has a future in connection with sulphur removal from producer gas.

(2) With the object of avoiding the interruptions in working caused by revivification of the dry material and to effect a more rapid absorption various processes have been proposed for suspending hydrated iron in water, or other solutions, and for washing the cold and clean gas with such a mixture. The sludge or suspension, after being sulphided by the gas, is passed through a second washer, in which it is washed with air, thus reconverting the iron in the sludge into its active state.

On behalf of the Power Gas Corporation the author has carried out extensive research on removal of sulphur from producer gas by this method.

The plant employed[1] consists of two washers, through which the sludge is passed in series. In the one washer the gas is stripped for hydrogen sulphide, while in the second air is circulated until it is practically stripped of all its oxygen content.

The results shown in table on following page were obtained over a continuous operating period of 365 hours on such a plant using producer gas of about 15° C. temperature, freed from tar and ammonia.

The absorption efficiencies obtained are quite satisfactory to enable the gas from sulphur rich fuels to be utilized without detriment, while the sludge obtained can in its dry state be used for the manufacture of sulphuric acid.

A drawback to the process, as it exists at present, is the cost of supplying absorbing materials, since no cheap method yet exists whereby the sulphur can be extracted from the sludge, and the iron compounds in the same retain their absorbing affinity for hydrogen sulphide.

[1] See British Patents, Nos. 153665, 162554, N. E. Rambush.

No. of Working Hours.	Cub. ft. of Gas treated.	H_2S Content in untreated Gas in gr./cub. m.	Absorption Efficiency.	Per cent free Sulphur in Sludge.
$19\frac{3}{4}$	5367	3·142	74·5	
28	7573	4·222	82·7	
10	3460	5·564	78·7	
$14\frac{1}{2}$	3427	4·121	80·2	
$20\frac{1}{2}$	5947	5·122	72	40
24	6092	4·874	85·5	
24	8996	5·00	77·6	
24	8117	4·251	78·2	
$21\frac{1}{2}$	5267	5·583	84·7	
24	8047	5·568	80·3	
26	9421	4·271	66·8	71·6
$21\frac{1}{4}$	6207	4·297	74·6	
24	6210	6·746	85·9	
24	5773	3·919	68·9	
24	5928	5·848	79·7	73·4
$25\frac{1}{2}$	5683	4·486	76·0	

With the present market prices for sulphur it will be found that a sulphur recovery plant will not yield any appreciable return on the capital invested unless fuels very rich in sulphur are being gasified.

(3*a*) In the Burkheiser process, which has been employed in towns' gas practice, a ferric hydrate sludge is used as the absorbing agent.

By conversion of the absorbed sulphur by burning into sulphur dioxide an ammonium sulphite solution is obtained by combination with the ammonia in the gas. This ammonium sulphite is converted into the sulphate by successive oxidation.

This process is said to be unsuitable for work in connection with producer gas, on account of the high CO_2 content of the latter; while so far as towns' gas plants are concerned difficulties are said to have occurred in connection with the reactivation of the ferric hydroxide.

(3*b*) The Feld process, which has been in use on coke-oven plants in Germany, is based upon the principle of washing the gas with a solution of ammonium polythionates (mainly tetrathionates), which when heated up in the presence of SO_2 gas (made by burning the precipitated sulphur) causes the thionates to decompose into ammonium sulphate and free sulphur.

Very little has been published as to the success of this process, but so far as both this and the Burkheiser process are concerned it is essential to have a clean cold gas containing both sulphur and ammonia, and the latter is to be in excess of the former, in case complete sulphur elimination is required.

Since to retain the ammonia in the cold producer gas is an expensive procedure, it would appear that neither of these two processes is likely to be used in connection with the separation of sulphur from producer gas.

(3c) In Prof. Cobb's process the gas containing ammonia and hydrogen sulphide is washed with a solution of zinc sulphate, whereby the ammonia is converted into ammonium sulphate, and an equivalent amount of hydrogen sulphide is converted into zinc sulphide. The sulphide is separated from the ammonium sulphate solution by filtration, dried, and burnt to SO_2, which in the presence of oxygen (excess air) is passed into a suspension of zinc oxide (remaining from a previous roasting) in water, whereby a zinc sulphate solution suitable for washing the gas is obtained.

In accordance with a recent communication received from Prof. Cobb a plant of this type for making one ton of sulphate of ammonia per day from Mond gas, without the use of sulphuric acid, is being tried out at the works of the Farnley Iron Company, near Leeds.

CHAPTER VI

GAS FLOW PLANT AND APPARATUS

In this chapter we shall not concern ourselves with the detailed design of machinery for causing gas or air flow (such information being obtainable from standard text-books on this subject), but with—

(1) Pressure conditions on gas producer plant.
(2) Quantity and density of gas or air to be handled.
(3) Types of machines used for causing gas flow.
(4) Pressure and volume regulation.
(5) Gas piping and gas distribution.

(1) PRESSURE CONDITIONS ON GAS PRODUCER PLANT

It has been customary for many years to distinguish between *suction gas plants* and *pressure gas plants*, but from the engineer's or the designer's point of view the only real difference between two such plants working under the same load conditions, and using the same fuel, is that the pressure relation between the gas (or air) and the atmosphere differs slightly. The main features of the whole plant, the total pressure loss (or the power required to cause the gas flow), and the gas quality are in no way altered whether "suction" or "pressure" gas is made.

Except in the single instance of a combined gas engine and gas producer, where the suction stroke of the engine causes the gas flow through the plant, it is generally found of advantage to deliver the gas at a certain pressure to the place where it is to be used. Sometimes this gas pressure is obtained by supplying the air and steam mixture at a sufficiently high pressure to overcome the whole resistance in the gas producer plant, the gas and air thus being always at a pressure above the atmosphere. In other cases a gas handling machine is employed, which sucks the air and steam mixture as well as the gas through the producer and cooling plant and delivers the gas at a pressure to the supply mains, the gas thus being partly under suction and partly under pressure. Further cases exist in which the air and steam mixture is supplied under pressure to the producer, while a gas handling machine may receive the gas at a pressure below and deliver it at a pressure above atmospheric.

The particular simplicity attached to a combined gas engine and gas producer plant, *i.e.* a pure suction plant, can only be achieved when a fuel is available which

is of first-class quality, free from volatile matter, and low in ash content, say, an anthracite. In addition to the limitation regarding fuel quality, it is also necessary to dimension all parts of such a plant so amply that the minimum resistance is offered to the intermittent gas flow caused by the suction strokes of the gas engine.

The decision as to the size and type of machine to be used for causing the gas flow depends on many circumstances. The main consideration is the volume and weight of gas or air to be handled, and the resistance of (or pressure loss in) the plant at the required rate of gas flow ; in other words, upon the work to be performed. Furthermore, when dealing with fuels producing tarry matter upon gasification, and when, in addition, a cold clean gas is required, the gas flow machines are often designed with the dual object of cleaning the gas as well as increasing its pressure. If such a combined machine is not capable of overcoming the whole of the plant resistance, it is necessary, in addition, to supply the air blast under pressure to the producer

Except in the case of certain semi-gas-fired furnaces, where, due to very ample dimensioning, all the work to create the gas flow through the fuel bed and flues is effected by the chimney draught, the gas leaving hot crude gas producers must possess such a pressure that the necessary gas flow through piping and flues to the furnace can always be maintained, *i.e.* the pressure of the air and steam mixture is to be high enough to overcome the total resistance of the fuel bed, the producer connections, and the piping and flues.

When dealing with fuels producing a large quantity of dust during gasification, which has to be removed from dry dust separators or scraped away without interruption of the working of the plant, it will be found an advantage to maintain the hot crude gas at a pressure *above* the atmosphere, so that when dust outlets and poking and cleaning holes are opened no air is admitted into the crude gas, the effect of which might cause the formation of explosive mixtures, the ignition of which would have disastrous results. If in such cases the plant is provided with an air handling, as well as a gas handling, machine, it is advisable to introduce pressure controlling appliances whereby the gas, while above, say, 100° to 200° C., is automatically prevented from ever falling below atmospheric pressure.

The addition of a small quantity of air to the gas when under suction, say due to leakages, is of no harm so long as the oxygen content of the gas does not reach or exceed the minimum for explosive mixtures. Indeed it may be rightly said that within limits it is better for the air to leak into the cold gas than for some of the gas to be lost by leaking into the atmosphere.

Speaking generally, there is no danger attached to handling producer gas which is not hot so long as the oxygen content does not exceed 2 to $2\frac{1}{2}$ per cent. In making this remark it should be emphasized that it cannot be considered an advantage to add air to the gas in the producer gas plant, because this means that larger volumes have to be handled with consequent increased power consumption. Furthermore, when air is added to producer gas having a temperature above the ignition point (say at the top of a gas producer), combustion of the gas takes place with consequent thermal loss.

(2) QUANTITY AND DENSITY OF GAS OR AIR TO BE HANDLED

The specific gravity of the gas and the volume of air to be handled for its formation varies with the fuel and the design of plant, as will be obvious from the following table :—

TABL. 71

DENSITIES OF VARIOUS GASES AND THEIR REQUIRED AIR VOLUMES

Producer Type	Slagging Producer	Hot Gas Producer.	Self-vaporizing Producer.	Small Producer.	Semi-Mond Producer.	Low Temp. Recovery Producer.
Fuel	Coke	Coal.	Anthracite	Peat	Coal.	Coal.
Gas Analysis :						
CO_2	1	5	7·5	10	11·0	8·3
CO	33	27	24·0	21	17·5	20·5
CH_4	·5	4	1·2	3·5	3·3	5·5
H_2	1·0	12	16·5	13	21·5	20·5
N_2	64·5	52	50·8	52·5	46·7	44·9
Specific gravity of gas at N.T.P. in reference to—						
Dry air at N.T.P.	0·96	0·87	0·858	0·892	0·823	0·804
Kg. per cub. m.	1·243	1·126	1·109	1·153	1·063	1·040
Specific gravity of gas at 15° C. and saturated, in reference to—						
Dry air at N.T.P.	0·917	0·822	0·810	0·841	0·777	0·76
Kg. per cub. m.	1·171	1·062	1·046	1·087	1·003	0·982
Volume of dry air (N.T.P.) required per volume of dry gas at N.T.P.	·818	·659	·644	·665	·592	·568
Volume of air saturated and at 15° C. required per volume of dry gas at N.T.P.	·877	·707	·690	·713	·635	·610

NOTE.—1 cub. m. of dry air at N.T.P. weighs 1·293 kg., and is assumed to contain 79 per cent N_2 and 21 per cent O_2.

The volume of air required per unit volume of gas of a given analysis can always be calculated on the basis of the nitrogen content of the latter. Since the nitrogen content of the fuel itself represents an extremely small fraction of the total nitrogen in the gas, it is sufficiently accurate for practical purposes to assume that all the nitrogen contained in the gas originates from the air. In other words, for a gas containing 52 per cent N_2 the air required for gasification $= \frac{100}{79} \times 52 = 65{\cdot}9$ per cent of the gas volume.

To obtain a standard of comparison for all gases it is usual to refer these to their dry volume at *normal temperature* and *pressure* (N.T.P.), viz. a temperature of 0° C. and an absolute pressure of 760 mm. mercury gauge, but neither the gas nor the air to be handled in practice will ever be in this state.

The effect of the *moisture* content upon the gas volume may be considerable, especially in hot humid climates, or when the gas to be dealt with is insufficiently cooled. By reference to Table 67 on p. 270 the volume increase due to the moisture content of saturated gases may be readily determined for all gases having an absolute pressure of about 760 mm. Hg. If the gas or air is supplied at a temperature above its saturation temperature, the necessary volume correction may be made by treating the expansion of the gas from its saturation point to any higher temperature, as in the case of the expansion of a permanent gas.

The effect of the *temperature* upon the gas or air volume may be of importance in hot countries or when the gas is handled hot. Correction for volume alteration due to heat is made in accordance with Gay-Lussac's law, which states that when under constant pressure the thermal expansion of a permanent gas is proportionate to the ratio between the absolute temperatures of the gas previous to and after expansion, *i.e.* for each degree Centigrade rise in temperature, the gas expands $\frac{1}{273}$rd part of its volume.

The effect of *pressure* upon the gas or air volume is generally not of any great importance, since the pressure difference between the gas and the atmosphere at the various stages of the plant is mostly low. The effect of variation in the atmospheric pressure (at different altitudes) may, however, have a considerable influence upon the gas volume, which is inversely proportionate to its absolute pressure. The influence of varying altitude is seen from the following figures :—

Elevation above sea level	metres .	0	200	500	1000	1500	2000	3000
	feet .	0	656	1640	3280	4920	6560	9850
Barometer pressure in mm. mercury		760	742	716	674	635	598	..

Not only does an alteration in pressure affect the gas volume in this direct way, but since the ratio between steam and gas in a saturated gas mixture increases with a decrease in pressure, the effect of the pressure upon the quantity of water vapour that will be retained in a gas cooled by direct contact with water must also be borne in mind.

The following will serve as an example upon the application of the above statements :—

Assume that a gas or air having a dew-point temperature of 25° C. and an actual temperature of 45° C. is to be handled in a plant elevated 1500 m. above sea level.

Volume of dry gas at N.T.P.	= 1
	mm. Hg.
Barometer pressure at 1500 m. altitude	= 635
Partial pressure of water vapour at 25° C. (Table 67) .	= 23·5
Partial pressure of air or gas	= 611·5

Actual gas volume :

$$1 \times \frac{760}{611 \cdot 5} \times \frac{273 + 45}{273} \quad . \quad . \quad . \quad . \quad . \quad . \quad . \quad = 1 \cdot 45$$

In other words, the gas volume under these assumed conditions is 45 per cent larger than the standard basis of volume.

In deciding the size and type of machine to fulfil the duty of handling the gas or air, it is not only necessary to allow for a machine of ample volume capacity, but it should also be examined whether the desired pressure can be attained therewith. On most machines it will be found that the pressure difference obtained under certain operating conditions alters with the density of the gas. Consequently the highest and lowest density (or specific gravity) of the gas or air handled by the machine should be defined. Thus for calculation of the expected power consumption the highest density should be assumed, while the lowest density is better used as a basis for the pressure calculation.

(3) TYPES OF MACHINES CAUSING GAS FLOW

We may subdivide these into three classes, viz. :—

A. The jet blowers,
B. The centrifugal blowers,
C. The positive rotary blowers,

the first one being an entirely static apparatus, while the latter two are mechanical devices.

A. The *jet blowers* are the cheapest in first cost and upkeep charges, and the most simple to operate of all. The kinetic energy of a jet of steam flowing out from a nozzle is used to induce air from the surrounding atmosphere, and by a successive expansion of the current of air and steam mixture its velocity head is partly converted into pressure head (manometric or static head) of sufficient magnitude to overcome the plant resistance.

The steam consumption is generally considerable and mostly very much in excess of that equivalent to the production of the power required for supplying the air current by mechanical means. When the blast has to be supplied at pressures above 6″ to 8″ water gauge the steam consumption may become so excessive as to render the use of a jet blower prohibitive.

But so long as the steam consumption does not exceed that which in any case is required for admission to the producer, it is clear that no waste is taking place and no simpler machine could be used for blowing.

In the cases of producers working under very fluctuating load conditions, or where the resistance of the plant is likely to vary considerably, the ratio of steam to air will alter, since the steam consumption increases considerably with the pressure. Jet blowers should for this reason be provided with auxiliary steam supply, or air

throttling device, so that the desired blast temperature can always be maintained or controlled independently of the pressure jet.

Whenever jet blowers are used, or whenever steam is supplied from a main in which the pressure is liable to fluctuate, a reducing valve should be installed, so that when the steam valves are once set for a certain load the gas composition will be independent of any steam pressure fluctuations in the supply main.

Fig. 304 shows the Meldrum type of steam jet blower, which serves as an example of a simple and plain design. Steam enters the blower through a nozzle A, while air is sucked in from the annular space surrounding the nozzle, the mouth of which is slightly below the circular air opening. The velocity of the steam and air mixture is gradually decreased in the trumpet B, whereby the necessary static head of blast is obtained.

To economize in steam consumption blowers of the types shown in figs. 305-307 are used, all of which are mainly based upon the principle laid down in the original Korting type of jet blowers, viz. that the air is sucked in in successive stages, the mixture from each stage forming a jet for injection of the air for the next stage.

Fig. 305 shows the Ledward type of steam jet blower. Steam enters through pipe A, while air is sucked in at B, and the blast mixture leaves at C. A funnel-shaped casting D (open at the top at B) surrounds the series of successive jets E, giving ample space for the inrushing air. F is a hand wheel for operating a regulating valve for the steam supply whereby the discharge orifice for the steam can be modified to suit the load conditions.

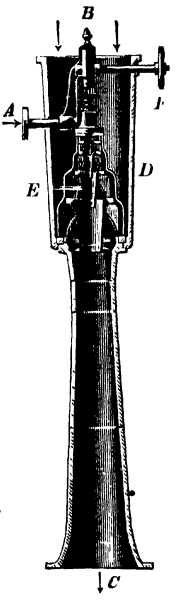

Fig. 305.—Ledward-Beckett Steam Jet Blower.

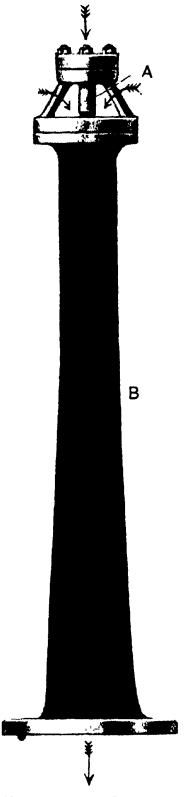

Fig. 304.—Meldrum Steam Jet Blower.

Such an arrangement is preferable to that of an orifice of fixed opening and regulation by an ordinary steam stop valve; the orifice for the latter arrangement always has to be large enough to discharge the steam required for the maximum pressure and quantity of air. Consequently, when the air consumption is reduced, due to low load, the steam will be wire-drawn in the stop valve and reach the orifice at a reduced pressure, and consequently the kinetic energy of the steam jet, in reference to the air volume, will be reduced.

Tests made with a Ledward jet blower handling 250 cub. ft. of free air per minute showed the following results :—

Steam Consumption, Lbs. per Hour.	Air supplied against a Pressure of
55	2″ W.G.
110	4″ ,,
145	6″ ,,
220	10″ ,,

When a smaller quantity of air is to be delivered this is obtained by throttling on the air inlet, while so long as the same back pressure exists the steam quantity will remain constant.

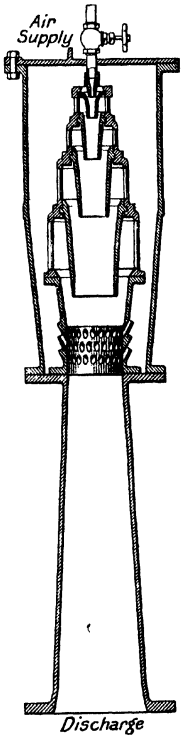

Fig. 306.—Eynon-Evans Steam Jet Blower.

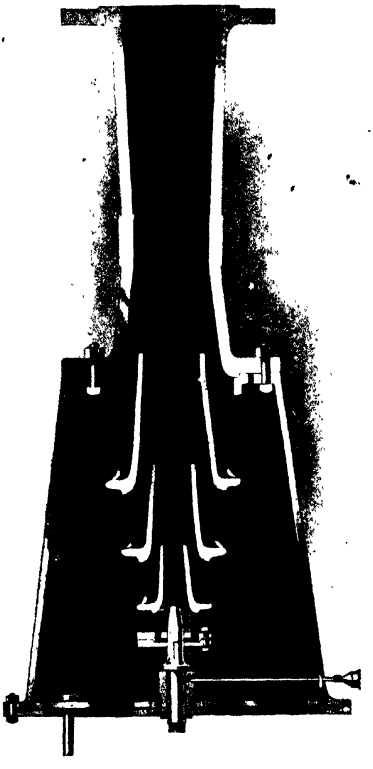

Fig. 307.—Wellman Steam Jet Blower

Fig. 306 shows Eynon-Evans jet blower, a discharge curve of which is shown in fig. 308. It differs from the Ledward type in that a series of small holes are provided at the base of the expanding trumpet and that the air inlet opening can be adjusted in size.

Fig. 307 shows Wellman's jet blower, such as is used on the Hughes producer

shown in fig. 140. Except that it is used in an inverted position and therefore that the condensate drains against the flow, and that the expanding trumpet is relatively short, it embodies similar features to the two previously described types.

Fig. 308 shows two curves representing test results of the Eynon-Evans blower when the steam orifice was $\frac{9}{32}''$ and $\frac{7}{32}''$ respectively. On the diagram air velocity (as ordinate) is plotted against steam gauge pressure as abscissae. As the quantity of steam discharged (under the same pressure conditions) is, practically speaking, proportionate to the area of the jet, it will be evident that the ratio of air to steam (blast saturation temperature) is not constant.

Take, for instance, the conditions of the two jets at 25 lbs. steam pressure, at

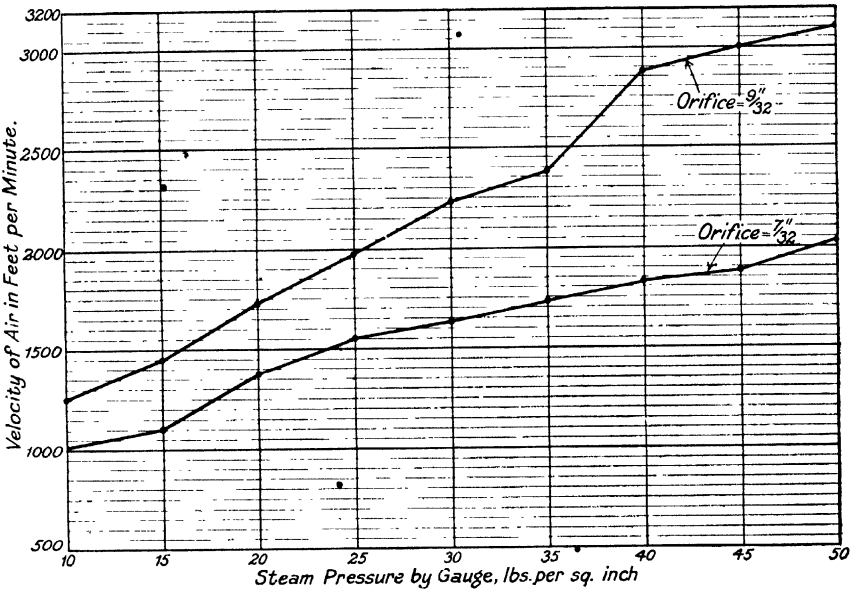

FIG. 308.—TEST CURVE OF EYNON-EVANS JET BLOWER.

which the air velocities are 1960 ft. and 1540 ft. per minute respectively, *i.e.* the large nozzle will discharge an air volume which is increased 26 per cent, whereas the steam discharge is increased as $\left[\frac{9}{7}\right]^2$ or 63 per cent, *i.e.* the saturation temperature for the large jet is higher than for the small jet.

A good idea as to the effect of varying steam pressure upon the pressure of the blast mixture can be obtained from fig. 309, which gives the results of two series of tests upon a jet blower used on the Chapman producer (fig. 134). The curves in full lines refer to the use of a $\frac{1}{2}''$ diameter nozzle, while the dotted lines indicate the results with a $\frac{7}{16}''$ nozzle. The curve series to the left show the variation in pressure obtained, while the series to the right show the total volume of steam and

air handled. The Chapman blower is provided with an air throttle, and each series of three curves refers to varying air inlet openings.

If we study the conditions when the steam is discharged at 60 lbs. pressure we see :—

Pressure in W.G.		Discharge cub. ft. per min.	
Curve I.	6″	Curve I.′	2000
,, III.	4·2″	,, III.′	2425

i.e. for higher pressures less air can be blown into the producer with the same amount of steam, or the steam quantity in the blast will increase with the pressure to be overcome.

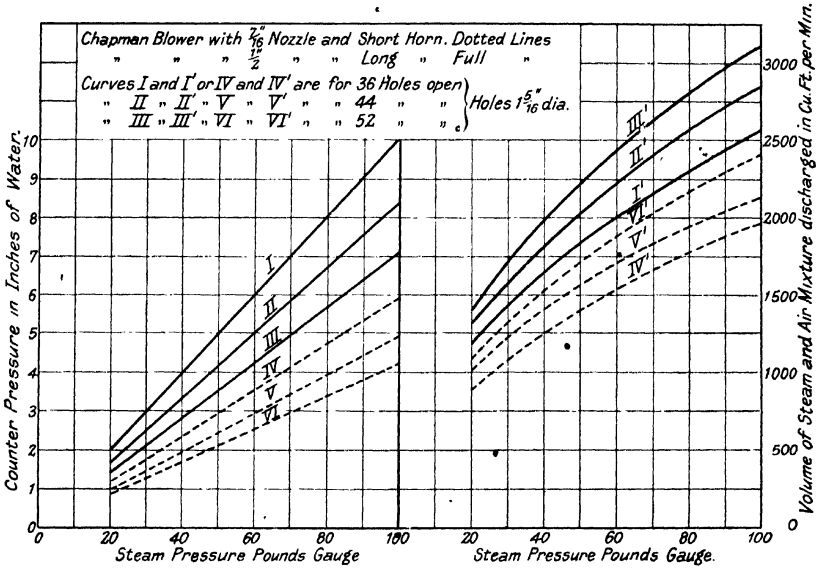

FIG. 309.—TEST CURVE OF CHAPMAN JET BLOWER.

Actually each design and type of jet blower will have its own specific pressure and volume characteristics, which will vary with the shape of the steam nozzle, the cones in the jet blower, and the length and taper of the expanding trumpet.

Regarding the velocity and quantity of steam discharged through various sizes of nozzles, suffice it to say here that the velocity of the steam discharged from an orifice will increase with the pressure difference existing between the two sides of the orifice until the so-called critical pressure difference is reached, which for saturated steam is 11 to 12 lbs. gauge pressure $\left(\text{ratio } \frac{\text{abs. external pressure}}{\text{abs. steam pressure}} = 0{\cdot}5774\right)$. Above this critical pressure the steam velocity will remain constant (about 440 m./sec.),

no matter how much the difference of pressure is increased. The reason for this is that the pressure in the plane of the escape opening of the orifice always remains in the same ratio to the steam pressure (viz. 0·5774 for saturated steam); whatever extra pressure the steam therefore possesses at the plane of the escape opening causes the steam jet to expand without any relative increase in its kinetic energy. If higher discharge velocities are to be obtained from an orifice it is necessary to provide this with an expansion nozzle, similar to that used in a De Laval turbine jet, thus imparting to the jet a higher kinetic energy.

The weight of steam discharged from an orifice does not, however, remain constant *above* the critical pressure, but increases in direct proportion to its specific gravity (or its pressure).

With a plain discharge orifice the total kinetic energy of the jet does increase above the critical pressure (or velocity), not because the velocity is increased but because the mass is.

B. *The Centrifugal Blowers or Fans.*—Whereas jet blowers are now exclusively used for handling air, the centrifugal or fan-type blowers are also used for handling the gas.

The distinction between a centrifugal fan and a centrifugal blower is just as difficult to determine as the distinction between a centrifugal blower and compressor. So far each manufacturer arbitrarily decides at which pressure his machine is to be sold as a "blower" or as a "fan." In most cases the pressures against which such machines are arranged to work in gas producer plants do not exceed 15″ to 20″ W.G., which pressures may be said to come within the range of a low pressure blower or a high pressure fan.

A centrifugal blower consists of a fan *casing* of mild steel or cast iron carrying one or more bearings for the shaft of the impeller or fan *rotor*. When used for gas the casing contains flanged inlet and outlet gas connections, and when used for air only an outlet connection to the air main is provided, the air from the atmosphere being allowed to enter through a central opening in one or both sides of the fan casing. Except for this adaptation there is no vital difference between the designs of fans used for handling air or gas.

The gas or air enters the machine axially, and in passing between the vanes or blades of the rapidly revolving rotor the centrifugal force which is thus imparted to it is converted into a static, as well as a velocity head of pressure. To enable the velocity head of the air or gas particles to be converted into a static head, the casing round the outer edge of the rotor is generally shaped as a spiral of circular cross section, thus providing a properly tapered expansion chamber or so-called diffuser. Fans without a diffuser chamber have always a lower efficiency and are therefore very seldom employed in modern plant.

By altering the number and shape of the impeller vanes it is possible to obtain operating results to suit very different conditions. The principle of fan vane designs cannot be gone into in detail here, but reference is made to fig. 310, which shows, by way of example, five typical designs.

The shape A is the simplest to make, but having straight radial vanes the

efficiency is not as good as the shape shown in B, where the inner part of the vanes is slightly curved.

The shapes shown in C and D are suitable for fans with no (or inefficient) diffusing chambers, since the edge velocity of the gas leaving the tip of the vanes

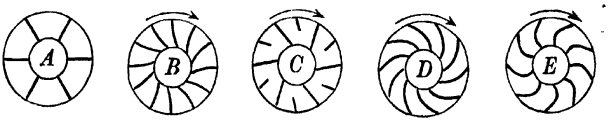

FIG. 310.—DIAGRAMS OF FAN IMPELLERS.

is smaller than for shapes A and B. This is particularly applicable to the shape in D, which is preferable for gas washing fans working at low pressure differences.

The shape shown in E imparts a higher velocity to the leaving gas particles (for the same fan speed), and is therefore suitable in cases where a high pressure is the main object.

Figs. 311 to 313 show some examples of centrifugal air-blowing fans.

FIG. 311.—BELT-DRIVEN CENTRIFUGAL AIR BLOWER.

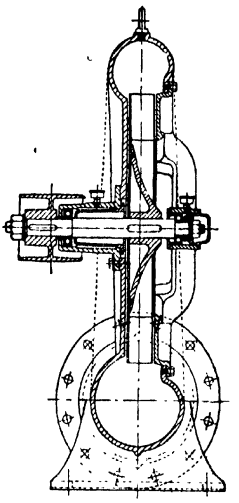

FIG. 312.—SECTION THROUGH AIR BLOWER.

Fig. 311 gives a good idea as to the spiral shape of the diffusing chamber. The air enters at both sides of the impeller, while the fan casing is made in four sections, the top half being removable for inspection or repair of the rotors.

Fig. 312 is a section through a belt-driven air-blowing fan as made by Messrs. Keith & Blackman. This is of the single inlet type, and therefore provision must be made in the shaft and bearings to take up the slight end thrust caused

thereby. The difference in the cross-sectional areas of the diffusing chamber will allow for a good conversion of the velocity head into pressure.

Fig. 313 shows a large air fan arranged for direct motor drive, the two machines being placed on one common bedplate.

Fig. 314 shows a belt-driven high-pressure gas boosting fan, such as is used on many gas producer plants for handling cold and clean gas. The gas enters at a flange on one side of the casing, while a drain for condensed moisture and any

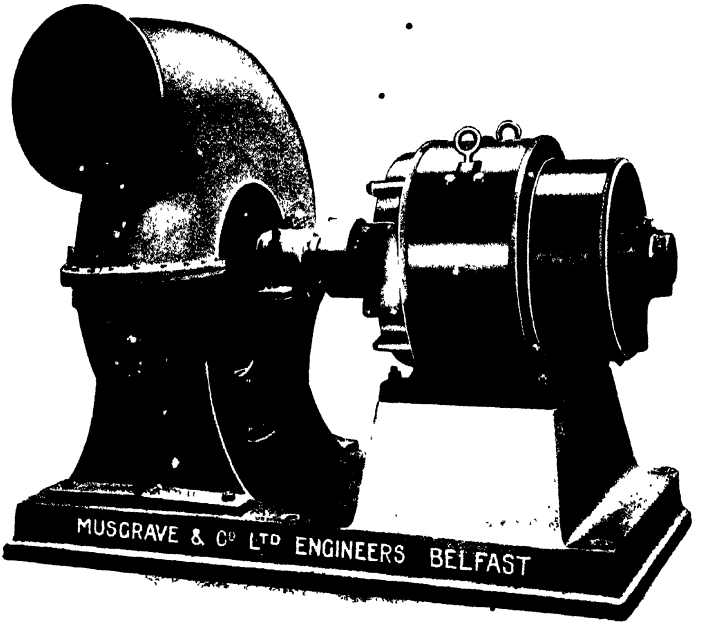

FIG. 313.—MOTOR-DRIVEN AIR FAN.

tarry impurities is provided at the base. The whole of the side of the fan casing with gas inlet branch can be removed for inspection and cleaning of the impeller.

Other types of centrifugal fans which serve the object of simultaneously cleaning the gas are shown in figs. 283, 300, and 301.

Whether the gas or air is supplied to a given fan under suction or under pressure, the difference in pressure at inlet and outlet flanges of the fan will be the same (for the pressure conditions existing on most producer gas plants), so long as the specific gravity of the gas and the speed of the fan remain constant.

The *pressure* difference set up by the fan *varies directly* as the *specific gravity* of the gas. If therefore a fan designed for handling air is to be used for handling

gas of 0·75 sp. gr. (ref. air) the gas pressure produced under the same speed and volume conditions will be three-quarters of the air pressure.

An alteration in the fan *speed* will affect the volume passed, the pressure difference, and the horse power. The *volume* varies *directly* as the speed, therefore if the speed is increased 10 per cent the volume passed is increased 10 per cent. The *pressure difference* varies directly as the *square* of the speed, so that if the speed is increased 10 per cent the pressure difference is increased 21 per cent. Alternatively if a gas of 17·5 per cent less specific gravity were to be handled, a 10 per cent speed increase would enable the fan to give the same pressure as with the heavier gas.

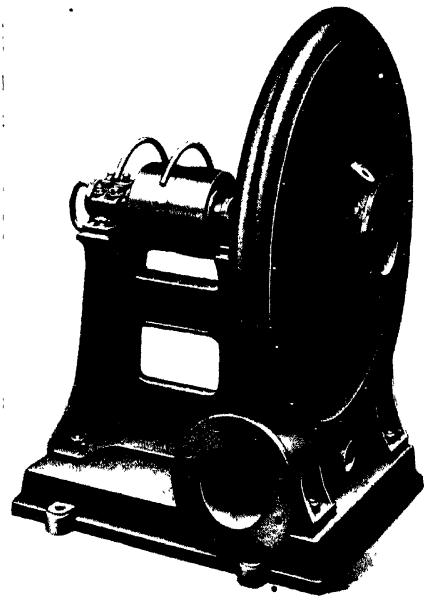

FIG. 314.—CENTRIFUGAL GAS BLOWER.

The horse power of a fan for handling gas may be expressed as :—

$$N = \frac{V \times h}{e \times 6250},$$

in which V = the volume passed in cub. ft. per minute.
h = the pressure difference in inches water gauge.
e = the efficiency, which may be as high as 80 per cent for the most favourable conditions, but may be as low as 40 to 50 per cent.

From the equation it will be clear that the *horse power* varies *directly* as the *cube* of the speed, so that a 10 per cent speed increase will require a 33 per cent increase in the power consumed.

The table on following page will serve as a practical illustration of the above remarks. It represents figures given by Messrs. Davidsons as to the volume and pressure capacities as well as power requirements of their "Sirocco" fans when used for air.

To explain further the operating conditions of a fan and in particular their effect upon the regulation of the working of a gas producer plant, the pressure volume characteristics of two different types of gas handling fans are shown in figs. 315 and 316

Fig. 315 represents the test results obtained on a gas washing fan such as referred to and shown in fig. 290, and of a rated capacity of 3000 cub. ft. per minute. This fan is designed mainly for the purpose of obtaining an efficient gas washing and not particularly with the object of pressure efficiency. It will be seen that

Diam. of Fan Rotor.	20″			25″			30″			35″		
W.G.	Vol.	R.P.M.	B.H.P.	Vol	R.P.M	B.H.P.	Vol.	R.P.M	B.H.P.	Vol.	R.P.M.	B.H.P.
6 ins.	700	1400	1¼	1270	1110	2¼	1980	925	3½	2830	800	5
8 ,,	820	1600	2	1470	1280	3½	2280	1070	5¼	3260	920	7½
10 ,,	910	1800	2¾	1640	1430	4¾	2550	1200	7½	3650	1020	10¾
12 ,,	1000	1970	3½	1800	1570	6¼	2800	1310	9¾	4000	1120	14
14 ,,	1080	2130	4½	1940	1700	8	3020	1410	12½	4300	1210	17½
16 ,,	1160	2280	5½	2080	1810	9¾	3230	1510	15	4600	1300	21½
18 ,,	1230	2420	6½	2200	1920	11½	3430	1600	18	4900	1370	26
20 ,,	1300	2550	7½	2320	2030	13½	3620	1690	21	5160	1450	30
22 ,,	1360	2670	8¾	2440	2120	15¾	3800	1780	24½	5400	1520	35
24 ,,	1420	2780	10	2540	2220	18	3960	1850	27½	5650	1590	39½
26 ,,	1470	2900	11¼	2650	2310	20	4120	1930	31½	5900	1650	45
28 ,,	1530	3000	12½	2750	2400	22½	4280	2000	35	6100	1710	50
30 ,,	1580	3120	14	2850	2480	25	4420	2070	38½	6340	1770	56

within the capacity range of 0 to 3000 cub. ft. per minute the fan will set up a nearly uniform pressure difference of about 6″ water gauge. On the other hand, if the flow of gas through the fan be increased to, say, 6000 or 8000 cub. ft. per minute the pressure difference yielded by the fan will be negligible. At the same time, the

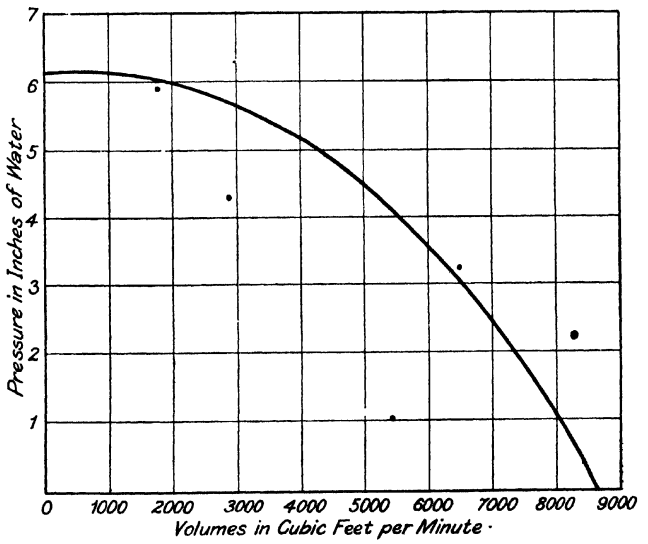

FIG. 315.—PRESSURE-VOLUME CHARACTERISTIC FOR A GAS WASHING FAN.

fan efficiency drops considerably with the increase in load, with the consequence that the power consumption is very much higher.

It should be realized that whatever quantity of gas may be supplied to or removed from a centrifugal fan, the same will let it pass through so long as the

corresponding pressure differences between the fan inlet and outlet connections are maintained. Under such operating conditions there is a possibility of overloading the machine driving the fan, which should be borne in mind, especially when designing plants in which the fan is not the only machine which effects the flow of gas and where accidental overload conditions are possible, say, due to sudden resistance alteration in the plant.

The curves shown in fig. 316 relate to test results obtained on a gas boosting fan, *i.e.* a machine which is designed with the main object of giving a high pressure (or manometric) efficiency. The curves in full refer to the relation between the pressure and the volume obtained at varying speeds, while the dotted curves refer

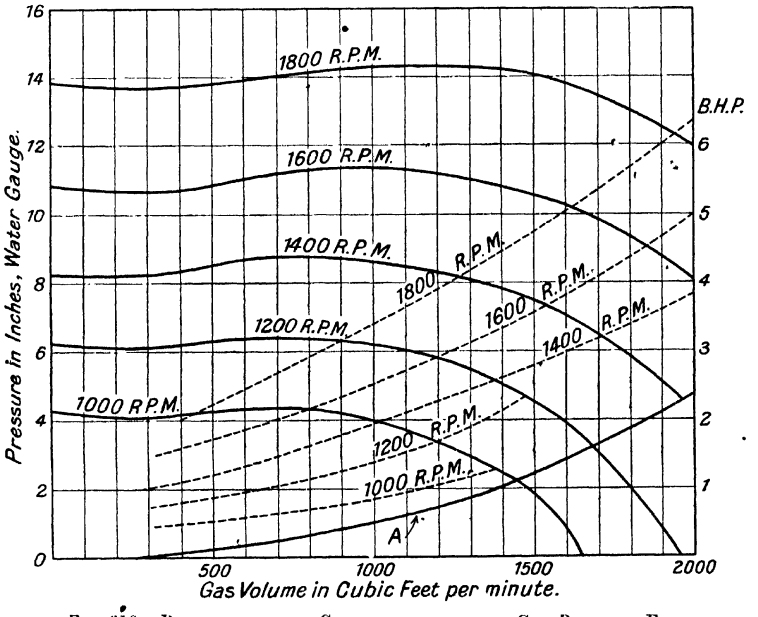

FIG. 316.—PRESSURE-VOLUME CHARACTERISTIC FOR A GAS BOOSTING FAN.

to the relation between the power consumption and the volume at the same speeds. By comparison between these pressure volume curves and that shown in fig. 315 it will be seen that the shape is entirely different, inasmuch as the volume range for uniform pressure difference is very much larger and that the falling off of the pressure with increase in volume (above the uniform pressure range) is more rapid.

The curve A (in full lines) at the base, intersecting with the pressure curves, represents the velocity head still remaining in the gas at the fan outlet pipe, which may be recovered as static head if a suitable conical expansion piece be attached (a continuation of the diffuser).

When high gas or air pressures are required and the installation of a centrifugal blower becomes inadvisable, due to the consequent high speed of a single centrifugal

fan, or the higher cost of a multi-stage fan, or other reasons of preference, positive blowers are commonly used on producer gas plants. These machines differ from the centrifugal blower not only in construction and operation, but also in the fact that the relation between speed, pressure, and volume is entirely different.

The multi-stage centrifugal blowers or fans do not differ from the single stage fans in the principle of their design or operation, since in practically all cases they consist of two or more single impellers arranged in series, the gas from the diffuser of one impeller entering the centre of the next impeller. There is no limit as to either pressure obtained or number of stages, nor are the multi-stage blowers confined to large units; for instance, the Syracuse Industrial Gas Co., U.S.A., supply a slow-speed twenty-stage fan blower giving an air pressure of up to 4 lbs. per sq. inch for such small capacities as 10 to 30 cubic feet per minute.

C. *The Positive Rotary Blowers.*—These machines are made for pressures up to 5 lbs. per sq. inch, and consist of a cast-iron casing inside which revolve either—

(*a*) Two rotating members (called rotors), the profile of which is designed on the principle of a gear wheel with two teeth, the spaces between the "teeth" being the air or gas compression space.

Or

(*b*) One cylindrical drum placed eccentrically in the cylindrical blower casing, but provided with two or more sliding vanes which on revolution "scrape" the gas or air in the crescent-shaped space between the casing and the drum forward from suction to pressure branch.

The most commonly employed blowers of the twin rotor class are those of the Roots type, of which examples are given in figs. 317-320.

Fig. 317 shows a section through the most common form of this machine, while photographs of machines of this type are shown in figs. 319 and 320. The air is sucked in through the filter at the top into a casing of oblong cross section, at the end plates of which are supported the two shafts, upon which the opposite revolving rotors are fixed; these two shafts are provided with a set of external gear wheels of ordinary type, generally running in an oil bath, thus ensuring that the relative movement of the two rotors is always maintained. To make a reasonably tight joint between the rotors as well as the casing, a narrow ledge is provided along the largest diameter of the rotor. The pressure at which the air can be supplied (as well as the "slip" of the machine) depends upon the tightness of this running joint.

For each revolution of the rotors a volume equal to 4 V should be passed forward to the air outlet branch at the base were it not for the "slip." The ratio of leakage to volume passed increases with the pressure difference and inversely with volume passed, thus at very high pressures and slow speed the slip may be considerable. For average operating conditions, with, say, a maximum air pressure of 24″ W.G., the slip should not exceed 30 per cent. Machines of this type generally do not work at more than about 300 R.P.M., while for continuous working conditions

about two-thirds of their rated speed is more suitable, at which speed the efficiency for average size blowers will vary between 60 and 70 per cent.

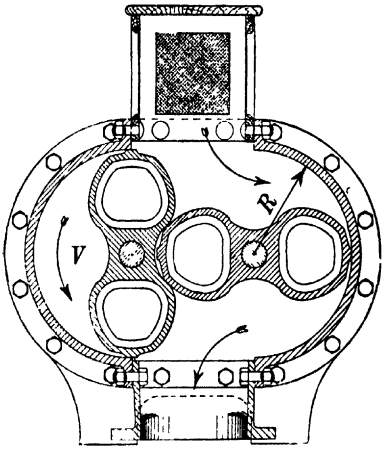

Fig. 317 —Section through Roots Blower

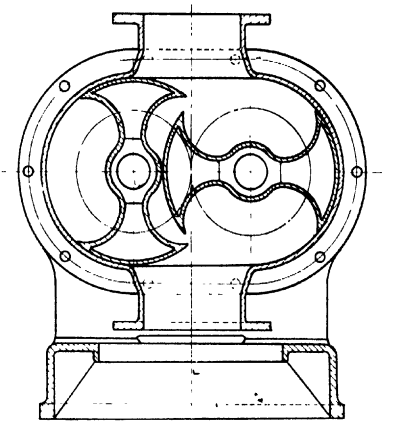

Fig. 318.—Section through modified Roots Blower.

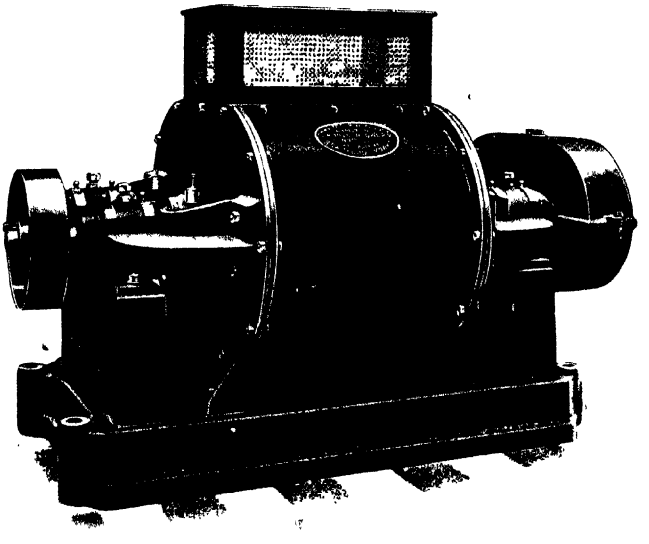

Fig. 319.—Belt-driven Roots Blower (Thwaites Bros.).

With the object of obtaining higher pressures (up to 5 lbs. per sq. inch) Messrs. Thwaites Bros. design a high speed blower (up to about 1000 R.P.M. maximum) in which the rotors are shaped as shown in fig. 318. Due to the extended length

of the running joint, a small amount of the high pressure air is carried forward to the suction side, in the small space between the rotors themselves.

Fig. 319 is a photograph of a belt-driven air blower, while fig. 320 shows a larger blower direct coupled to a steam engine, the steam from which is generally exhausted into the gas producers. These blowers may be used for handling gas, in which case inlet and outlet branches are provided for the gas piping.

Fig. 321 shows an example of a gas exhauster of the eccentric drum type. The drum B has its lowest tangent in common with the lowest tangent of the

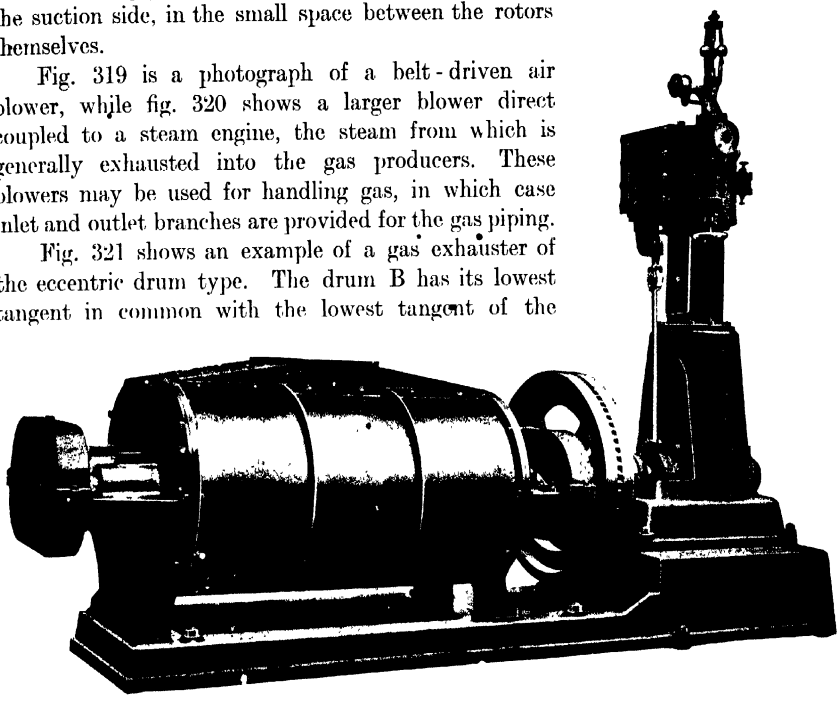

Fig. 320.—Roots Blower with direct Steam Engine Drive (Samuelson).

inside of the blower casing A. A sliding vane C passes right through the drum; this vane consists of two parts, the ends of each of which are provided with nose strips or packing pieces (*a*), which fit into a guiding slot provided in the two end plates of the casing A. When B revolves the sliding vane is moved diametrically across the drum, thus enabling the gas in the crescent-shaped space between A and B to be swept forward twice per revolution.

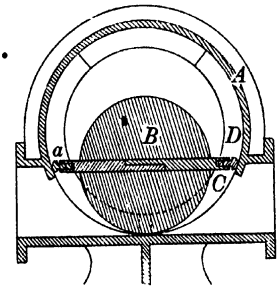

Fig. 321.—Drum Type Rotary Gas Blower.

It is not necessary to have a diametral sliding vane (which constitutes two vanes), but several radial vanes, each moving in its own slot in the drum B, may be provided.

Fig. 322 shows a series of constant speed curves of a Roots blower, which indicate in a typical way the relation between the volume carried forward at various pressures. It will be clear that the higher the speed, the greater will be the quantity passed against a given pressure.

Fig. 323 shows the actual test result obtained on a Roots blower designed to supply air to a gas producer plant at the rate of 400 to 500 cub. ft. per minute. In

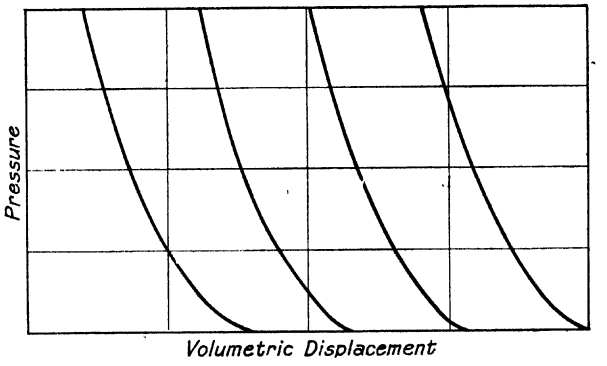

FIG. 322.—PRESSURE-VOLUME CURVES TYPICAL OF A ROOTS BLOWER.

this case the number of revolutions is plotted as ordinate, while the air volume discharged is plotted as abscissae; three curves are drawn representing three different pressure conditions.

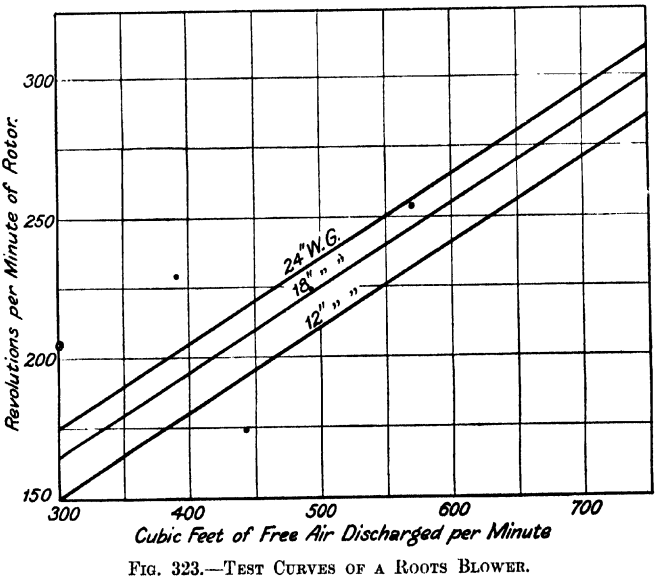

FIG. 323.—TEST CURVES OF A ROOTS BLOWER.

When comparing the curves in figs. 322 and 323 with those in figs. 315 and 316 for blowers or fans of the centrifugal type, we obtain an excellent picture of the manner in which each type of machine will respond to varying conditions of gas producer plant operation.

Assuming either machine to run at a *constant speed*, then we may say that within reasonable limits the *centrifugal type machine* will produce a *constant pressure* difference independent of the gas volume passed, while the *rotary blower* will supply a *constant volume* independent of the pressure difference required.

Supposing that the resistance of the gas plant suddenly increases without any demand for a larger gas quantity, then the rotary blower will, if running at constant speed, still deliver the same quantity of air or gas, but its pressure will increase, and consequently also its power consumption. In other words, the rotary blower will automatically respond to pressure obstructions, for which reason it is also called a positive blower.

Under similar alterations in operating conditions the centrifugal fan will deliver less air or gas until the resistance in the plant caused by the flow of such smaller quantity of air or gas corresponds to the pressure difference created by the fan. With an increase in plant resistance the centrifugal fan will, therefore, require less power.

(4) PRESSURE AND VOLUME REGULATION

The volume of gas passed through the producer gas plant, and the pressure loss caused by the flow, are two factors which are entirely interdependent (so long as the condition of every part of the plant in regard to causing pressure obstructions is the same), and will stand in such definite relation to one another as can be determined by the common laws applying to the motion of fluids.

The resistance offered to the gas flow is, however, also dependent upon the state of the plant, say whether the fuel bed is dense or hollow, whether dust and tar deposits have been allowed to accumulate at certain places, whether the gas or air valve positions have been altered, etc., etc.

For practically all installations it is required that the gas leaving the plant shall be maintained at a constant pressure whatever be the resistance of the plant or the load conditions. This is especially important in cases where the gas is used in furnaces, since the amount of excess air in the flue gas can be lower if the pressure of the gas supply is constant.

A constant pressure at the outlet of the plant can be maintained in different ways, the best method depending entirely upon the type of plant and the machine which is used for causing the gas flow.

The behaviour of the various machines used for causing gas flow under altering pressure and volume conditions has already been described, but so far as the plant type is concerned it may be said that the means used for pressure regulation will alter with the total pressure loss in the plant at full load and the pressure at which the gas is distributed for use. Assume for illustration the case of a bituminous by-product producer gas plant in which the total pressure loss may be 30″ as compared with an anthracite gas producer plant, in which the pressure loss may be only 2″. If the gas is to be supplied at a pressure of 8″ W.G., then the total initial pressure is

38″ and 10″ respectively. If now suddenly the demand for gas is decreased from full load to, say, half load, then the resistance offered to the flow will be reduced in the one case from 30″ to, say, 8″, and in the other from 2″ to, say, $\frac{1}{2}$″, so that if the 8″ outlet pressure is to be maintained, the initial pressure will have to be reduced from 38″ to 16″ in the first case against 10″ to $8\frac{1}{2}$″ in the latter case.

If a centrifugal fan without any regulating means were employed in the anthracite plant as the gas flow machine, the effect of the load reduction would be that the gas would be supplied at a pressure of $9\frac{1}{2}$″ against 8″ at full load, viz. a pressure variation which would not be of any serious consequence in many industrial applications of the gas. On the other hand, if a positive blower were employed, the outlet pressure would rise to an extent which would seriously affect the utilization efficiency of the gas.

The maintenance of a practically constant outlet pressure can be achieved in some of the following ways :—

(*a*) Gas storage holder.
(*b*) By speed regulation of the gas flow machine.
(*c*) By throttling the gas or air current (mainly for centrifugal fans).
(*d*) By returning or by-passing either the gas or air from the machine (mainly for positive rotary blowers).

(*a*) The installation of a gas storage holder in which the excess gas made during low load periods is stored until the operating conditions of the plant are altered (adjusting gas valves or modifying machine speeds) by the operator, may be considered as the simplest, but also the most expensive procedure. Whereas in lighting gas works this is a common practice, the gas volume to be handled in a producer gas plant is so very much larger for the same number of heat units stored that the first costs become prohibitive. Furthermore, in nearly all gas producer plants the gas is consumed at the place of manufacture, so that the producer and the consumer of gas can work hand in hand. Since a practically constant pressure can be maintained by other means, there are now no modern gas producer plants installed with gas storage holders. Practically all cases of pressure regulating means consist in part of a small gas "holder" (say of a few feet diameter). The position of the bell of this "holder" above the water line is governed by the gas outlet pressure from the plant and allowed directly to affect the particular regulating device.

(*b*) An alteration in the speed of a centrifugal fan will affect its pressure difference, while an alteration in the speed of a positive blower will affect the volume delivered and automatically adjust the pressure against which this altered volume is to be delivered in accordance with the conditions existing. In all cases where the fan or blower has an independent drive, be it an electro motor or a steam engine or turbine, a speed regulation is easily obtained in the first case (for direct current) by installing the motor with speed-regulating devices of usual type, and in the second case by supplying a special steam throttling valve whereby the pressure and quantity of the steam supplied can be controlled. In case of the electrical

control the gas pressure governor in rising or falling will vary the resistance of the motor field, and therefore vary the speed, while in the case of the steam throttling valve the pressure governor may move the valve directly by the aid of levers or indirectly by controlling, say, the amount of hydraulic pressure water admitted to the throttle valve.

In designing governors and controlling devices of this type care must be taken

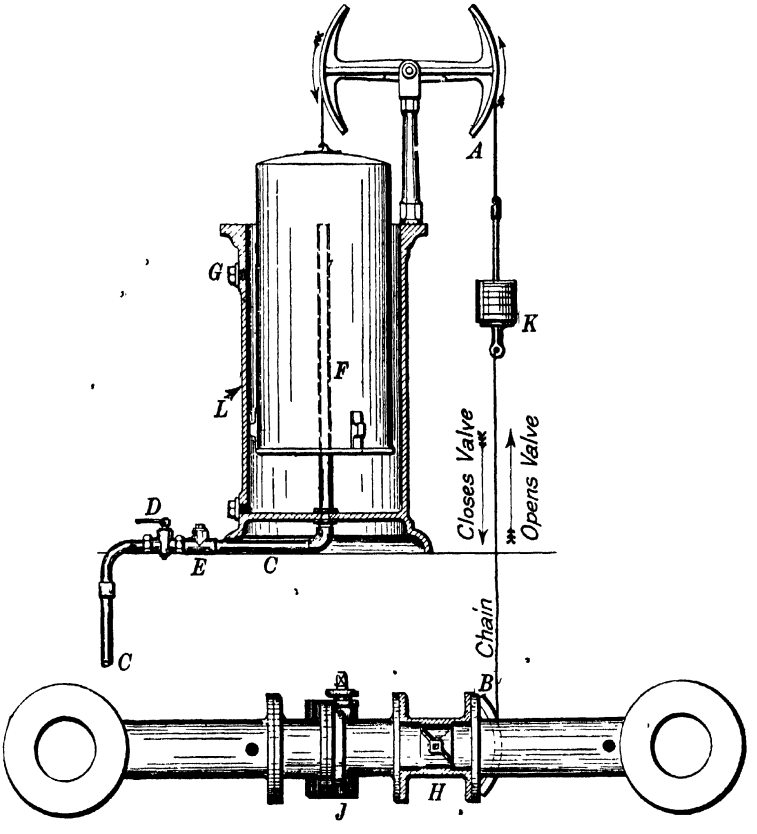

FIG. 324.—PRESSURE GOVERNOR FOR CENTRIFUGAL FANS.

that a smooth and very even movement of the governor or the controlling device is obtained, otherwise "hunting" (pressure oscillations) may take place. Sometimes this difficulty may be minimized by providing the governor bell with an external water cup, so that the gas pressure required to move the bell from its bottom to its top position is increased, or the movement of the bell may be retarded by arranging for an air cushion above the governor bell.

(*c*) Fig. 324 shows a Bryan-Donkin pressure governor and gas throttling valve

such as would operate satisfactorily in connection with a centrifugal fan running at constant speed.

C is a branch pipe taken from wherever on the plant it is desired to control the pressure, and F is the governor bell suspended by a chain into a water tank L and balanced by weights K. From the tail end of the balance weights another chain is arranged to operate a quadrant B, which is keyed on to the shaft of the butterfly or throttle valve H, which is fixed in the gas supply main from the plant, or the air supply main to the plant, depending upon whether the fan deals with air or gas.

If the demand for gas is suddenly decreased, the result will be that the pressure at which the gas is delivered will increase, *i.e.* the pressure in the pipe C will increase and at once cause the bell F to rise, which in its turn will cause the flap H to close more, whereby the loss in plant resistance (due to load reduction) is counterbalanced, and the delivery pressure maintained constant. The loss in power occasioned by throttling the gas is represented by the pressure loss in the flap valve, which often is only a small part of the total pressure difference created by the fan.

(*d*) A positive blower running at constant speed always passes the same gas volume. The pressure regulating means used for positive blowers are, therefore, based upon by-passing any excess volume.

When the blower is arranged to supply air, the excess air is allowed to escape to the atmosphere, say through a butterfly valve such as shown in fig. 324. In this case, however, the flap is to be fully open when the pressure in the governor bell is highest.

When the blower is arranged to handle gas, it is clear that the excess cannot be blown to waste. For this reason a by-pass main with the necessary valves is provided between the suction and pressure pipes, and excess gas is returned from the pressure side of the blower to the suction side through this main. If the butterfly valve H, shown in fig. 324, be fitted in a by-pass main, this arrangement would be quite suitable for the purpose.

Fig. 325 shows a compact design of by-pass valve designed by Messrs. Pintsch. As soon as the gas pressure on the pressure side E exceeds the desirable maximum pressure, the governor bell C will cause the valve B to be lifted off its two seats and the excess gas escapes to the low pressure side A.

When higher gas pressures are used and water is unsuitable for the governor bell, a leather or thin plate diaphragm type of governor may be used (see H, fig. 288) to operate the by-pass or escape valve.

Concerning the power expended due to the by-pass or escape system of pressure control for positive blowers in comparison with the throttle control for fan type blowers, we may say that, as a rule, less power is consumed in the latter system than in the former.

The load fluctuations existing on many producer gas plants are so regular that the operator by hand operation is able to adjust either valves or machine speeds from time to time, thus preventing unnecessary power being expended in controlling the pressure.

On some of the larger cold gas producer plants both a positive and a fan type blower are simultaneously employed to cause the gas flow. In such cases each machine should be provided with its own type of control gear. For instance, where the air is supplied by a positive blower, and the fan blower is used for final gas washing purposes, the pressure governing system may be arranged so that the escape valve on the positive blower is regulated to maintain a constant pressure at some point of the plant previous to the fan inlet, while a throttle valve on the fan outlet is governed by the pressure in the gas delivery main to the works.

The above-described systems of pressure governing have referred to plants where cold and reasonably clean gas is manufactured, which would not prevent proper action of the governor bell. If hot crude gas is manufactured it is advisable to see that the gas in the governor bell is cold and clean, and this is best provided for if a gas storage chamber or receiver is inserted between the hot gas main and the governor. This receiver will serve as a gas "cushion," and also cause dust and tar to be settled out from the gas without contact with the governor.

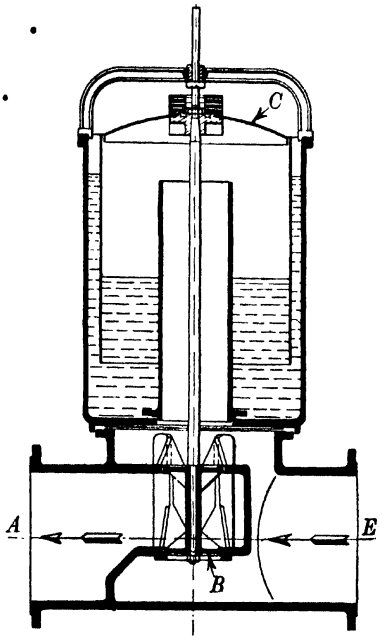

Fig. 325.—By-pass Governor for Positive Blower.

For plants where part of the gas is used for engines and part for heating purposes, it is often desirable to reduce the pulsating effect of the gas engines upon the gas pressure in the main pipe. The means provided for this purpose generally consist of a gas-receiving chamber into which gas is supplied from the plant at a regular rate of flow (say by means of a set control valve), and from which the engine may obtain its supply as required. Such devices are designated gas bags, anti-pulsators, expansion chambers, etc.

To enable the operator responsible for the gas supply from the producer plant from time to time to make adjustments of the machine speeds or valve positions, pressure indicators should be provided in positions easily observable and accessible by him. Such pressure indicators may be simple U-gauges made from bent glass tubing, connected up by, say, $\frac{1}{2}''$ steel pipes to the particular point of the plant where the pressure is to be indicated. On large producer plants several such gauges are assembled on one common pressure-indicating board, in which case it is possible to observe not only the delivery pressures but also the individual pressure losses in various sections of the plant.

(5) GAS PIPING AND GAS DISTRIBUTION

The pipes used for conveying the gas may be of cast iron or mild steel, sections of which are connected together with bolts, the joints being made with asbestos gaskets, red-leaded hemp, lead wool, or wire, etc., whichever is considered the most suitable.

The valves used for regulation or isolation may be similar to those employed on coke-oven or gasworks plants. When tarry gas is handled it is sometimes advisable to arrange for cleaning means, say a poke-hole, or drain-cock, or even a steam connection to enable valves "stuck" due to solidified tar to be freed by softening the tar.

All the lowest points of gas mains or pipes should be provided with drains, either of the syphon type or consisting of straight pipes luted in the foundations or in a special pot.

If the possibility of a reversion of gas flow in the piping exists, it should be provided against by the insertion of a water-sealed pipe, or a non-return flap valve, or weighted disc valve, which can only be kept open when the gas is under pressure. A backward flow in the gas plant would mean that the gas from the producer would be brought into the air mains, or grate spaces, and on reversion to proper conditions of flow the combustible mixture thus formed would be ignited by the fire and cause an explosion.

It is always advisable to provide some means to afford relief from the effects of accidental explosions, and for this reason the piping may be fitted with explosion doors, such as shown in fig. 255, or a blank flange may be made of a thin lead or rubber sheet, or an open pipe end may be sealed in a water pot, etc.

The average velocities existing in the piping between the various apparatus of cold gas producer plants known to the author have varied between 6 and 10 feet per second at full load; the lowest velocity was on a suction gas plant directly connected to a gas engine, and the highest on a large by-product producer gas plant, where a large pressure drop in the conduits and mains was allowable. The reason for the low average velocity on the suction gas plant is that the engine sucks the gas intermittently, thus causing a maximum gas velocity in the pipes twice or four times the average, depending on the engine type and design.

Whereas the matter of the sizes of piping used on the plant itself is entirely dependent upon the type of plant, the designing of mains for the distribution of gas to the various points of consumption is a more simple matter to deal with in a general way.

The relation between the various factors affecting the flow of gas through piping is clearly illustrated by *Dr. Pole's formula*, which has been commonly employed in connection with the design of *low pressure* towns' gas distributing systems. This formula may be written

$$Q = 22{\cdot}5\sqrt{\frac{hd^5}{SL}},$$

in which

Q denotes the gas flow in cubic feet per minute.
h ,, ,, gas pressure loss in inches W.G.
d ,, ,, diameter of the pipe in inches.
S ,, ,, specific gravity of the gas (basis air = 1 at N.T.P.).
L ,, ,, length of pipe in yards (*i.e.* equivalent length).

To enable a quick judgement to be made as to the quantity of low pressur producer gas that can be conveyed at varying pressure losses in pipes the curve in figs. 326-328 have been drawn to cover pipe sizes from 1″ to 36″ in diameter. I explanation of the use of these curves the following may be mentioned :—

Each curve shows the relation between the gas quantity passed in cub. ft. pe minute (as ordinate), Q and the pressure loss in inches W.G. (as abscissae), h for given pipe diameter.

The specific gravity of the producer gas S has been assumed equal to 0·78 i reference to air (at N.T.P.). If the curves are employed for gases of differen specific gravity, then it should be remembered that the quantity passed varie inversely as $\sqrt{S}$, or, in other words, for a given pressure drop the quantity obtaine from the curves should be corrected by multiplying by the factor $\sqrt{\frac{0{\cdot}78}{S}}$. Similarl the pressure loss for passing a given quantity should be corrected by multiplyin with the factor $\frac{S}{0{\cdot}78}$.

The equivalent length of piping L (that is, the total straight length of pipes + a addition for resistance of special fittings such as bends, tees, valves, etc.) has bee taken as 100 yards. For different lengths of piping corrections should be made a follows : If the pressure loss be given, then the quantity obtained from the curve should be corrected by multiplying by the factor $\sqrt{\frac{100}{L}}$. If the gas quantity b given, the pressure loss obtained from the curves should be corrected by multiplyin by the factor $\frac{L}{100}$.

Table 72 contains figures on the same subject as the curves, except that th volume carried is given for varying pipe lengths and constant pressure loss.

The addition to be made to the straight length of piping to allow for the resistanc of specials is often a very arbitrary one. Table 73 (page 454)[1] has recently bee published in connection with steam flow charts, and may be made use of in co nection with producer gas piping.

An example may serve to illustrate the above. Let us assume that 200 cub. f of producer gas per minute is to be carried through a 5″ pipe 150 ft. long and co taining one side outlet tee, one gate valve, and three standard elbows, and we desi to know the pressure loss.

[1] Dean E. Foster, A.S.M.E., December 1921.

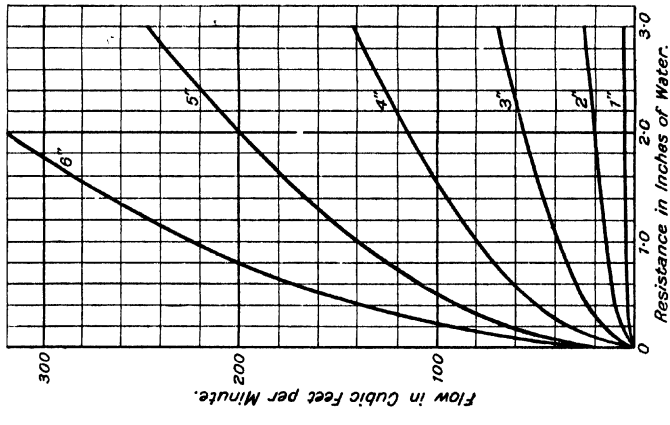

FIG. 326.—GAS FLOW CURVES FOR PIPES 1" TO 6" DIAMETER.

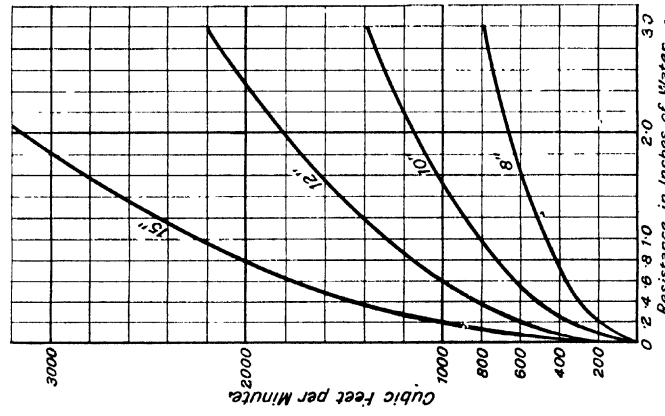

FIG. 327.—GAS FLOW CURVES FOR PIPES 8" TO 15" DIAMETER

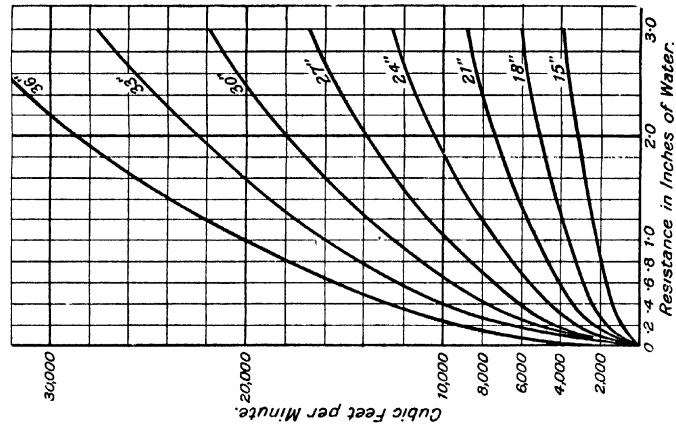

FIG. 328.—GAS FLOW CURVES FOR PIPES 15" TO 36" DIAMETER.

Table 72

Capacity of Producer Gas Mains in cub. ft. per Minute

Pressure loss = 1″ W.G. Specific gravity of gas = 0·78.

For other pressure losses multiply by $\sqrt{P}$. For other specific gravity multiply by $\sqrt{\frac{\cdot 78}{S}}$.

Length of Pipe in Yards.	Diameter of Pipe in Inches.														
	1″	1½″	2″	2½″	3″	3½″	4″	5″	6″	7″	8″	9″	10″	11″	12″
10	8·06	22·2	45·6	79·6	125·7	174·8	258	451	711	1046	1460	1959	2550	3236	4023
20	5·7	15·7	32·25	56·3	88·8	130·7	182	319	503	739	1032	1386	1803	2289	2844
30	4·6	12·8	26·3	46	72·5	106·7	149	260	411	604	843	1141	1472	1868	2322
40	4·03	11·1	22·8	39·8	62·8	92·4	129	225	356	523	730	979	1275	1618	2011
50	3·60	9·9	20·4	35·6	56·7	82·6	115	202	318	468	653	876	1140	1447	1799
60	3·3	9·1	18·6	32·5	51·3	75·4	105	184	290	427	596	800	1041	1321	1643
80	2·85	7·8	16·13	28·1	44·4	65·3	91·2	182	251	370	516	693	902	1144	1122
100	2·55	7·0	14·4	25·2	39·7	58·4	81·6	143	225	331	462	620	806	1023	1272
125	..	..	12·9	22·5	35·5	52·3	73·0	128	201	296	413	554	721	916	1139
150	..	..	11·8	20·5	32·4	47·7	66·6	116	184	270	377	506	658	835	1039
175	..	..	10·9	19·0	30·0	44·1	61·7	108	170	250	349	468	609	773	961
200	..	..	10·2	17·8	28·1	41·3	57·7	100	159	234	326	438	570	724	900
250	..	..	9·1	15·9	25·1	37·00	51·6	90·1	142	209	292	392	510	647	804
300	..	..	8·3	14·5	23	33·75	47·1	82·3	130	191	267	358	466	591	734
350	..	..	7·7	13·5	21·2	31·2	43·6	76·2	120	177	247	331	431	547	680
400	.	..	7·2	12·6	19·8	29·2	40·8	71·3	112	165	231	310	403	512	636
450	..	..	5·4	11·9	18·7	27·5	38·5	67·2	106	156	218	292	380	482	600
500	..	..	..	..	..	..	36·5	63·7	100	148	206·5	277	361	458	569

Length of Pipe in Yards.	Diameter of Pipe in Inches.													
	15″	18″	21″	24″	27″	30″	33″	36″	42″	48″	54″	60″	66″	72″
10	7028	11090	16290	22750	30550	39750	50440	62700	92150	128600	172800	224900	285300	354600
20	4969	7839	11520	16090	21600	28100	35670	44340	65160	90990	122200	159100	201800	250800
30	4057	6400	9406	13130	17640	22950	29120	36200	53200	74290	99740	129800	164700	204700
40	3663	5544	8147	11380	15280	19870	25230	31350	46080	64340	86400	112500	142700	177300
50	3275	4958	7286	10170	13670	17770	22560	28040	41210	57540	77270	100600	127600	158600
60	2990	4527	6653	9290	12470	16230	20600	25610	37620	52540	70550	91830	116500	144800
80	2590	3920	5761	8044	10800	14060	17830	22170	32580	45500	61090	79520	100900	125400
100	2222	3505	5152	7194	9661	12570	15950	19830	29140	40690	54640	71120	90220	112100
125	2072	3137	4610	6437	8644	11250	14280	17740	26070	36410	48890	63630	80720	100300
150	1891	2863	4207	5873	7886	10260	13020	16190	23790	33220	44610	58060	73650	91560
175	1751	2650	3894	5438	7302	9499	12060	14980	22030	30750	41300	53750	68190	84760
200	1639	2479	3644	5089	6832	8890	11280	14030	20610	28780	38650	50300	63810	79320
250	1406	2217	3334	4550	6109	7949	10090	12540	18430	25740	34550	44980	57060	70920
300	1283	2024	2975	4155	5578	7257	9210	11450	16830	23500	31550	41070	52100	64760
350	1188	1874	2754	3846	5164	6719	8527	10600	15580	21750	29200	38020	48220	59950
400	1111	1753	2576	3597	4831	6285	7977	9915	14570	20340	27320	35560	45110	56080
450	1048	1653	2430	3392	4555	5927	7521	9350	13740	19190	25760	33540	42540	52880
500	994	1568	2304	3218	4320	5620	7134	8867	13030	18200	24430	31810	40340	50160

TABLE 73

EQUIVALENT PIPE LENGTHS IN FEET TO ALLOW FOR RESISTANCES IN VARIOUS FITTINGS FOR CONDUITS CARRYING GAS OR VAPOUR

Formula used : $L_e = 43{\cdot}7\ rd^{1.2}$.

Nominal Pipe Size, Inches.	Actual Internal Diameter, Inches.	Gate Valve.	Long Radius Elbow or Tee.	Medium Sweep Elbow or Tee reduced in size ¼.	Standard Elbow or Tee reduced in size ½	Angle Valve.	Close Return Bend.	Tee through Side Outlet.	Globe Valve.
Factor of Resistance.		**0·25**	**0·33**	**0·42**	**0.67**	**0·90**	**1·00**	**1·33**	**2·00**
½	·622	·31	·41	·52	·84	1·12	1·25	1·66	2·5
¾	·824	·44	·57	·73	1·17	1·57	1·75	2·33	3·5
1	1·049	·57	·77	·98	1·57	2·11	2·34	3·11	4·68
1¼	1·380	·82	1·07	1·37	2·19	2·94	3·27	4·35	6·54
1½	1·610	·98	1·29	1·64	2·63	3·52	3·92	5·21	7·84
2	2·067	1·32	1·74	2·23	3·55	4·77	5·30	7·05	10·6
2½	2·469	1·64	2·16	2·75	4·39	5·91	6·56	8·71	13·12
3	3·068	2·13	2·81	3·59	5·72	7·69	8·54	11·40	17·08
4	4·026	2·96	3·90	4·97	7·94	10·65	11·84	15·75	23·68
5	5·047	3·88	5·11	6·42	10·40	13·95	15·51	20·60	31·02
6	6·068	4·81	6·35	8·09	12·90	17·35	19·27	25·60	38·54
7	7·023	5·75	7·59	9·66	15·40	20·7	23·02	30·6	46·08
8	7·981	6·70	8·85	11·20	17·90	24·1	26·80	35·6	53·6
10	10·02	8·75	11·54	14·70	23·40	31·5	35·0	46·6	70·0
12	12·09	10·90	14·40	18·35	29·30	39·3	43·7	58·1	87·4

From fig. 326 we find that the pressure loss for 100 yards equivalent length $= 2''$ W.G.

The equivalent length in this case is :—

150 ft. of straight piping	=	150 ft.
1 side outlet tee .	=	20·60 ft.
1 gate valve . .	=	3·88 ,,
3 elbows at 5·11 . .	=	15·33 ,,
		189·81 ft.
		or = 63·27 yards.

The pressure loss is therefore

$$h = 2 \times \frac{63{\cdot}27}{100} = 1{\cdot}265'' \text{ W.G.}$$

When designing a series of low pressure producer gas distribution pipes for a particular works the best procedure will be to first determine the gas consumption and delivery pressures required at each particular engine or furnace (giving due consideration to possible extensions), and then calculate the required initial gas delivery pressures at the producer gas plant for two or three alternative arrangements and sizes of gas distribution pipes. The decision as to the most economical procedure then simply becomes a question of comparison between the extra power costs of the producer gas plant, due to increased delivery pressure, and the saving

in depreciation and interest charges upon the first costs involved through installing smaller pipe lines.

When the producer gas is delivered to a system where *high pressure losses* exist the above formula no longer applies, because the volume and specific gravity of the gas alter continuously as the gas passes forward. According to H. A. Humphrey[1] the most correct formula which takes care of the alterations attendant upon high pressure distribution is that of Dr. W. C. Unwin for isothermal flow :—

$$u_1 = \sqrt{\frac{gcT(P_1^2 - P_2^2)}{P_1^2\left(\zeta\frac{L}{m} + \log_e \frac{P_1}{P_2}\right)}},$$

where u_1 denotes initial velocity of gas in pipe, in feet per second.
P_1 ,, initial absolute pressure, in pounds per square foot.
P_2 ,, final absolute pressure, in pounds per square foot.
T ,, absolute temperature, in degrees F. ($461° + t°$ F.).
L ,, length of transmission, in feet.
V ,, volume in cubic feet of 1 lb. of gas.
c ,, constant in $PV = cT$.
m ,, hydraulic mean radius $= \frac{d}{4}$ for circular pipes.
g ,, acceleration due to gravity $= 32{\cdot}2$.
d ,, diameter of pipe in feet.
ζ ,, coefficient of friction $= 0{\cdot}0027\left(1 + \frac{3}{10d}\right)$.

Where L is great, then $\log_e \frac{P_1}{P_2}$ is comparatively small and may be neglected. The formula then reduces to—

$$u_1 = \sqrt{\frac{gcTm}{\zeta L} \times \frac{P_1^2 - P_2^2}{P_1^2}}.$$

On the basis of distribution of Mond gas at 60° F. and of the following composition :—

			Specific Gravity.	
			Reference Air at N.T.P.	Lbs. per 1000 cub. ft.
CO_2	16 per cent	Dry gas at 0° C.	..	63·66
CO	11 ,,	Dry gas at 60° F.	..	60·34
CH_4	2 ,,			
H_2	29 ,,			
N_2	42 ,,			

[1] "Generation and Distribution of Producer Gas in South Staffordshire," *Proc. Inst. Civil Engineers*, December 10, 1912.

Mr. Humphrey, in accordance with Unwin's formula, has calculated the results shown in Table 74. The table is divided into a left and a right section. The left section contains the gas quantity to be passed through the system, as well as its initial pressure, while the right section indicates the distance in miles at which the gas can be delivered in various sizes of mains if the final pressure is 1 lb./sq. inch above atmospheric (*i.e.* 15·7 lbs. absolute).

Dr. Unwin's formula (and consequently the figures in the table) assumes straight tubes with smooth surfaces and constant gas temperature, which conditions are not obtained in practice. With a view to finding how far the practical coefficient of friction (that is, including losses in specials, valves, etc.) differed from the one assumed by calculation, Mr. Humphrey carried out tests with air over a pipe system over 10,000 yards in total length (see original paper). The average of 10 tests over one section showed that the actual coefficient of friction was 37·6 per cent larger than the theoretical, which fact should be borne in mind when making use of the results in table (this particular figure corresponding to a reduction to 72·7 per cent of the stated distribution distance in miles).

PART III

WOI KING PRODUCER GAS PLANTS

THE operator of a producer gas plant is mainly concerned with the control of the process of gasification : testing the plant and its products : the principles of operation : and the cost of running the plant. We shall, therefore, subdivide this section into two chapters, viz. :

CHAPTER VII.—CONTROL TESTING AND ANALYSIS.

,, VIII.—OPERATING PRINCIPLES AND WORKING COSTS.

CHAPTER VII

CONTROL TESTING AND ANALYSIS ON GAS PRODUCER PLANTS

EXCEPT for a few general remarks we shall not concern ourselves in this chapter with the various analytical methods which may be employed for carrying out the testing required. Such methods may be found by reference to most chemical text-books on industrial testing, whereas our object is to emphasize such points regarding control testing as are of specific importance to the user of a gas producer plant.

Of the various chemical control tests referred to in the following only a few need be used in the daily routine work, and for small plants of simple design such tests may only be needed a few times a month or year. To cover the whole subject it has been necessary to refer to many tests which are needed only in exceptional cases.

The tests may be subdivided into :—

(1) Fuel examination and analysis.
(2) Gas analysis and tests.
(3) Special tests on by-product plants.
(4) Gas metering.

It is still customary on plants when carrying out demonstration tests to make a so-called "carbon balance." In accordance with the author's experience the results obtained by doing such a test are less reliable than those obtained by carrying out a thermal balance on the lines of Chapter III. (*B*). where the unit volume of the cold gas at N.T.P. is the standard basis.

A carbon balance determination is sometimes, and was formerly exclusively, employed in cases where the gas volume cannot be accurately measured. It involves the determination of the total carbon in the coal as charged into the producer, and the carbon retained in the plant, as dust and tar, and in the ash, the difference between the two quantities being assumed to be existing in the gas, the volume of which is calculated from the weight of carbon contained per unit volume of gas. The thermal efficiency was then determined from the ratio between the heat in the gas volume thus found and the heat in the corresponding quantity of coal.

(1) FUEL EXAMINATION AND ANALYSIS

Having once chosen a suitable fuel for use in the plant, occasional tests for grading, heating value, ash, and moisture contents in representative fuel samples are sufficient as a control on the fuel merchants.

One of the most difficult tasks is to obtain from a large bulk a small sample which is a true representative of the average. Whoever undertakes this task should be made fully aware of the importance of the work.

Having once obtained a sample, which should be a large multiple of that actually subjected to chemical tests, it should be graded over a series of screens, the result being given, say :—

Size of largest pieces . . .	$= a'' \times b'' \times c''$.
Percentage remaining on 1″ sq. screen	$= m$
,, between 1″ and $\frac{1}{2}$″ ,,	$= n$
,, ,, $\frac{1}{2}$″ and $\frac{1}{4}$″ ,,	$= o$
,, passing $\frac{1}{4}$″ sq. screen	$= p$

The sample used for laboratory examination should be made up from proportionate quantities of the various gradings crushed to a suitable size and well mixed previous to the test sample being taken therefrom.

When examining the fuel in the laboratory, one should distinguish between the methods required for fuels which are low in volatile matter and for those which are not. For the former a proximate analysis stating

Moisture content in percentage,
Volatile matter in percentage on the dried substance,
Fixed carbon ,, ,, ,,
Ash ,, ,, ,,
Heating value ,, ,, ,,

should be quite satisfactory in cases where no special considerations have to be taken account of.

It is advisable to test all bituminous fuels over an open Bunsen flame. A piece of coal about 1″ cube is placed over a Bunsen burner and slowly heated up, the behaviour of the coal during heating being observed and the total amount of swelling of the sample piece calculated.

For fuels containing more than, say, 15 per cent volatile matter (on the ash- and moisture-free basis) it is always advisable to subject the sample to a distillation test as well as the ordinary complete analysis, so that a guide as to the tar-yielding qualities of the fuel may be obtained.

A suitable method for determining the tar yield is that generally employed in the shale oil industry, or, say, that published by the Fuel Research Board in their Technical Paper No. 1.

To avoid the extreme accuracy required by testing small fuel samples the author

prefers to distil about 2 kilogrammes of fuel at one time, the testing plant employed being after the type of a miniature gasworks. The results obtained by a test with such a large sample will also give a guide as to other points useful to the producer gas engineer. Whatever testing apparatus be employed, it is recommended for the sake of comparison always to use the same procedure and the same shape of retort.

Fig. 329 shows a diagram of the testing set employed by the author;[1] it consists of such parts and apparatus as can be made up and put together in a small industrial laboratory.

A is a hematite iron retort of about 350 cub. in. capacity; B is a protection plate to avoid "scorching" of fuel; C the pyrometer to assist control of the progress of distillation; D, the gas-fired furnace; E, the first condensing pot with superimposed reflux type air condenser; F, the second condensing pot with superimposed downflow water condenser; G, H, I, and J are catch bottles containing water, sulphuric acid, heavy petroleum, and pure cresylic acid, respectively; K indicates two drying towers containing charcoal and/or cotton wool; L is a gas meter, and M a gas-testing bottle. Instead of a gas meter and gas-testing bottle the total gas may be passed into a small storage holder.

The method of procedure when testing say a bituminous coal, is as follows:—

After grading the crude sample the whole is crushed, sampled for analysis, and 2 kg. of crushed pieces below $\frac{1}{4}''$ are placed in the retort, and the lid carrying the pyrometer sheath closed up tightly with the aid of permac or manganesite cement. All bottles are weighed previous to coupling up, and those containing liquids are filled to give a lutage of 10 to 20 mm. The gas for heating the retort

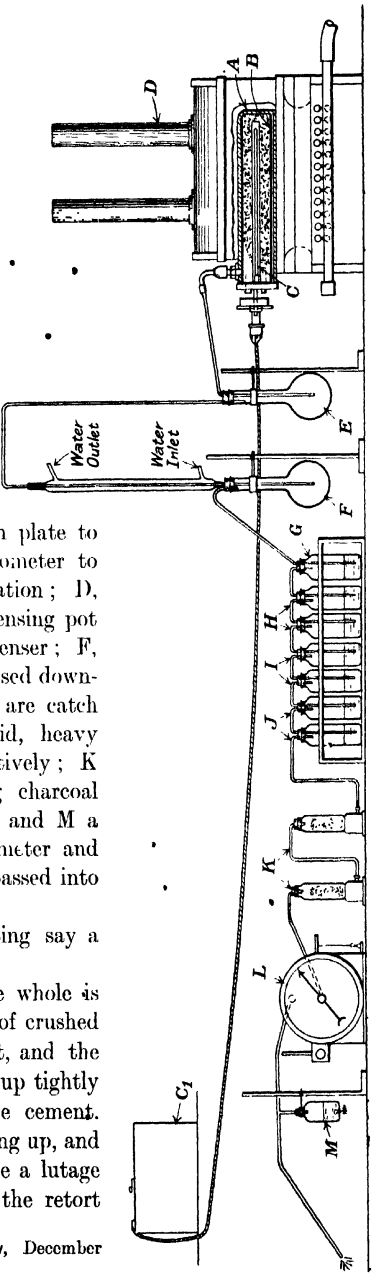

FIG. 329.—DISTILLATION TEST APPARATUS.

[1] *Journal of Society of Chemical Industry*, December 31, 1921.

is turned on, and the temperature is gradually increased until the evolution of tar and gas commences (generally 350°-400° C. for an English or Scotch bituminous fuel), and then adjusted to give a reasonably regular gas flow through the meter, while hourly continuous gas samples are taken. When a maximum temperature of 800° C. is reached in the retort, the heating is discontinued and the apparatus allowed to cool to atmospheric temperature. The whole heating period generally takes from four to six hours. The coke residue in the retort is weighed immediately it is removed, an average sample taken and quickly submitted for analysis to avoid air absorption. The remainder of the coke is preserved as indicating the comparative caking property of the coal. The hardness of the coke together with the result of the test of the fuel in the open flame will give a good idea as to the free burning properties of the fuel.

The various bottles are weighed and the increases in their respective weights noted, while the tar condensate from bottles E, F, G, and H is separated, dehydrated, and, if present in sufficient quantity, is fractionally distilled up to 350° C. The condensate thus separated is classified as "tar," while the increase in weight of bottles I, J, and K is classified as "volatile oils."

The amount of ammonia in the condensate and absorbed by the sulphuric acid is determined, this being the "volatile" ammonia.

The average gas composition is determined from the analysis of each separate gas sample, as well as from the rate of gas evolution during each particular sampling period.

Table 75 gives the results obtained by analysing and distilling twenty different fuels in this apparatus; while the way in which such results may be employed in regard to judging the probable gasification rate and efficiency, the yield of by-products, and heating value of the gas is explained in Chapter III. under the respective subheadings.

A weight balance and thermal balance of the products obtained have been made, from which it will be realized that, while the former is reasonably accurate, this is by no means the case in regard to the latter. There is a very high thermal loss in connection with the fuels high in volatile matter (see samples 12 to 20 inclusive). The only explanation for this discrepancy is that exothermal reactions take place within the fuel during distillation. It is likely that during heating there is set up an exchange of oxygen linkages with consequent exothermal reactions: say, two $=C=O$ links combine to give carbon (coke) and CO_2; similarly for $=C-O-H$ links. It should be clearly emphasized that this heat quantity will always be available during gasification in a producer, and, since fuels of high volatile content nearly always have a high moisture content, the heat set free will be available for evaporating moisture from the fresh fuel.

In connection with the *ash in the fuel* it is not always sufficient to know the amount of ash, but the nature of the same is important (pp. 117-127) to enable a proper judgement as to the clinkering tendency to be made. It is therefore often advisable to analyse the ash itself or obtain a fusing-point determination made on a standard or comparative basis.

The examination of the *ashes removed* from the producer for its content of carbon

should always be done on the dried sample, and the carbon content estimated by complete combustion with oxygen and absorption of the resulting CO_2. It is customary in some works to determine the content of carbon in the ash by the difference in weight before and after combustion, which method, in accordance with the author's experience, always gives a higher content of "carbon," probably due to a partial elimination of oxygen from some of the various oxides in the ash.

In sampling producer ashes, partly consisting of clinker and partly of "ash," due notice should be taken of the higher specific gravity of the clinker.

(2) GAS ANALYSIS AND TESTS

The most common test required is to determine the main gaseous components, such analysis enabling the gas-making condition of the producer to be judged. Other tests may be required from time to time, such as the determination of the calorific value, and the ammonia, tar, moisture, dust, sulphur, and chlorine content of the crude or final gas.

Whereas for the ordinary gas analysis it is satisfactory to withdraw a small quantity of gas and examine this particular volume, for the other tests it is necessary to pass larger quantities of gas through apparatus charged with special absorbents to retain the particular constituent it is desired to determine.

When a sample of gas for analysis is to be taken, a cork, with a piece of glass

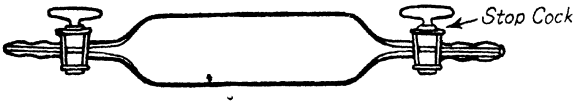

FIG. 330.—GAS SAMPLING TUBE.

tubing, to the outer end of which is attached a piece of rubber tubing closed with a clip or pinch cock, may be inserted into the main.

A gas sampling tube of glass, as per fig. 330, may conveniently be employed for this purpose; this tube should be completely filled with slightly acidulated water (to prevent absorption of CO_2) before it is attached to the rubber tube at the gas main. The sample of gas is sucked into the tube by letting nearly all the water run out. According to the rate at which the water is run out the gas sample will represent a "snap" or "average" test.

Ordinary Gas Analysis.—The principle of this consists in bringing the gas sample in successive contact with various absorbing reagents, each of which eliminates, or segregates, one of the constituents of the gas. Most of the testing apparatus used to-day are based partly or wholly upon Hempel's original method. The description of a producer gas testing set, as shown in fig. 331, and the procedure for such an analysis, will serve as an example of the principles involved.

Producer gas consists of the following main constituents :—

Carbonic acid	CO_2
,, oxide	CO
Hydrogen	H_2
Saturated hydrocarbons, generally designated methane	CH_4
Nitrogen	N_2

In addition to these it may also contain small quantities of

Unsaturated hydrocarbons	C_2H_4
Oxygen	O_2
Water vapour	H_2O

The *unsaturated hydrocarbons* of the series C_nH_{2n} are generally present in suc small quantities that their determination can nearly always be neglected. If separate determination should be desirable, fuming sulphuric acid should be use as an absorbing agent.

Oxygen is generally absent, but a test should invariably be made to prove it absence or otherwise.

Water vapour is present in all gas samples in a quantity depending upon th temperature of the sample as supplied to the testing set, since the gas will generall be saturated with moisture at this temperature.

If the various absorbing agents are capable of absorbing water vapour from the ga and do not give it up again, it may be retained in these; otherwise it will be eliminated a the same time as and proportionately to each absorbed constituent. There is no difficult in absorbing the moisture from the gas sample previous to testing in the ordinary wa but there is no assurance that the gas will not "pick up" moisture again from one c more of the absorbing agents. So far as the author's knowledge goes, no satisfactor method has yet been devised to eliminate possible errors due to moisture in the gas, an the principle of drying the sample between each measurement in the burette (which i this case must be charged with mercury instead of water) seems the only way in whic to eliminate the small errors caused by a varying moisture content of the sample.

Fig. 331 shows a portable producer gas testing set such as is employed by th Power Gas Corporation for general commercial tests. It consists of a calibrate burette A, which is connected to the levelling bottle B containing acidulated wate coloured by the addition of a suitable indicator. C, D, E, and E_1 are pipettes con taining the various gas-absorbing agents; they are filled with small pieces of glas tubing, so that a large reaction surface is obtained. F is an explosion pipette wit separate levelling bottle G and electric battery H, with induction coil and pus button. The burette A is interconnected with the various pipettes by capillar glass tubing, each pipette having a short rubber connection with a pinch cock. A three-way connection is provided at K, at which point the gas sampling tube i connected when analysis is to be carried out.

The procedure of the analysis is as follows:—After all the gas or air has bee completely swept out of the burette A and the five pipettes D, C, E, E_1, and F

through the connection at K, all pinch cocks are closed and the gas sampling tube connected up to K. By lowering the levelling bottle B, 100 c.c. of gas is sucked

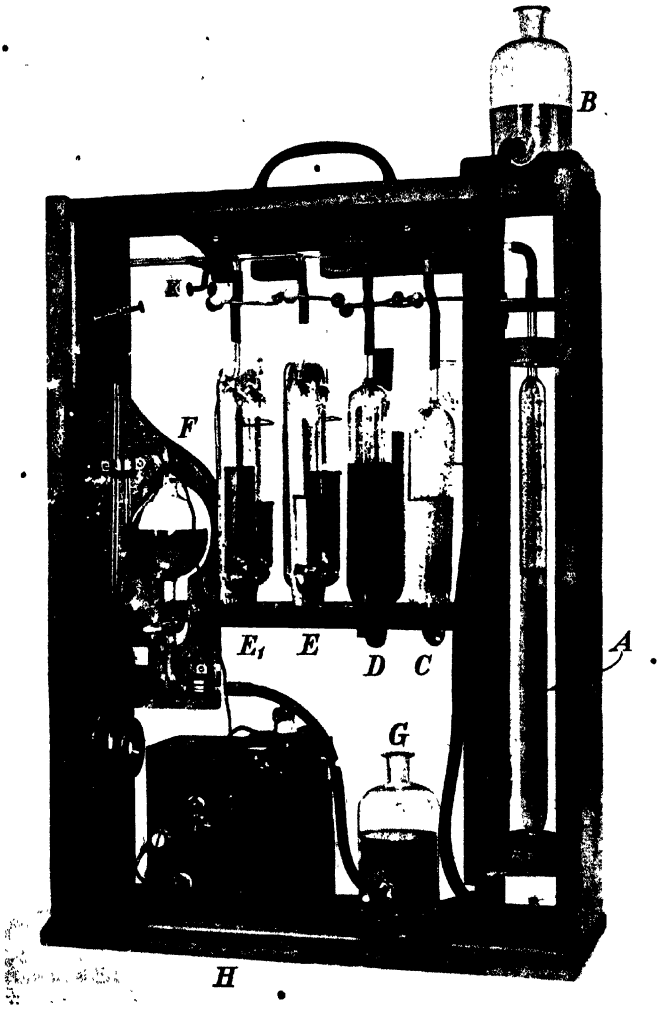

FIG. 331.—PORTABLE PRODUCER GAS ANALYSING SET.

into the burette, care being taken that the water levels in B and A are equal when the measurement is recorded.

The gas is now passed backwards and forwards between the burette A and the pipette C, filled with a solution of *caustic potash*, which serves as the *carbon dioxide*

absorption reagent. Complete absorption of CO_2 is effected in about one minute, when all the remaining gas is passed back into A, the pinch cock at top of C closed, and the gas contraction (*i.e.* the quantity of CO_2) recorded. It is advisable to repeat the absorption and consecutive measurement to ensure that complete removal of CO_2 has taken place.

A similar procedure is now carried out to treat the gas in pipette D, which contains *alkaline potassium pyrogallate*, which serves as the absorption agent for *oxygen*. Complete absorption is generally effected in three minutes.

The absorption of *carbon monoxide* is carried out in a similar way successively in the pipettes E and E_1, both of which contain a solution of *ammoniacal* or *acid cuprous chloride*. Unfortunately this reagent is not capable of absorbing large quantities of CO before it becomes spent, hence frequent renewal of the solution is necessary. With fresh solutions the CO absorption should be completed in about five to six minutes.

The determination of *hydrogen and methane* should not be effected by absorption but by combustion. For this reason a definite part (generally two-thirds) of the gas sample remaining after the removal of CO_2, O_2, and CO is ejected from the burette, while the remainder (one-third) is mixed with air or oxygen sucked in through K in suitable quantity to form a mixture which is easily exploded (a total volume of two and a half times the retained gas volume is generally ample if air is used). This combustible mixture is passed to the explosion pipette F and exploded by means of the spark from the induction coil. By the explosion the hydrogen is burnt to water vapour and the methane to CO_2 and water vapour. In other words, the volume of the products of combustion is decreased; this contraction is recorded by passing the products into the burette A, while the content of CO_2 is obtained by absorption in the pipette C and consecutive reading on the burette.

Since each volume of methane yields one volume of CO_2 upon combustion, the CO_2 content thus recorded is equivalent to the methane content in the gas quantity retained for explosion. (If this were one-third the gas volume remaining after CO_2, O_2, and CO absorption, the methane content of the original gas would be three times the gas contraction due to CO_2 absorption from the exploded mixture.)

On the basis of one-third the "remaining gas volume" having been used for explosion, the hydrogen content in the original gas is found by deducting twice the volume of the CO_2 formed by the explosion of the methane from the total contraction due to the explosion and multiplying the difference by two.

The combustion of methane and hydrogen and the gas volumes involved in the reaction may be expressed :—

$$\underset{(1\text{ vol.})+(2\text{ vols.})}{CH_4+2O_2} \longrightarrow \underset{(1\text{ vol.})\ (\text{Nil}).}{CO_2+2H_2O}$$

$$\underset{(2\text{ vols.})+(1\text{ vol.})}{2H_2+O_2} \longrightarrow \underset{(\text{Nil}).}{2H_2O}$$

One volume of methane forms two volumes of water vapour and one volume of CO_2 on combustion, and requires two volumes of oxygen, and since the water vapour condenses

out the contraction on combustion due to methane is twice the methane content. One volume of hydrogen requires half a volume of oxygen for combustion, and forms one volume of water vapour, which condenses out, consequently two-thirds of the contraction caused by burning the hydrogen is equal to the hydrogen content, and since the amount exploded contained one-third of the hydrogen in the original sample, twice the contraction due to burning the hydrogen is equal to the original hydrogen content. This statement is based upon the assumption that all the water vapour from the combustion is condensed out, which will not be the case if the air or gas, previous to combustion, were not saturated with moisture, or if the products of combustion have not the same temperature (when measured) as the original gas and air mixture. By water-jacketing the burette the latter error can always be eliminated.

The *difference* between the total content of the various gases as determined above and the original gas sample is recorded as the *nitrogen* content.

The *heating value* of the gas may be obtained by calculation from the gas analysis, but if a reliable gas calorimeter is available, a direct heating value determination should be made. Wherever the gas is likely to contain unsaturated hydrocarbons, or contain a high content of saturated hydrocarbons, generally recorded as "methane," the heating value determination by calorimeter is preferable. All large gas producer plant installations should be fitted with calorimeters where the gas heating value is automatically and continuously recorded on a chart. Several instrument makers supply continuous recording calorimeters, the main operating principle of these being that a constant quantity of gas is burnt under constant conditions, while the fluctuations in the heat quantity absorbed due to alterations in the gas heating value affect the position of the recording pen.

The testing of the gas for *special constituents* is carried out in two stages, the direct absorption on the plant itself and the subsequent examination of the used absorbent in the laboratory.

Fig. 332 shows a diagram of the apparatus generally required for this purpose. It consists of a connecting tube fitted sideways in the gas main at A, a series of washing or absorbing bottles B mounted on a wood frame, and the aspirator C.

The tube fitted into the gas main at A should extend at least 2″ to 3″ inside the gas main, and its open end should be bevelled at an angle of 45°, the inclined face placed so as to meet the flow of the gas.

To prevent any condensate, which may be formed in the tube, running back into the gas main, all connections and the tube itself should drain towards the absorbing bottles, which should be placed as close to the main as possible.

Where the crude gas is tested care should be taken that any glass tubes connected with indiarubber tubing have their ends close together, as the tar will destroy the rubber.

The bottles used vary in number and size, depending upon the test and quantity of gas or impurity to be removed, but 12 to 16 oz. bottles will generally be found suitable. The gas inlet tube should be luted at least 1″ in the washing liquids.

The aspirator should be carefully calibrated and a test made for tightness of the same and the various connections before the gas absorption is commenced.

If the pressure in the main should be sufficiently high it is possible to dispense

with the aspirator, in which case a gas meter should be inserted after the gas washing bottles, thus recording the volume passed. Whenever the gas may contain or pick up from the absorbing agents matters deleterious to the working of the meter, special precautions are to be taken.

The quantity of gas to be tested varies with the amount of the particular constituents present, but generally speaking it should not be less than 100 litres, and not more than 2000 litres, and its volume should always be corrected in reference to temperature and pressure.

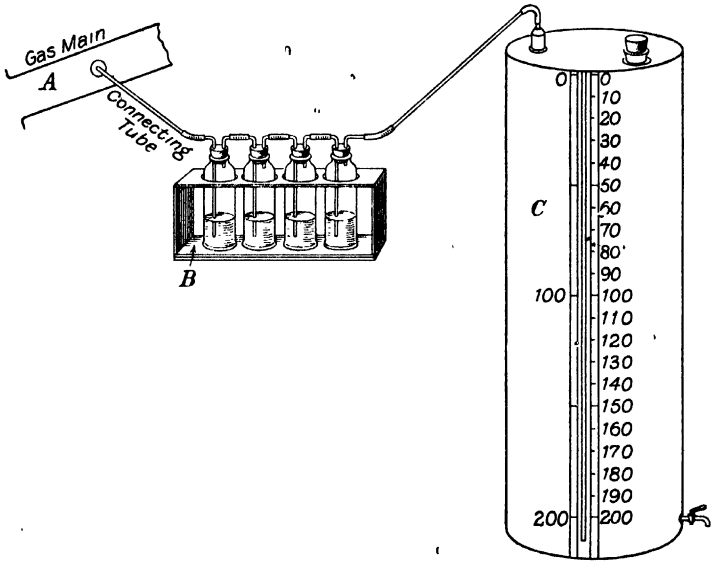

FIG. 332.—DIAGRAM OF GAS TESTING APPARATUS.

The following special observations may be made in regard to the estimation of the various constituents.

AMMONIA

Four bottles are used, out of which three are charged with a definite quantity of N sulphuric acid, diluted with water, the fourth being left empty to serve as a sulphuric acid spray catcher. By titrating the resulting liquor with N caustic soda the quantity of ammonia absorbed from the gas is obtained.

When more accurate testing is required the ammonia should be determined by the distillation method.

TAR

Two to four bottles are about half filled with glass beads, etc., which are covered with redistilled methylated spirits or alcohol. Between the last bottle and the gas

meter or aspirator is inserted a 12″ to 18″ long by $\frac{3}{4}$″ diameter glass tube packed with cotton wool, which serves as a tar filter and indicator of the completeness of the absorption. When the cotton wool becomes discoloured for more than half its length the absorption should be discontinued.

All parts of the apparatus are washed free from tar by alcohol or methylated spirits, and the total washings distilled until the tar and some moisture remain behind. The moisture is driven off by drying, and the tar determined by weighing.

A quick test to prove whether the gas is reasonably free from tar, as it should be, say, for gas engine use, is to let the gas from a $\frac{1}{2}$ inch hole impinge for one minute upon a piece of blotting-paper, held at a distance of 1 inch away from the hole. If the hole has been previously wiped clean the discoloration of the blotting-paper will form a rough guide as to the efficiency of the tar removal.

Moisture

In Air Blast.—One empty bottle followed by two bottles charged with concentrated sulphuric acid are carefully weighed. The moisture is determined by the increase in weight of the absorption bottles.

In Gas.—Three or four bottles are charged with heavy petroleum (say of B.Pt. =250° C.). The tar is absorbed by the petroleum, while the water condensed can be separated by distillation and weighed.

Sulphur

Three or four bottles are filled with bromine water followed by one or two bottles containing sodium carbonate (to remove completely any bromine absorbed by the gas before this reaches the meter).

The bromine causes all the sulphur compounds in the gas (practically all hydrogen sulphide) to be oxidized to sulphuric acid, which remains in solution and is afterwards determined as barium sulphate by precipitation with barium chloride.

Chlorine

Two bottles filled with water are followed by two bottles filled with a solution of caustic soda, which absorbs the CO_2 as well as the chlorine in the gas. The total chlorine in the resulting liquors is precipitated by silver nitrate in the usual way. Obviously a blank test for chlorine should be previously done on the caustic soda.

Dust

One or two bottles are charged with methylated spirits, while a cotton wool filter tube is inserted before the metering apparatus.

After passing gas through *very quickly* the tar retained is dissolved out of the cotton wool, by methylated spirits; all tubing and connections are also washed in

a similar way. All the various washings are added to the original methylated spirits charge, the whole filtered, and the precipitated dust weighed out.

If no tar is present in the gas the dust can be determined directly by filtration by glass wool, the wool and container being weighed before and after test.

It is usual to express the content of the various constituents in the gas in grammes per cub. m. gas (N.T.P.), or grains per 100 cub. ft. or ounces per 1000 cub. ft.

1 gramme per cub. m. = 43·7 grains per 100 cub. ft.
1 „ „ = 1 ounce per 1000 cub. ft.

(3) SPECIAL TESTS ON BY-PRODUCT PLANTS

In addition to the determination of the ammonia on the lines described above in the gas entering and leaving the absorbing plant, the ammonium sulphate circulating and storage liquors, the ammonium sulphate itself and the tar have to be examined from time to time.

Sulphate Liquors

Specific gravity determination by a Twaddell or Beaume hydrometer will give a rough idea as to the content of ammonium sulphate (see p. 410).

A more accurate method to obtain the *ammonia* (or sulphate) content is to add caustic soda in excess to a definite quantity of liquor and distil off the ammonia into a known quantity of N sulphuric acid, the excess of which is found by titration with N caustic soda.

Acidity is determined by direct titration with N caustic soda.

Ammonium Sulphate

Ammonia is determined by distilling a weighed quantity of the salt with caustic soda into a known quantity of N acid and titrating the excess.

Moisture content is determined by weighing a certain quantity of the salt before and after drying.

Free acid is determined by dissolving the salt in distilled water, subsequently titrating with N/10 caustic soda solution.

Tar

The *moisture* content should be determined by *slow* distillation of the crude tar, care being taken to *avoid bumping* and frothing, while any oil distilled over with the moisture should be returned to the dehydrated and cooled tar residue.

Specific gravity of dehydrated tar to be determined by hydrometer at 25° and

"*Free*" *carbon* is determined by extraction of the tar by benzene or other suitable solvent, and the *ash* by igniting the insoluble matter remaining.

A *distillation test* of a dehydrated sample should be made, the following fractions being recorded :—

0°-170° C.	$=a$	per cent.
170°-230° C.	$=b$	,,
230°-270° C.	$=c$	,,
270°-350° C.	$=d$	,,
Pitch residue	$=e$	,,
Loss	$=f$	,,

The quantity of *tar acids* may be determined on the dehydrated tar itself or separately on its various fractions by treatment with caustic soda solution and separating the tar acids from their soda salts by addition of sulphuric acid.

(4) GAS METERING

Measuring the whole quantity of gas made on a producer gas plant is very seldom resorted to on account of the first cost of the meters. Further, the necessity of accurate measurement of the gas is not nearly as essential as in the case of a town's gas works, since all the gas made in the producer gas plant is practically always consumed on the works itself. For accounting purposes the total quantity of fuel consumed is just as good a figure.

Metering of hot crude gas is impossible with any of the present types of gas meters, due to the difficulties caused by the moisture, dust, or tar contained in the gas, consequently meters can only be employed for cold gas.

Speaking generally, the use of gas meters on a producer gas plant is only justified where it is desired to know how to allot the total operating cost of the plant in proper relation to each one of several gas-consuming departments or where accurate testing is required.

Any of the known types of meters used for lighting gas can be used for producer gas so long as the usual specific gravity, etc., corrections are made. When bituminous producer gas is manufactured the tar sometimes interferes with the accuracy of meters of the anemometer (rotary meters) or of the displacement (wet [station] meter) type, and it is of advantage to arrange such meters to be by-passed for cleaning unless this can be done during shut-down periods. If meters of the Venturi or of the orifice type are installed, tar is not so likely to cause difficulties so long as the flow through the throat or disc is such that tar can be drained away.

If proper recording means are not installed with the meter it is always necessary to make volume corrections in accordance with temperature and pressure conditions, and for those meters where the velocity head of the gas is used to effect the metering, specific gravity corrections should also be made, since the specific weight of the gas alters with its dew point.

Regarding the accuracy of the meters it may be said that so long as the gas quantity to be measured is within the range of 10 to 100 per cent of the full-rated capacity, then the volume recorded should be correct within 2 per cent, so long as the meters are new and clean.

When an accuracy of within 5 per cent is satisfactory the Pitot tube or the orifice discharge method may be employed. The Pitot tube should be carefully calibrated for the size of main it is to be used in, while differential or curved pressure gauges are advantageously employed for accurate measurement of the low pressures generally involved.

Whereas a Pitot tube requires some care and skill in calibration, very little trouble is involved in arranging a small box with a circular sharp-edged orifice through which the gas is discharged.

Based upon the experiments of various researches the discharge velocity is—

$$v = a\sqrt{2g(P - Po)C},$$

in which a = discharge coefficient = 0·6 (within 5 per cent for a sharp-edged circular orifice),

$P - Po$ = pressure difference,

C = specific gravity of gas.

On the basis of the above the discharge figures given in Table 76 have been calculated.

TABLE 76

FLOW OF GAS THROUGH ORIFICES IN CUB. FT. PER MINUTE

Pressure Difference in W.G.	Diameter of Orifice											
	1″	2″	3″	4″	5″	6″	7″	8″	9″	10″	11″	12″
½″	10·87	43·5	97·8	173·9	271·7	391·3	532·6	695·7	880·5	1087	1315	1565
1″	15·4	61·6	138·6	246·4	385	554·4	754·6	985·6	1247	1540	1863	2218
1½″	18·85	75·4	169·65	301·6	471	678·6	923·6	1206	1527	1885	2281	2714
2″	21·8	87·1	195·9	348·4	544·2	783·7	1067·0	1394	1763	2177	2634	3135
3″	26·65	106·6	239·8	426·4	666·2	959	1306	1706	2159	2665	3225	3838
4″	30·8	123·2	277·2	492·8	770	1109	1509	1971	2495	3080	3727	4435
5″	34·4	137·6	309·6	550·4	860	1238	1686	2202	2786	3440	4162	4954
6″	37·7	150·8	339·3	603·2	942·5	1357	1847	2413	3054	3770	4562	5429

The table is worked out for a producer gas which has a specific gravity in reference to air at N.T.P. of ·74 $\left(\text{or } \cdot 956 \ \frac{\text{kg.}}{\text{cub. m.}}\right)$ and a discharge coefficient = 0·65.

CHAPTER VIII

OPERATING PRINCIPLES AND WORKING COSTS

THE most economical method of operation will vary with each particular type of plant and the load conditions, consequently under this heading only such points as are applicable in common to most producer gas plants will be mentioned.

Such points are :-

(1) Starting up of plant.
(2) Operation of plant.
(3) Shutting down of plant.
(4) Working costs of plant.

(1) STARTING UP OF PLANT

All parts should be *examined* to see that they are in working order.

If the plant is entirely new, the following are the main points to observe :—

The brick-lining of the producer should previously have been slowly dried out by a shallow fire and, when advisable, let out again to examine the lining and joints after drying.

All water lutes and tanks should be tested for tightness.

All valves should be opened and closed, and direction of moving spindle when opening or closing distinctly marked.

All internal parts should be freed from foreign materials accidentally left during erection, and all steam pipe branches disconnected at valves and steam blown through.

All auxiliary machinery or mechanical parts of producer should be run for a certain length of time to prove capability of continuous running.

In some cases it is advisable to test the plant itself for gas tightness. This may be done by blowing air or smoke into the plant against a closed or slightly open valve, and by covering joints, or other points to be examined for tightness, with soapy water any leakages may be located.

When all such matters have been attended to, the isolating valve of the gas producer should be closed and the chimney or purge pipe opened.

A *wood fire* is now *laid* on the grate (which should have been previously covered

with a protective layer of coarse ashes), one or more poke-holes or other doors a the base being left more or less open, thus enabling the fire to be started unde natural draught. The fire may be lit from the lower row of poke-holes or by droppin burning waste down from the top poke-holes. When the fire has become reasonabl even all round (fuel being thrown on and distributed from top to where the fir breaks through), a little air can be admitted under pressure to the fire. As th fire becomes more even and gains in depth, the air volume can be increased, and little steam may also be added (if a jet blower is not already employed).

With larger producers it is always advisable to start up in this way to ensur an even fire from the commencement, but on smaller producers provided with hand blower (say, anthracite producers) air can be supplied by this to the fire a soon as it is lit.

The quantity of coal to be charged and the fuel depth required before a suitabl gas is made will alter with the various installations; most operators are, howeve: able to judge the quality of the gas by the look of the fuel bed, or the colour of th gas, or, as is sometimes said, whether the gas is "thin or has body in it." If necessar the gas can be tested by analysis, or a thin stream of the same escaping unde pressure into the atmosphere may be lit and its quality judged by the flame.

When the gas is of satisfactory quality, and the fuel bed in a suitable stat for carrying the required load, the gas may be passed through the cleaning plan or hot gas piping, to its point of use. Since such plant or piping may be filled wit air or foul gas, it is necessary to allow the fresh gas from the producer to sweep ou the whole plant properly, so that good producer gas is supplied for use and no pocke of explosive air and gas mixtures remain. During the process of sweeping ou care should be taken that no open fires are brought near the plant so that the initi mixture of air and gas swept out cannot be ignited.

Since the starting up of a producer always necessitates blowing gas into the atm sphere, it is often an advantage to use coke for lighting-up purposes, thus minimizin some of the nuisance attached to the foul gas from volatile fuels.

Before the gas is actually admitted at the furnace or engine, etc., it shoul again be tested by analysis or by burning in a small burner with wire gauze at it mouth (to prevent back-firing).

If the plant is provided with gas fans, care should be taken (in case these creat a vacuum on the plant) that all openings to atmosphere are closed so that air cann be sucked in anywhere and mix with the gas.

So long as an even fire is made in the producer and the principle of avoidin the ignition of any possible gas and air mixture is adhered to, the starting up producer gas plant is one of the simplest and safest operations possible.

While the starting of a producer afresh will require at least one or two hour duration (and sometimes much longer) before a usable gas is made, the restartin from stand-by state is often carried out in ten to twenty minutes, depending upo the duration of the stand-by period and the state of the producer when left t stand by.

When a gas cooling and cleaning plant is installed, it is advisable to "follow up" the gas and water pipe joints as the various parts become heated up. Similar remarks apply to the steam pipes, the insulation of which should not be applied until after the joints have been followed up.

(2) OPERATION OF PLANT

Producer.—When an unknown fuel is to be used, it is advisable to work with a high *saturation temperature* for the first few days until it is found that less steam can be used without causing excessive clinker formation, when the saturation temperature may be gradually decreased until the most suitable conditions are established.

When the fuel is of a known kind, the air and steam mixture should at once be adjusted to a temperature known as suitable and *maintained* at this.

If the steam supplied varies in pressure, it is advisable to introduce a reducing valve, so that fluctuations in steam pressure will not affect the blast temperature.

For certain given conditions there is always one *depth of fuel bed* which is the most suitable. The fuel depth depends not only upon the top level of the freshly charged fuel, but also upon the top level of the ash zone. To maintain a constant fuel depth both fuel feeding and ash removal must be properly controlled; if the producer is not provided with means for the direct control of the fuel depth, it is necessary to insert through the fire from the top poking holes a measuring rod which reaches below the air slots in the grate. If such a rod is left in the fire for three to five minutes before withdrawal, it will become heated at various points of its length to temperatures corresponding to those existing in the fuel bed. It is usual to mark such a measuring rod for every foot of its length.

In many cases the operator can judge the top level of the fuel by "sight" through the top poke-holes and the ash level by "feeling" the producer casing at the lower end.

Ashing should be done as evenly and regularly as possible, but the grate should always be covered with some ashes to protect it against burning out. When the ashing is done by hand, it is an advantage to remove the ashes at different places in each shift, thus bringing down the fuel bed more evenly. When done mechanically, the grate should revolve as slowly as possible, continuous ashing being generally preferable to intermittent ashing. When the producer is worked for only one shift out of three, ashing during operation should be avoided if at all practicable.

Poking.—The fuel bed should be kept solid and free from holes, for which purpose pokers are provided. But as a general rule it can be said that the more poking is done the more is poking needed. If a producer is excessively poked the fuel bed may become upset, say fresh fuel may fall into the ash zone and cause intense clinker formation. To know just where to poke and how to poke a producer which requires it, needs more experience and skill than is often appreciated. Indeed the "success"

of a "bad" producer, or "failure" of a "good" producer, can in many cases be attributed to the degree of skill of the producer man.

In cases where the fuel requires little or no poking, it is always advisable to insert a poker through the *whole* depth of fire, say once per shift, to ensure that the fire is free from clinker.

Pokers may be made from tubing with solid chisel ends welded on, or they may be made solid right through; in the latter case they become very heavy, but are more suitable when heavy clinker has to be broken, the former type, on the other hand, being easier to handle and suitable for poking caking coals.

Cleaning Plant

Dust should be removed from dry dust outlets only when the gas is under pressure, and hot dust removed should be quenched to prevent it from catching fire when the air has access to it.

Whenever a door or poking hole is opened on the producer or on those parts of the plant where the gas is hot, the precaution should be taken to keep the face out of the line of the gas current, since the gas may take fire.

Tar should be regularly removed from the settling tanks.

All *lutes* should be maintained full of water.

All *drain* pipes should be cleaned from time to time.

The cooling *water* quantity must be regulated according to load and temperature conditions.

The gas must be tested for *cleanliness* from time to time and scrubbers repacked when needed.

If the total pressure loss exceeds the normal, locate point by sectional pressure reading (by two pressure gauges) and clean out blockage.

Daily Records

On large producer installations it is essential to keep a daily log of the pressure and temperature fluctuations on the plant, thereby enabling attention to be quickly drawn to any irregularities.

By way of example a log sheet such as is used on a Lymn type by-product recovery plant [1] is annexed.

Since the two producers on this particular plant are in parallel, the pressure loss of each individual producer will be the same; but should any producer unit possess a higher or smaller resistance than the others, it will be indicated by the difference in the quantity of fuel gasified. Obviously orifice pressure gauges may be inserted in the air blast pipes to enable more close control of the individual rates of gasification.

[1] By courtesy of the Hoffmann Manufacturing Co., Ltd., Chelmsford.

(3) SHUTTING DOWN OF PLANT

This may either be during more or less short periods, when the plant is "standing by" until gas is again required, or for the purpose of repairing or overhauling a certain part or the whole of the plant. In the first case the gas producer plant is not completely emptied of gas, which condition is absolutely essential in the second case.

When a plant is "standing by," the fire in the producer is maintained by natural draught in such a state of incandescence that the fuel bed will be suitable for a quick start up the following morning. The quantity of fuel consumed during the stand-by period increases inversely with the time required for starting up.

Placing the producer on stand-by is effected by shutting the main gas valve and opening the purge or chimney pipe on the gas outlet pipe from the producer, while a *small* opening is left in the air main or lower part of the producer for air to be drawn in. On larger producers it is an advantage to admit the air in several places so that it is equally distributed, thus not only maintaining an even fire, but also preventing the tendency to clinker formation.

The hourly fuel consumption during stand-by periods differs considerably, but on the average may be said to vary between 2 per cent and 4 per cent of that required by the plant per hour when working at full load; the fuel burnt obviously has to make up for radiation losses of the producer in addition to the sensible and potential contained in the waste gases.

Assuming the stand-by period does not exceed twenty-four hours, it should, under average conditions, be possible to restart the producer making good gas in ten to twenty minutes, depending upon the means available for restarting, *i.e.* whether mechanical blower or hand blower.

When a cleaning plant is attached to the producer, the whole of this may be left full of gas, but since air may leak into the system (due to contraction of the original warm gas), it is always an advantage when a restart is made to purge out the whole plant with fresh producer gas, thus ensuring a supply of good gas for starting up and eliminating any possible chance of an explosion taking place.

When the plant is to be completely emptied of gas to enable repairs or overhauling to be carried out, we may distinguish between cases when the producer itself is emptied or when only a certain part of the plant is separated from the other and emptied.

The extinction of the fire in the producer may be effected by blowing steam only through the fire at the commencement, and afterwards perhaps run cold water into the top of the producer (taking care not to damage iron or brickwork by too quick contraction). When the fire is thus extinguished the producer content can be withdrawn in the usual way of ashing. On smaller producer units the hot fire is often withdrawn as soon as the producer is shut down, and although this is a more wasteful procedure, it is far quicker than the extinction by steam and water.

When sufficiently cooled by air draught through the empty producer, access can be had to the interior for repairs. Whenever a producer is emptied it is advisable to remove any possible clinker growth on the brick-lining and point the same with a fireclay cement.

The cleaning out of mains or parts in which the gas during working has not come in contact with water may be done by burning out by air (see p. 376) if the mains are brick-lined, otherwise these must be cooled down by steam until the dust and soot becomes so cold that there is no possibility of it igniting when air is admitted for final cooling and ventilation.

Cold gas mains, washers, etc., or parts which do not contain dust or soot can be cleaned out by at once admitting air without any special precautions.

No man should be permitted to work inside parts of a producer gas plant unless *proper* and good *ventilating* means are provided, and *no lights*, other than protected electric lamps, should be employed.

For the same reasons as pointed out in connection with the starting up, no open lights or fires should be permitted near the plant when shutting down or sweeping out of the gas takes place.

Although very few works making producer gas exhibit notices to this effect about their plant, it would appear advisable to make it a rule to prohibit smoking on the plant and using open fires near at hand.

Similar notices *should* be exhibited to the effect that producer gas is poisonous, and may be fatally injurious to the health when breathed in large quantities. (See Home Office Factory Department, Forms No. 827 and 932.)

By these remarks it should not be understood that danger is lurking about every part of a producer gas plant, because such a plant is less dangerous to operate than most machine tools, but such reminders are advisable for those who *might* not know the possibilities of danger.

(4) WORKING COSTS

The costs of working should be reasonably easy to arrive at for the engineer or chemist in charge of any existing gas producer plant, but such costs will only apply to the specific working conditions existing in this particular works.

To give the person who considers the installation of a new plant a guide as to the estimation of the working costs, examples of how the cost of each of two different producer gas plants is estimated are given in the following :—

PLANT (A).—Self-vaporizing producer gas plant (using anthracite beans and peas), of a full load capacity of 4 million B.T.U. per hour as clean producer gas, or with producer gas at 140 B.T.U. net per cub. ft., the full load hourly gas yield = 28,500 cub. ft. (N.T.P.).

PLANT (B).—Low temperature by-product producer gas plant (using bituminous coal), of a full load capacity of 90 million B.T.U. per hour as clean producer gas at 180 B.T.U. net per cub. ft. Full load hourly gas yield = 500,000 cub. ft. (N.T.P.)

PLANT (A)

Load condition :

36 hours per week at full load.
12 ,, ,, half load.
2 ,, ,, starting up.
118 ,, ,, standing by.
Total heat quantity produced per week = 168 mill. B.T U.
,, gas ,, ,, ,, = 1,200,000 cub. ft. (N.T.P.).

Fuel available :

Heating value . . . 14,000 B.T.U. net per lb.
Cost . . . . . 40*s.* per ton.

Thermal efficiency guaranteed by makers on this fuel, say :

80 per cent at full load, including steam.
78 ,, half ,, ,,

Fuel consumption :

		Hourly.	Weekly.
Full load :	$\frac{4,000,000 \times 100}{14,000 \times 80}$	= 357 lbs.	12,852 lbs.
Half load :	$\frac{2,000,000 \times 100}{14,000 \times 78}$	= 183 ,,	2,196 ,,
Starting up :	10 per cent of full load consumption .	= 36 ,,	72 ,,
Standing by :	3 per cent of full load consumption .	= 11 ,,	1,298 ,,
	Total		16,418 lbs.

Fuel costs :

Per week = 7·33 tons @ 40*s.* . . . . . = £14 13*s.* 2·4*d.*

Labour :

1 man half time @ £3 10*s.* 0*d.* per 52 hour week . . = £1 15*s.* 0*d.* per week.

Power :

One centrifugal fan using . . . 2 K.W.H. @ 1½*d.*
or, per week . . . . . 100 K.W.H. = 12*s.* 6*d.*

Cooling water (fresh water supplied to plant) :

Say 5 cub. ft. per 1000 cub. ft. of gas or 6000 cub. ft. per week,
or, 37,500 galls. per week @ 9*d.* per 1000 galls.,
or, £1 8*s.* 1·5*d.*

Repairs and maintenance and sundries :

2 per cent per annum on total capital outlay (£950).
or, £19 per annum @ 50 working weeks,
or, 7*s.* 7·2*d.* per week.

Depreciation and interest, say 12 per cent:

Cost of gas plant itself erected	=£825
Foundations	= 75
Incidental expenditure, say	= 50
Total	£950

	@ 12 per cent per annum	£114.
or,	per week	£2 5*s.* 7·2*d.*

SUMMARY OF WEEKLY WORKING COSTS—PLANT (A)

	£	*s.*	*d.*
Fuel	14	13	2·4
Labour	1	15	0
Power	0	12	6
Water	1	8	1·5
Repairs, etc.	0	7	7·2
Depreciation and interest	2	5	7·2
Total	£21	2	0·3

Cost of gas per therm	=3·01 pence.
,, 1000 *cub. ft.*	=4·22 ,,

PLANT (B)

Load condition:

7000 hours per annum	at full load producing	630,000 mill. B.T.U.
1600 ,, ,,	¼ load producing	36,000 ,,
160 ,, ,,	standing by producing	Nil
	Total	666,000 mill. B.T.U.

Fuel available:

Heating value	12,000 B.T.U. net per lb.
Cost	18*s.* per ton.

Makers guarantee—

Thermal efficiency at full load	=80 per cent.
,, ¼ load	=75 ,,
Sulphate of ammonia yield per ton coal gasified	=90 lbs.
Tar yield per ton coal gasified	=18 galls. (dry tar).
Steam required for gas producers, blowers, sulphate evaporation, and tar dehydration	=1·1 lbs. per lb. of coal gasified.

Fuel consumption :

(*a*) For net gas quantity—

		Tons per annum.
Full load :	$\frac{90,000,000 \times 7000 \times 100}{12,000 \times 2240 \times 80}$. =	29,300
Quarter load :	$\frac{22,500,000 \times 1600 \times 100}{12,000 \times 2240 \times 75}$. =	1,790
Stand-by, restarting, etc., say	. . =	10
Total	. . .	31,100

(*b*) For steam raising—

Assume all steam raised in boilers fired by cold gas from producer plant, the boiler efficiency being 85 per cent, feed water temperature = 60° F., and steam pressure = 100 lbs. per sq. in.

1 lb. of live steam contains	. . . . .	1160 B.T.U.
1 ,, ,, requires	$\frac{1160 \times 100}{85}$	= 1365 ,,
1 lb. of coal gasified yields	$\frac{12,000 \times 80}{100}$	= 9600 ,,
1 ,, ,, requires 1·1 lbs. of steam	. .	= 1500 ,,
1 ,, ,, yields as net gas	. . . . .	8100 ,,

Total coal to be gasified, including steam raising :

$$31,100 \times \frac{9600}{8100} = 36,900 \textit{ tons per annum.}$$

Annual fuel costs . . . 36,900 tons @ 18*s*. = £33,210.

Labour.				Rate of Pay.	
Duty.	Number per Shift.	Number of Shifts.	Number per 24 Hours.	Per Week.	Per annum of 52 Weeks.
				£ *s.* *d.*	£
Producers and boiler . . .	4	3	12	3 5 0	2028
Ash and coal handling . .	2	2	4	2 15 0	572
Machinery house . . .	1	3	3	3 5 0	507
Tar tanks, etc.	1	3	3	2 15 0	429
Tar dehydration	1	2	2	3 0 0	312
Sulphate evaporation . .	2	2	4	3 0 0	624
Sulphate packing, etc. . .	2	1	2	2 15 0	286
Charge-hand	1	3	3	5 0 0	780
Total . . .			33		5538

Management and general charges, etc., say, £1000 *per annum.*

Power :

Maximum load . . . . = 150 kw.
Average ,, ... = 130 ,,

All power for auxiliaries generated by using live steam from boiler in 150 kw. exhausting turbo generator, the exhaust steam being conveyed to producers and sulphate plant. In this way *no charge for power* is required.

Water :

For steam raising 1·1 × 36,900	= 40,500 tons.	
+ 5 per cent for wet steam	= 2,000 ,,	
		42,500 tons.
For gas cooling (water cooling tower installed), sulphate plant condenser, surface evaporation, etc., say .		56,500 ,,
		99,000 tons.

22,200 thousand gallons @ 6*d*. . . . . = £555 per annum.

Repairs and maintenance :

2½ per cent on total capital outlay . . . . . = £825 per annum.

Bags for sulphate, oil, waste, and sundry materials :

20 bags per ton sulphate @ 6*d*.	
Bags for sulphate = 1480 × 10*s*.	= £740 per annum.
Oil, waste, and sundry materials, say	= 400 ,, ,,
Total	= £1140 per annum.

Sulphuric acid :

1 ton of sulphate of ammonia requires 1 ton sulphuric acid (140° Tw.).
1480 tons acid @ £3 . . . . . = £4440 per annum.

Depreciation and interest :

Cost of gas plant with boiler, water cooling, and power plants .	= £29,000
Foundations and buildings	= 3,000
Sundry expenditure	= 1,000
	£33,000
@ 12 per cent per annum	= £3960

By-products made :

	£	*s.*	*d.*
Sulphate of ammonia : $\frac{36,900 \times 90}{2240}$ = 1480 tons @ £14 10*s*. 0*d*. per ton	= 21,460	0	0
Tar : 36,900 × 18 = 664,200 gallons @ 3*d*. per gallon	= 8,302	0	0
Total . . .	£29,762	0	0

SUMMARY OF WORKING COSTS—PLANT (B)

	£	s.	d.
Debit:			
Fuel	33,210	0	0
Labour	5,538	0	0
Management and general charges	1,000	0	0
Water	550	0	0
Repairs and maintenance	825	0	0
Sundry material and stores	1,140	0	0
Sulphuric acid	4,440	0	0
Depreciation and interest	3,960	0	0
Total debit	£50,663	0	0
Credit:			
By-products	£29,762	0	0
Total annual working costs	= £20,901	0	0

Cost of gas per therm $= \frac{20{,}901 \times 240}{6{,}660{,}000}$ = ·75 pence.

Cost of gas per 1000 cub. ft. $= \frac{20{,}901 \times 240 \times 180}{666{,}000{,}000}$ = 1·35 ,,

It will be plain from the above that so many conditions affect an estimate of this kind that it is essential that the basis of estimating the various items involved be stated in detail.

Only very few working cost estimates are so complicated as that of Plant (B), and many are very much simpler than that of Plant (A). As an instance, the estimation of the working costs of semi-gas-fired furnaces or hot gas producer plants involves only a few single items of expenditure.

PART IV

OUTLINE OF PRODUCER GAS UTILIZATION

EVERY manufacturing concern naturally desires to use that system of power or heat generation which suits the conditions obtaining and at the same time is the most economical.

With a power plant the application of gas to a prime mover is nowadays practically a "cut and dried" proposition, which, however, cannot be said about the application of gas for heating. Whereas the principle of gas application for a gas power plant in a steel works, a glass works, or a motor car works will be similar and the same efficiency will be obtained under equal load conditions, the application of the gas to the various heating processes of these three works will differ considerably, depending upon the chemical or metallurgical process involved.

Economy in operation may therefore be far simpler to judge in cases where the use of producer gas is considered in reference to power production than to heat application, because each heating process requires separate and special consideration if the application is to be efficient.

It is therefore essential for works interested in heat application to know, not only that producer gas can be supplied in a certain form at a certain cost per unit of heat, but also that its application in their particular furnaces or for their particular process will be economical.

The whole subject of application of producer gas is a very extensive one and worthy of a separate treatise, therefore we shall in the following give in outline only some typical examples of cases in which producer gas has been employed, and show how to judge the furnace utilization efficiency of various gases when applied in an equally efficient way, and a brief comparison of the properties of various gases when used in furnaces :—

CHAPTER IX.—TYPICAL APPLICATIONS.

,, X.—COMPARISON OF UTILIZATION EFFICIENCY OF VARIOUS GASES IN FURNACES

CHAPTER IX

TYPICAL APPLICATIONS OF PRODUCER GAS

For conversion into work either directly or indirectly we can use producer gas in—

Gas engines.
Boiler to raise steam for engines or turbines.
Humphrey pump.
Gas turbine.

For application of heat either directly or indirectly we can use producer gas for—

Melting.
Fusing.
Calcining.
Burning (clay).
Reheating, forging, and other solid metal treatment.
Drying.
Evaporation and rectifying.
etc., etc., etc.

POWER APPLICATIONS

At the present stage of industrial development the *gas engine* converts about 25 per cent of the heat of the producer gas into useful work when the engine is working at full load, but whereas the efficiency of steam engines or turbines does not decrease appreciably with a decrease in the load factor, the reverse is the case with the gas engine. The employment of a single gas engine will therefore not be found economical for works with power plants of a low load factor, while if several gas engine units can be installed in the power station the wasteful procedure of carrying low load on any single engine unit can be reduced to a minimum.

Being of the internal combustion reciprocating type, the gas engine requires more ample dimensioning than a steam engine for the same power, hence its weight and cost per installed H.P. is higher. For the same reason it is not possible to build gas engines in such large units as it is possible to build steam turbines. Whereas

the gas engines in this country are mainly of the vertical multi-cylinder type of a maximum of, say, 1500 B.H.P., the horizontal engine is more in vogue in Germany, where tandem units of up to 5000 B.H.P. have been built.

The amount of heat that a gas engine can turn into work from a given gas depends upon how far the gas and air mixture can be compressed without pre-ignition, since the higher the compression pressure the higher will be the explosion and mean effective pressure. Since the effect of the compression is to increase the temperature of the combustible mixture, the tendency for a gas to pre-ignite will depend in the first instance upon its ignition temperature.

Gas.		Approximate Average Ignition Temperature ° C. when mixed with Air.
Carbon monoxide	CO	650
Hydrogen	H_2	580
Methane	CH_4	700
Sulphuretted hydrogen . . .	H_2S	360

Practice bears out that a gas high in carbon monoxide and low in hydrogen content can be compressed more than a gas of the reverse composition (without undue pre-ignition risks), thereby confirming in general the above figures.

The ignition temperature will also alter with the concentration of the particular gas in the combustible mixture, and in practice it would appear that a fluctuation in gas quality (even increase in methane content) is the most serious limitation as to the permissible degree of compression of the engine charge.

The main object of a gas producer plant used for driving gas engines is, therefore, constancy of gas quality, for not only is a smooth working without pre-ignition the result, but the air and gas valves can be so adjusted that the least amount of excess air is retained in the exhaust gases. A well-operated producer gas engine should show not more than 2 to 2·5 per cent of oxygen and no carbon monoxide in the exhaust gases.

With the steam engine or turbine the maximum conversion efficiency from heat to power may be said to have been achieved, because the heat which is retained in a modern plant as latent heat in the steam to be condensed is decreased to the minimum, being in a form not capable of utilization. The same cannot be said about a gas engine, because its main sources of heat loss, the exhaust gases, and the jacket water are capable of further utilization than has so far been the case.

An exhaust gas boiler of the multi-tubular type, and with a feed water heater, can raise from the exhaust gases of most engines between 2 and 3 lbs. of live steam per B.H.P. developed in the gas engine. If such steam be utilized in a steam turbine, additional power (say 25 per cent on gas engine H.P.) will be available. In other words, a " mixed " power station consisting of 80 per cent gas engines and 20 per cent steam turbines would develop the same power for 20 per cent less fuel burnt in the gas producer plant as a plant consisting of 100 per cent gas engines without exhaust gas boilers. A " mixed " power station would, however, have

certain disadvantages connected with its operation and would only be suitable for larger installations.

The hot water from the gas engine cooling system if circulated over an air-saturating tower on the gas producer plant can supply all the steam required even on a by-product producer gas plant.

There is no danger in maintaining the jacket water of most engines at temperatures approaching 90° C., when a positive circulation is ensured, so that where a jacket water air saturator system is used it should be possible to reduce the fuel consumption per unit of power by a percentage varying from 5 to 20 per cent, depending on the steam consumption of the gas producer plant.

A producer-gas-fired *steam boiler* does not differ from boilers fired by other gases except in the design of the burner. The matter of steam raising by means of producer gas, whether used for power purposes or not, is one in regard to which all the remarks made in Chapter X. apply; therefore that burner and boiler design which will give the highest efficiency is the one in which the highest initial and the lowest final temperature of the products of combustion is obtained.

Gas firing of a boiler in contradistinction to coal firing may claim to possess the advantages of easy and more perfect control (hence higher thermal efficiency), elimination of labour for coal and ash handling, no wear and tear on grates, and no sooting or flue-blocking troubles. With certain types of gas-firing arrangements further savings are claimed in regard to decreased first capital outlay and space occupied.

Although a higher thermal efficiency is generally obtained when a boiler is gas fired instead of coal fired, it should not be overlooked that the over-all thermal efficiency of a gas-fired boiler with a gas producer is generally *less* than that of an equally modern direct coal-fired boiler, except perhaps in cases where the hot crude producer gas is burnt in the boiler immediately it leaves the producer. Whether the over-all working costs are less depends upon the costs of production of the producer gas, which may have been made from a lower grade of fuel than used under the boilers or generated with the simultaneous recovery of by-products.

When the solid fuel available contains an excessive amount of moisture, say peat, wood, lignite, it is, however, possible to achieve a higher over-all thermal efficiency with a boiler fired with cold producer gas instead of direct firing with the moist fuel; the reason being that in the case of the producer gas the moisture content of the fuel is condensed out during the cooling process, and thus the attainment of a very much higher initial combustion temperature, and therefore higher gas-firing efficiency, becomes possible in the boiler.

We may speak about three types of gas-fired boilers depending upon the pressures of the gas and air used for combustion in reference to the atmospheric pressure.

(*a*) Gas under pressure and air sucked in by chimney draught. This is the most common type to which belong such burners as the Terbec, Cumberland, Hunter, etc. This system can be applied to most of the existing types of coal-fired boilers.

(*b*) Gas and air under pressure as used in high temperature furnaces. When the troubles of possible back-firing are eliminated this type of burner is likely to give the highest thermal efficiency on account of the intimate admixture of air and gas in the compressed jets, which results in a high initial temperature. The first surface combustion boilers put forward by Bone and McCourt were of this type. In the present Bonecourt-Kirke boiler type, however—

(*c*) Gas and air is thoroughly intermixed by the induced draught of a high vacuum fan handling the hot products of combustion. In most cases the gas is supplied under pressure to a large number of jets, but the gas and air mixture is at a pressure below atmospheric when ignited.

When fired with cold producer gas the thermal efficiency of the boilers under headings (*b*) and (*c*) has been found to be between 85 and 90 per cent, when the boiler includes a feed-water heater. When the burners under heading (*a*) are fitted to existing boilers of reasonably efficient design it should be possible to achieve a gas-firing efficiency of 70 to 80 per cent.

It is obviously best to use producer gas in its cooled and cleaned state for boiler firing, because it can be minutely controlled in valves and can be mixed with the air before combustion. On the other hand, there is no difficulty in burning hot crude producer gas efficiently in a boiler so long as the burner is designed suitably for the purpose.

Before leaving the subject of power production from producer gas, mention should be made of two other means for converting the heat in the gas into work, which, although they cannot be said to have been applied on a wide commercial scale, indicate the line of possible future gas power developments.

The *Humphrey pump* is the invention of Mr. H. A. Humphrey, M.I.C.E., who in 1909[1] laid down the following as being the requirements of an *ideal* internal combustion engine :—

(1) It must be capable of giving four unequal strokes.
(2) It must utilize the whole possible range of expansion down to atmospheric pressure.
(3) The energy must be delivered direct to the fly-wheel without any intermediate parts.
(4) There must be internal cooling arrangements so that the cylinders may be made of any size within the limits of structural possibility.
(5) There must be an ignition device, but as there is no two-to-one shaft to operate it, it must be entirely automatic and depend only upon the compression pressure having reached a maximum.
(6) Difficulties connected with contraction and expansion must be eliminated.

By the use of a "water piston" which also serves as a "reciprocating fly-wheel" these conditions would seem to have been fulfilled in the Humphrey pump.

[1] "Internal Combustion Pump and other Applications of a new Principle," *Proc. Inst. Mech. Engineers*, December 3, 1909.

Fig. 333 shows a diagram of the first experimental pump, which is the simplest form of construction.

A is the explosion chamber, fitted at the top with gas and air inlet valve B and exhaust valve C, the seat of the latter being at the lowest level. The explosion chamber is continued by a U-shaped pipe D, with which a low-level tank E and a high-level tank F are in communication. This pipe is charged with water which moves forward and backward, the utilization of the particular properties possessed by this reciprocating water column being the main principle of this invention.

Assume a compressed combustible charge at the top of A is ignited, the consequent increase of pressure forces the water column to move towards tank F,

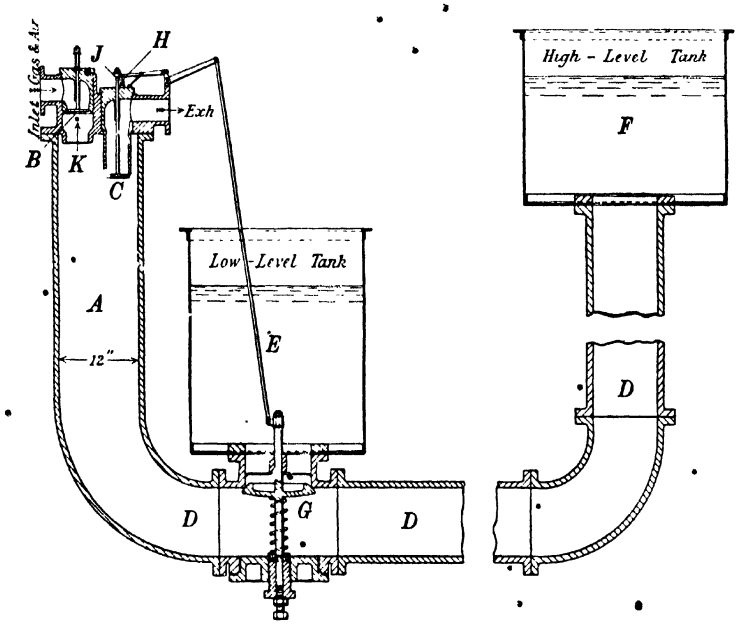

FIG. 333.—HUMPHREY PUMP.

thereby increasing the high-water level. Due to the kinetic energy of the moving water the combusted charge in A will expand to a pressure which is less than the pressure of the water in the tank E, thus causing the suction valve G to open and the admission of fresh water to the pump.

When the energy of the water column is spent, it starts on its "return stroke," causing the products of combustion in A to be exhausted through valve C (the suction valve G automatically closing on the reversal of the flow). When the returning water reaches the level of valve disc C, this closes automatically, while the small quantity of exhaust gases remaining in A is compressed until the water column is again brought to rest, and restarted on a shorter second forward stroke,

during which gas and air is sucked in through B; this combustible mixture is compressed on the second return stroke ready for ignition and the repetition of a new operating cycle.

A five-unit pumping installation[1] of a total capacity of 180 million gallons per diem was installed at Chingford, Essex, for the Metropolitan Water Board, the pumps being operated by a Dowson type of anthracite producer gas plant. The demonstration tests revealed that less than 1 lb. of anthracite was required per water H.P., thus demonstrating in full the economy of this type of gas pump over the ordinary steam-driven or electrically-driven pumping outfits.

In accordance with a private communication from Mr. H. A. Humphrey, immediately preceding the outbreak of war the Egyptian Government placed a contract for the erection of a gas-pumping station at Mex, Alexandria, of 1000 million gallons daily pumping capacity; this contract was, however, subsequently cancelled by clients due to financial conditions brought about by the war.

The Humphrey pump is now manufactured by Sir Wm. Beardmore, Ltd., Glasgow, and by the Worthington Pump and Machinery Corporation, U.S.A.

Those interested in the design of this pump are referred to articles which have appeared in *Engineer*, March 14, 1913, or *Engineering*, February 14, 1913, while the theory and mathematical treatment of the machine may be found in *Engineering*, February 10, 1910, and in *Zeitsch. d. Ver. Deut. Ing.*, January 1913.

In connection with the use of turbines for power production it is interesting to know that the Siemens-Schuckertwerke, Berlin, built a two-cycle Humphrey pump of 1000 B.H.P. which supplied a water turbine driving an electric generator. The very large size and weight of the apparatus, however, militated against its chances of competition with the compact modern steam turbine.

A 1000 B.H.P. *gas turbine* was built in Germany previous to the war. It was the invention of Herr H. Holzwarth, and was of the vertical type, the generator being superimposed upon the turbine. On the basis of the operating results obtained by the same the Thyssen Company of Muehlheim have lately built a 500 H.P. oil turbine, and had in the summer of 1922 under construction a 5000 kw. unit. Both of these turbines are of the horizontal type, generally as shown in fig. 334.

A large number of horizontal pear-shaped combustion chambers are arranged concentrically round the turbine shaft between the turbine wheel and the electric generator. The cycle of operation in each chamber is the admission of gas and air and the explosion, with consecutive expansion and emission of the products of combustion through nozzles on to the turbine blades. The various chambers work in rotation, the action of the gases ejected out of the various nozzles on the turbine wheel being analogous to, say, a machine-gun fire.

When one considers that in the steam turbine the difference between the initial and final pressures is of a ratio of, say, $\frac{1}{200}$, while that of a gas engine or turbine is at most $\frac{1}{20}$, it is obvious that (even when the large heat waste in the condensed

[1] *Engineering*, December 1913.

steam is borne in mind) it is essential to employ very much higher temperatures in the gas turbine than in the steam turbine if the same heat to power conversion efficiency is to be obtained.

The chief difficulty, therefore, that is to be considered in connection with the operation of the gas turbine is the effect upon the blades of the impinging hot gases. The average temperature of the gases in the turbine wheel is about 400° to 450° C.,

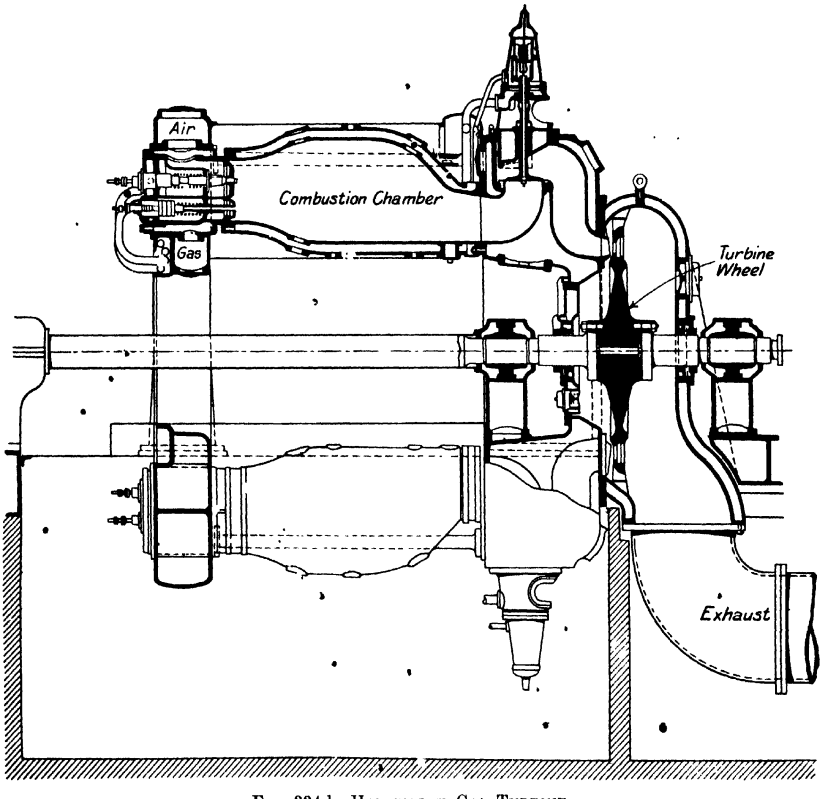

FIG. 334.[1]—HOLZWARTH GAS TURBINE.

while the maximum temperature may be over 1000° C.: it is claimed, however, that the metal now to be employed in the Holzwarth turbine is capable of withstanding these temperatures, and that the efficiency will approach that of the gas engine.

The heat consumption per B.H.P. of the 1000 H.P. vertical turbine was about 16,000 B.T.U., and even if the new horizontal turbine should not reach the gas consumption of 10,000 B.T.U. usual in gas engines, it should not be overlooked that the capital cost per installed B.H.P. is likely to be much less than that of present-day gas engines. At the moment we must, however, wait to see whether the

[1] As per Mr. Arthur H. Lymn, London.

expectations as to the performance of the new machine will be achieved in regular works operation.

HEAT APPLICATIONS

If producer gas is to be economically applied to any operation requiring heat treatment, it is not only necessary to consider the process to be carried out from

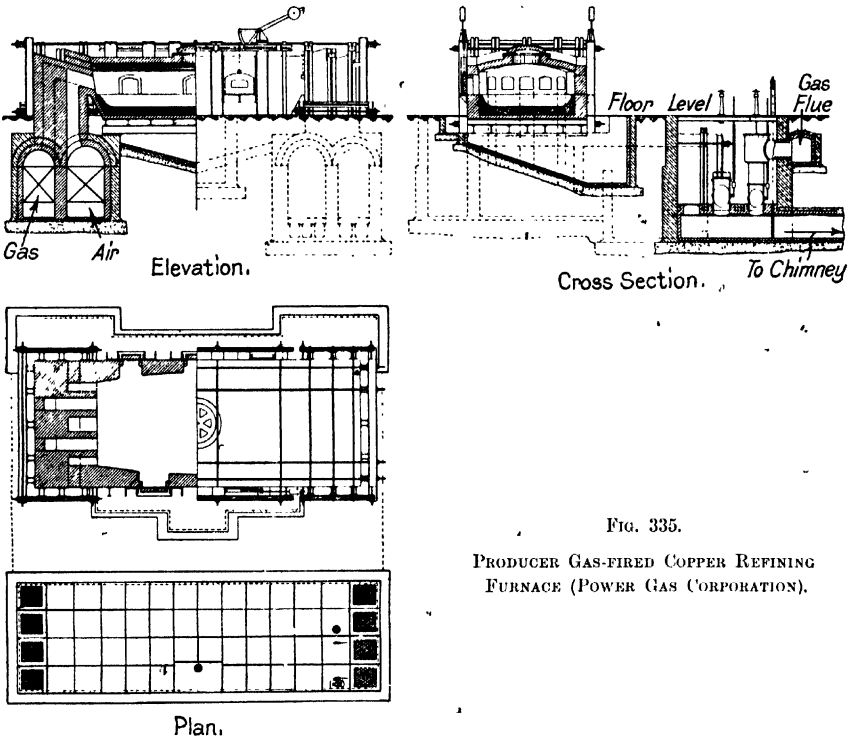

FIG. 335.

PRODUCER GAS-FIRED COPPER REFINING FURNACE (POWER GAS CORPORATION).

a physical and chemical point of view, but we also must remember that the temperature conditions existing throughout the whole period of treatment, the time of treatment, the physical state, and other properties of the raw material and the final product, the operating conditions of the particular works, the cost of installation, the furnace construction materials available, etc., etc., are factors which all influence the design of furnace, and hence also the method of applying the producer gas.

Fig. 335 shows a melting furnace using hot crude producer gas and particularly designed for the *refining of copper* ores ; it is, however, similar in design to the open

hearth type of furnace extensively employed in steel works, since the temperature required to obtain a properly liquid slag from the ore approaches that required in many Siemens furnaces.

To enable the high temperature required to be economically achieved the gas and air are pre-heated before combustion in separate underground chequer brick regenerators which have been previously heated up by the hot products of combustion leaving the furnace. To enable a sufficient amount of pre-heating to be continuously obtained the flow of the gas and air (and consequently also the flow of the products of combustion) is reversed one or more times hourly. Such a furnace is therefore called a *gas and air reversing regenerative furnace*. When the gas supplied has a sufficiently high temperature, or is sufficiently high in calorific value, the gas regenerating chambers are sometimes omitted, the furnace thus being called a *reversing air regenerative furnace*.

Fig. 336 shows another type of melting furnace, viz. for *melting of lead*. The furnace is mounted on rollers, thus being of the portable type. It is arranged for the use of cold producer gas, the same being admitted in a bunsen type of jet. The melting point of lead being 327° C., it is not essential from the point of view of heat economy to pre-heat either air or gas.

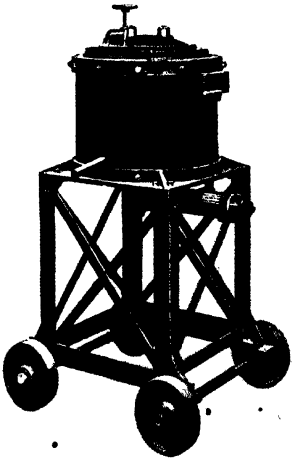

Fig. 336.—Producer Gas-fired Lead Melting Pot (John Wright & Co.).

Fig. 337 shows a gas and air reversing regenerative *glass tank furnace* used for large-scale glass production. The regenerative system is in principle the same as that shown in fig. 335, but the flame passes across the hearth instead of along it.

The regenerators of glass furnaces or furnaces for products which remain fluid over a wide temperature range should never be placed under the hearth (or tank). This precaution is necessary to prevent regenerator blockages by the possible percolation of the furnace contents. When the furnace is to deal with valuable metals (say copper, tin, etc.) the possible loss of metal by percolation is of serious consequence, and the hearth should be air cooled and provided with a pit for collecting any such leakages (see fig. 335).

When a purer glass is required the flame of the gas must not be brought into contact with the molten charge, which is contained in "pots." A vertical section through *a glass pot furnace* is shown in fig. 338.

The furnace is of the semi-gas-fired type, the gas from the producer being admitted through a central opening in the furnace, which contains side slots for the air. The top of the furnace containing the pots is circular in plan, and the products

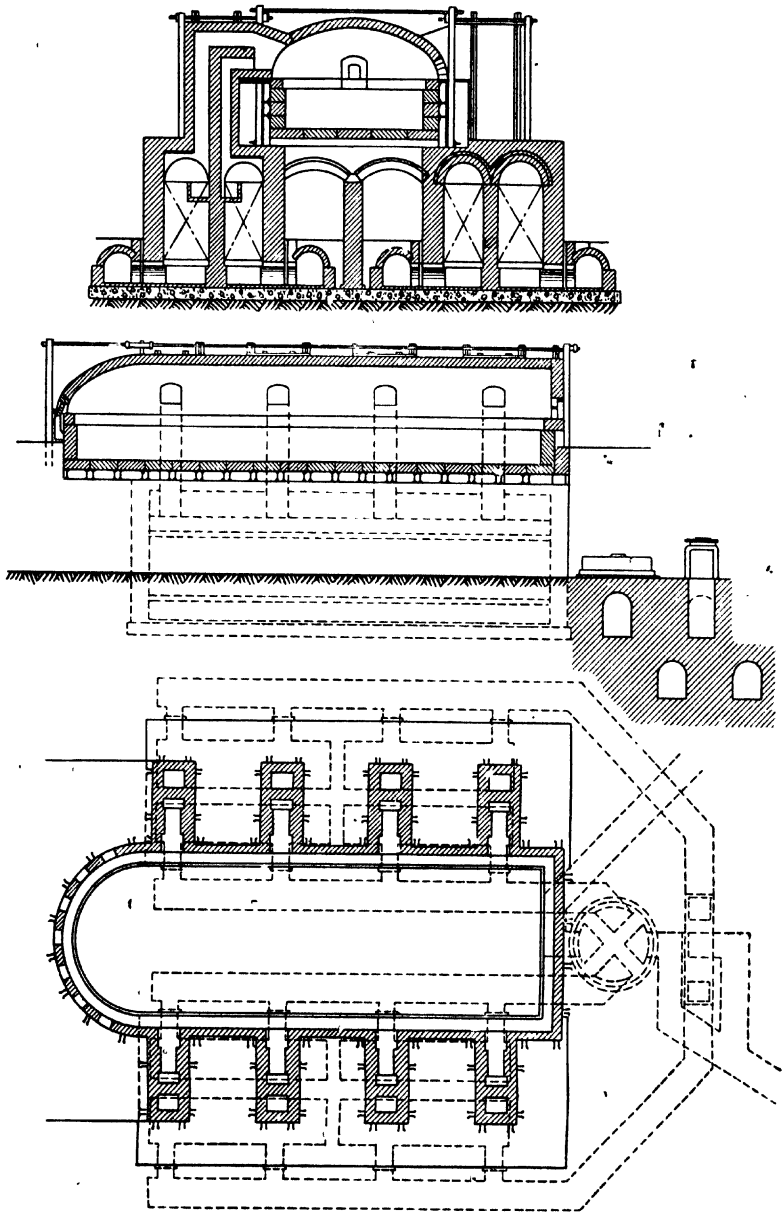

FIG. 337.—PRODUCER GAS-FIRED GLASS TANK FURNACE (STEIN & ATKINSON).

of combustion, after sweeping over and round the pots, are removed through several holes near the floor.

Another example of a furnace in which the product is heated indirectly is the *enamelling muffle* shown in fig. 339. In this the flame passes all round the muffle, which should be made of thin refractory material of high heat conductivity.

The furnaces shown in figs. 338 and 339, as well as that in fig. 342, are all provided with air pre-heating arrangements, which consist of a chamber charged with specially shaped hollow bricks joined together in such a way that the interstices left form separate ducts for the air and for the hot products of combustion. Such furnaces are designated as *air recuperative furnaces*.

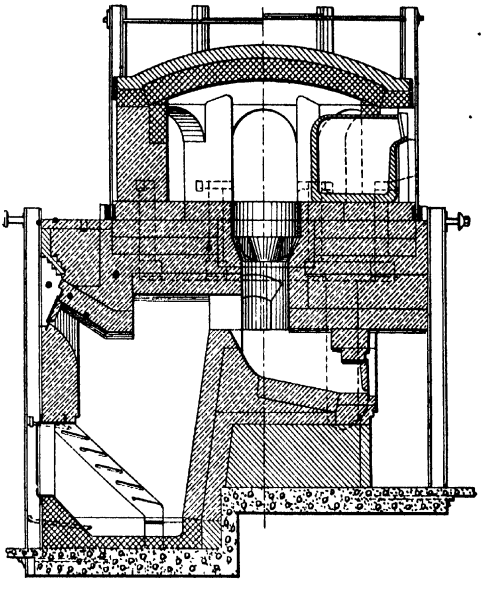

FIG. 338.—PRODUCER GAS-FIRED GLASS POTS (HERMANSEN).

The advantages of the recuperative system of pre-heating over the air regenerative system consist in the absence of reversing valves, with

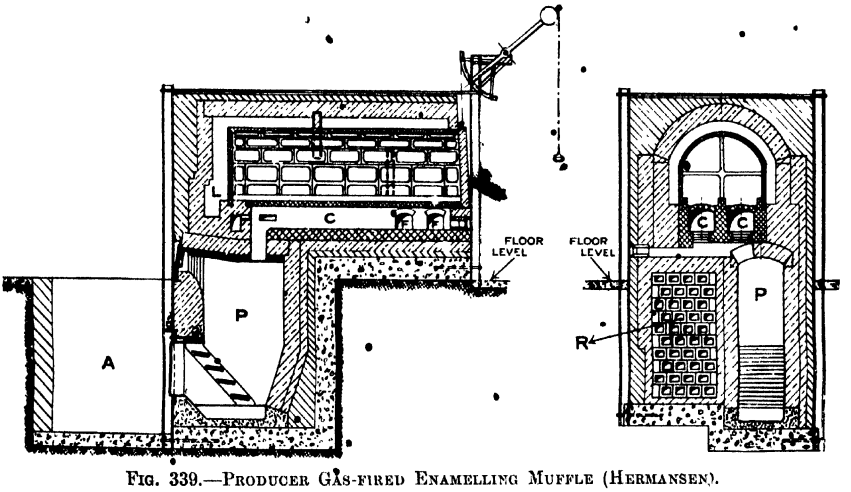

FIG. 339.—PRODUCER GAS-FIRED ENAMELLING MUFFLE (HERMANSEN).

consequent labour and attention, and in the fact that the pre-heating temperature

is maintained constant and does not fluctuate, as is the case between the reversing periods of the regenerative system.

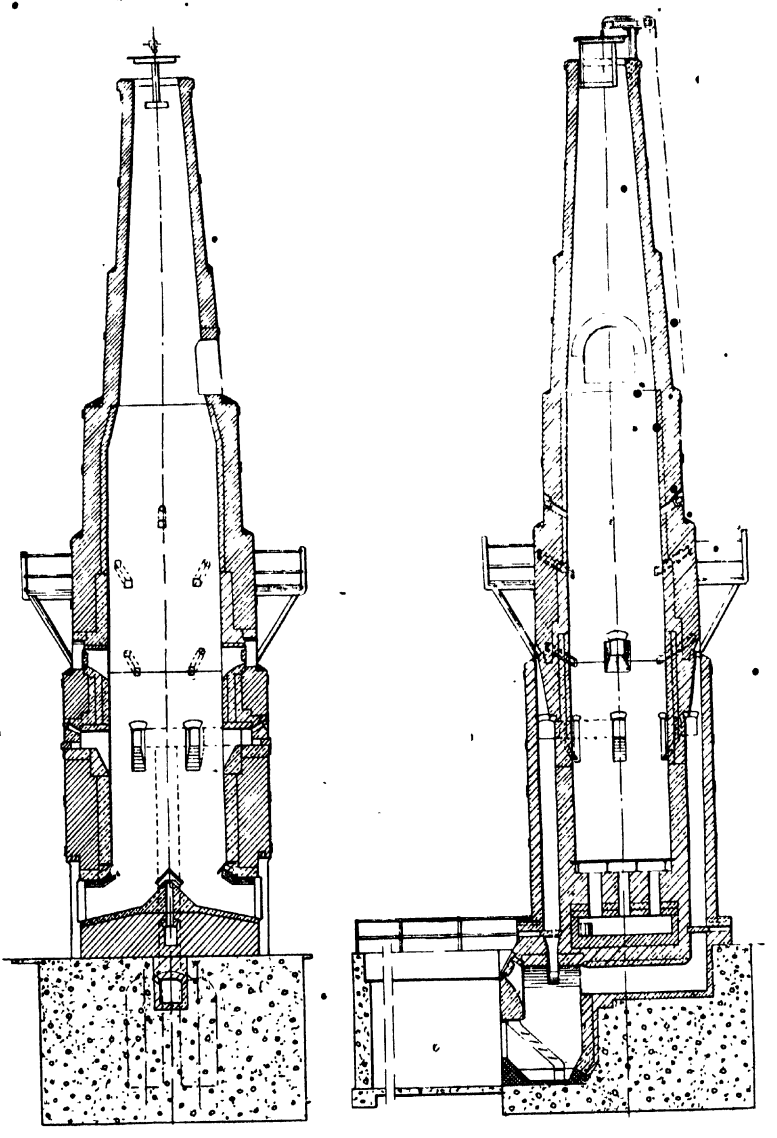

FIG. 340.—PRODUCER GAS-FIRED LIME KILN (HERMANSEN).

On the other hand, the regenerative system has the advantages of heat transfe by direct contact and of the absence of leakage of flue gas into air.

To avoid serious leakages recuperators are generally not made more than 6 feet in length, and the closely fitting joint between each brick or block is recessed, while the weight of each block is carried directly from the underlying blocks and not by the joint. Recuperator joints are sometimes pointed with sodium compounds such as the carbonate, which when heated up form a " plastic glass " joint with the silica in the bricks.

A producer gas-fired *lime or dolomite kiln* is shown in fig. 340. The gas enters through slots about one-third way up the kiln, while some of the air for combustion of the gas is passed through the calcined material, thus cooling the latter somewhat previous to discharge.

Seeing that the waste gases from a lime kiln are rich in CO_2, it is not unlikely that operating economy could be obtained by partly substituting the steam in the air blast by such gases, instead of by ordinary products of combustion of producer gas.

Fig. 341 is an example of one type of *brick kiln* fired by producer gas.

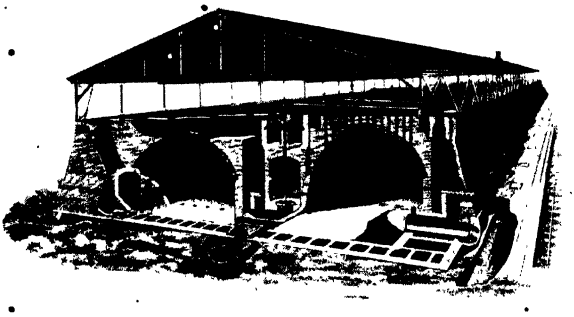

FIG. 341.—PRODUCER GAS-FIRED TUNNEL TYPE OF CONTINUOUS BRICK KILN (INTERNATIONAL CO.).

The kiln consists of two tunnels, each of which is divided into a series of compartments by temporary arches. The bricks in each compartment are in a different stage of the burning process from those in the next compartments; the air for combustion being passed through compartments of hot burnt bricks, thus being gradually pre-heated before burning the gas at the hottest compartment, while the products of combustion pass through green brick compartments of gradually decreasing temperature, thus pre-heating the bricks before burning. When the bricks in the hottest compartment are burnt, the gas is conducted to the nearest chamber with pre-heated bricks, and so on.

Fig. 342 shows a *forge furnace* of the air recuperative type and fired by means of hot producer gas. This design gives a good idea as to the flow of air and products of combustion through the recuperators.

Fig. 343 shows *a high-speed tool furnace* fired by cold air and gas. The furnace is of the surface combustion type, and the cold gas and air are intimately mixed together under high pressure before being injected upon the refractory material. The hot products from the lower chamber are utilized further in the upper chamber.

Fig. 344 shows a *rotary heat treatment furnace* in which the gas burns at the

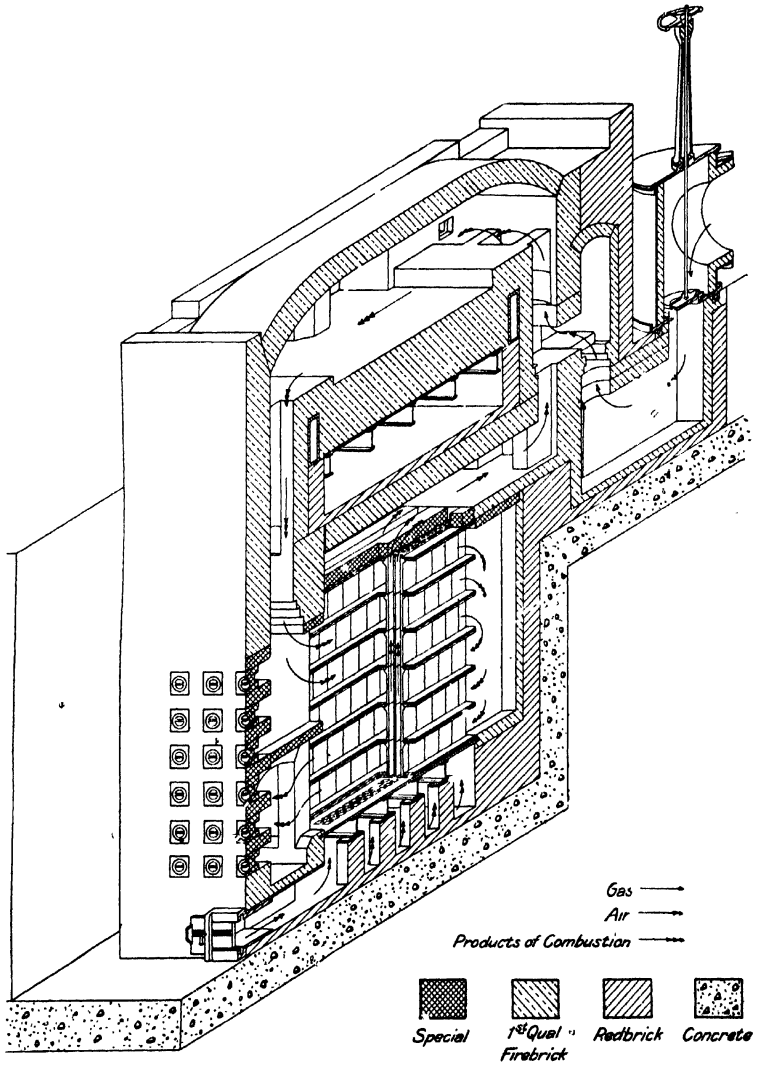

FIG. 342.—PRODUCER GAS-FIRED RECUPERATIVE FORGING FURNACE (STEIN & ATKINSON).

discharge end of the rotary drum, which is provided with an internal spiral conveying the material to be heated in counter direction to the path of the hot gases.

Fig. 345 shows a *carburizing stove* such as is used for cold clean producer gas. The gas enters at the base of the furnace through a series of bunsen burners,

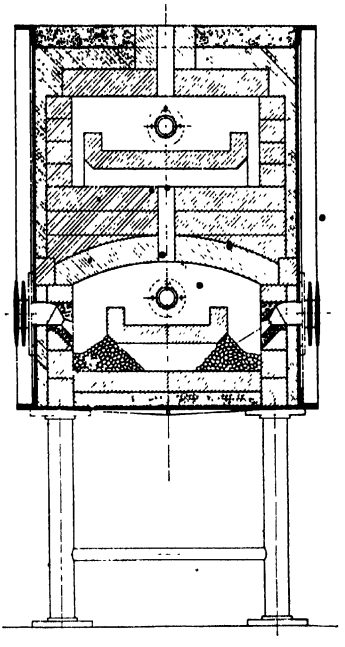

FIG. 343.—HIGH-SPEED TOOL FURNACE (BRITISH FURNACES LTD.).

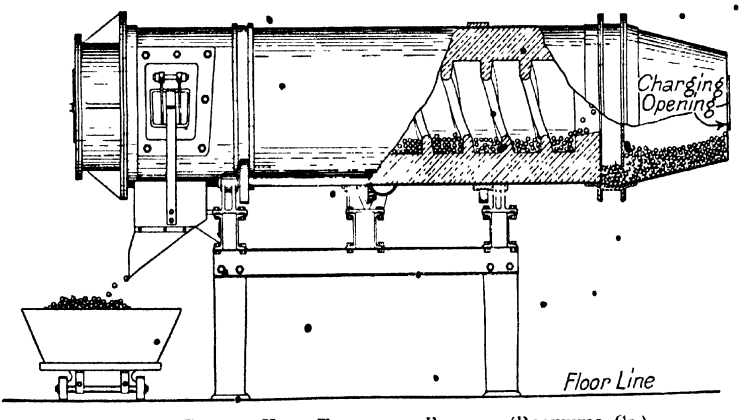

FIG. 344.—ROTARY HEAT TREATMENT FURNACE (ROCKWELL CO.).

while secondary air is admitted through adjustable openings in the sides of the stove casing.

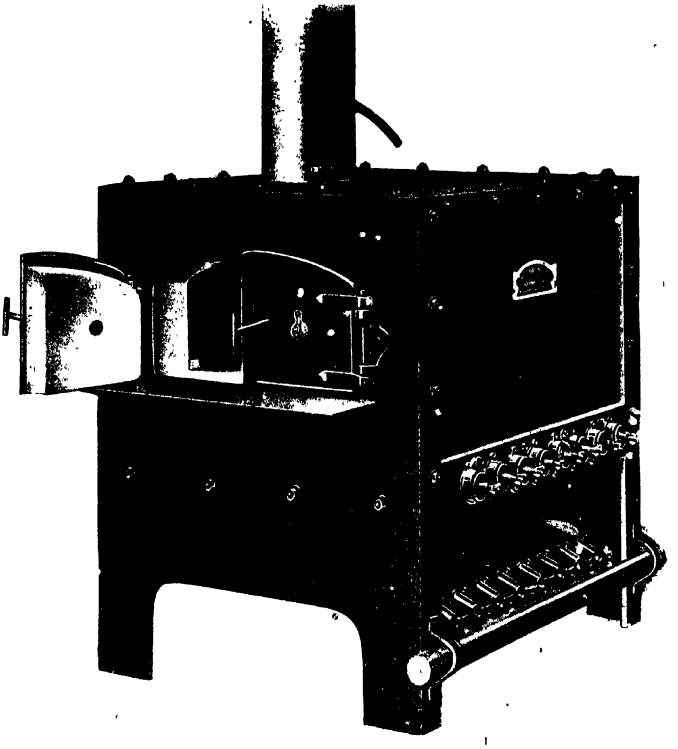

FIG. 345.—PRODUCER GAS-FIRED CARBURIZING STOVE (RICHMOND)

FIG. 346.—PRODUCER GAS-FIRED PLATE HEATING FURNACE (POWER GAS CORPORATION).

Fig. 346 is a photograph of a producer gas-fired *plate and angle heating furnace,* such as is used in shipyard or constructional steel workshops.

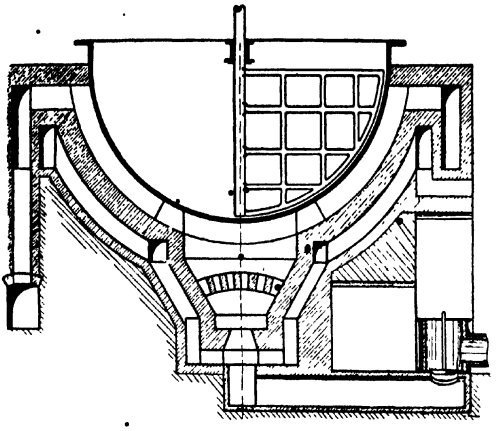

FIG. 347.—PRODUCER GAS-FIRED BOILING PAN (EHRHARDT & SEHMER).

Fig. 347 serves as an example to show how hot producer gas may be applied for heating a boiling or concentrating pan in a chemical works. To avoid the "cutting" action of the gas-flame on the base a perforated deflecting brick arch

FIG. 348.—PRODUCER GAS-FIRED DRYING STOVE FOR CYCLE FRAMES (DEUTZ).

is provided between the burner mouth and the pot base. In other types the path of the hot gases is sometimes made to take a circular passage round the pot.

Fig. 348 shows a *drying stove* for cycle frames heated by producer gas. The

gas may be burnt directly in the stove or in radiators, depending upon the specific property of the enamel or paint used.

Fig. 349 shows by way of example the various small heating purposes to which producer gas previously purified from hydrogen sulphide (where necessary) can be employed. When producer gas is burnt in open flames in working rooms where a large number of people are employed, it is always advisable to remove the main bulk of the sulphuretted hydrogen in the gas, or to use fuels, say certain anthracites, which are low in sulphur content.

It will have been noticed that for the various applications illustrated in figs. 335 to 349, sometimes hot crude gas and sometimes cold producer gas have been employed. For most of the purposes either type of gas can be employed efficiently

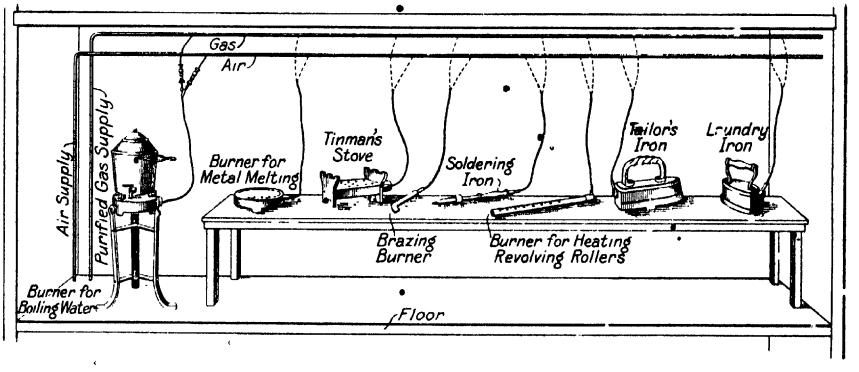

FIG. 349.—SUNDRY SMALL APPLICATIONS OF PRODUCER GAS (NATIONAL G. E. COY.).

if the furnace is designed accordingly, but which system will be the most economical in operation depends entirely upon the operating conditions of the particular works in question.

Thus where a few furnaces of small capacity exist in which the furnace-man can also attend to the producer, a semi-gas-fired furnace is probably a good investment. On the other hand, where large fuel quantities have to be gasified for a certain number of furnaces, or heavy work is required of the furnace-man, it is probably advantageous to employ a central gas producer plant.

Where a large number of small furnaces are to be heated, and where minute temperature control is essential, cold cleaned producer gas is always likely to be the most suitable.

DIRECTOR OF INDUSTRIES.
LIBRARY.
2 JAN 1924

CHAPTER X

COMPARISON OF UTILIZATION EFFICIENCY OF VARIOUS GASES IN FURNACES

SINCE the degree of efficiency of most gas-fired furnaces mainly depends upon the method of application, a general survey only of gaseous combustion from a thermal point of view can be given.

The following are the main factors to be considered when a systematic comparison between the utility of various types of producer gas and other industrial gases is to be made :—

I. The composition and properties of the gas and its components.
II. The composition and properties of the products of combustion.
III. The temperature of combustion of the gas in the furnace.
IV. The temperature of the products of combustion leaving the furnace ; or the heat retained in the furnace proper.

I. COMBUSTIBLE GASES

In Table 77 the main properties are given of the usual combustible components of industrial gases. The properties given in this table have as far as possible been based upon figures obtained by well-known scientists ; but as some of the results of these various original researches differ slightly, the actual figures represent an average of those results which seem to have been most accurately determined.

The points which have mainly to be considered by the furnace user are not so much the heating value per unit of volume of gas as—

(*a*) The velocity of burning (flame propagation) of the combustible mixture.
(*b*) The concentration of combustible gas particles per unit volume of mixed gas and air previous to combustion, since the distance between combustible gas and oxygen particles will determine the rate of combustion.
(*c*) The concentration of heat referred to a unit volume of the products of combustion, *i.e.* the thermic potential of the products of combustion.
(*d*) The theoretical temperature of combustion when burnt with air, which is directly proportional to the thermic potential of the products of combustion.

TABLE 77

Name of Gas.	Calorific Value at Constant Pressure at N.T.P.				Theoretical Amount of Air required for Combustion			Thermic Potential of Theoretical Gas and Air Mixture at N.T.P. net Values.		Thermic Potential of Products of Combustion from Theoretical Gas and Air Mixture at N.T.P. net Values.		Theoretical Flame Temperature °C. for Ideal Conditions of Combustion.	Ignition Point in Free Air. °C.	Max. Velocity of Flame Propagation in Theoretical Gas and Air Mixture in Tube 2·5 cms. Diameter. Metres/sec.	Relative Radiation per litre of Gas (Non-luminous Flame).
	Gross		Net												
	Cals./m.³	B.T.U./ft.³	Cals./m.³	B.T.U./ft.³	Volume per Unit Volume of Gas	Cub. Metres per 1000 cals. (net) in Gas	Cub. ft. per 100 B.T.U. (net) in Gas	Cals./m.³	B.T.U./ft.³	Cals./m.³	B.T.U./ft.³				
Carbon monoxide	3045	342	3045	342	2·38	0·782	0·696	901	101·24	1050	117·93	2430	644-658	0·90	177
Hydrogen	3063	344	2580	290	2·38	0·922	0·820	763	85·8	890	100	2217	580-590	4·25	74
Methane	9460	1063	8500	955	9·52	1·12	0·997	808	90·8	801·9	90·1	2035	650-750	0·67	327
Ethylene	14960	1681	14000	1573	14·28	1·02	0·908	916	102·94	909·1	102·1	2265	542-547	..	510
Benzene (vapour)	35375	3975	34000	3820	35·7	1·05	0·935	927	104·1	906·7	101·9	2265	..	..	..

From this table it should be noticed that carbon monoxide shows the highest concentration of heat (thermic potential) per unit volume of its products of combustion; hence at the same exit temperature from a furnace its products of combustion will contain a smaller fraction of the potential heat than in the case of any of the other gases.

Hydrogen burns with the highest flame velocity, consequently where quick burning and high initial temperature are required a high content of hydrogen in the gas is an advantage; but carbon monoxide and methane, due to their slower combustion rates, are more suitable where even heating throughout the whole of the furnace space is required.

II. PRODUCTS OF COMBUSTION

In Table 78 Neumann's[1] complete figures for the mean specific heat at constant pressure per unit volume at N.T.P. of various products of combustion are given.

The specific heat values given for water vapour and carbon dioxide are not the apparent ones for temperatures above 1600° to 1800° C. due to the increasing dissociation of these two gases with rise in temperature. However, the employment of such or higher temperatures in gas-firing practice is extremely exceptional.

The total heat lost in the products of combustion varies not only with their final temperature, but also with their content of incompletely burnt gas or oxygen (excess air). Incompletely burnt gas in the products indicates a far higher thermal loss than the same quantity of oxygen, and hence such a result should be avoided where practicable.

It can be taken as a general rule that theoretically complete combustion without excess air is not attainable even if gas of constant composition can be relied upon and the heat requirement of the furnace remains constant. It is, however, possible to approach this condition far more closely with gas firing than when burning solid fuel, due to the great ease wherewith the relative air and gas volumes can be regulated and controlled.

For equally efficient applications of the various gases the minimum quantity of excess air required decreases inversely with the volumetric concentration of the gas particles in the combustible mixture of air and gas previous to or after the point of ignition, and *with the average temperature existing until combustion is completed.* This average temperature is dependent both upon the velocity of combustion and the "theoretical" flame temperature. The latter is generally termed "thermal intensity," which would appear to be a misnomer, since the intensity of the combustion is a function both of the maximum temperature theoretically obtainable and the velocity of flame propagation (or flame velocity).

If oxygen or air enriched in its oxygen content were a commercial article in regard to general furnace work, it will be clear that the heat lost in the products

[1] Neumann, *Z. f. a. Chem.*, May 13, 1919.

TABLE 78

MEAN SPECIFIC HEAT AT CONSTANT PRESSURE PER CUB. M. GAS AT N.T.P. BETWEEN 0° C. AND T° C.

Temperature T° C.	CO_2 and SO_2	H_2O	O_2, N_2, Air, and CO
0	0·397	0·372	0·312
100	0·410	0·373	0·314
200	0·426	0·375	0·316
300	0·442	0·376	0·318
400	0·456	0·378	0·320
500	0·467	0·380	0·322
600	0·477	0·383	0·324
700	0·487	0·385	0·326
800	0·497	0·389	0·328
900	0·505	0·394	0·330
1000	0·511	0·398	0·332
1100	0·517	0·402	0·334
1200	0·521	0·407	0·336
1300	0·526	0·413	0·338
1400	0·530	0·418	0·340
1500	0·536	0·424	0·342
1600	0·541	0·430	0·344
1700	0·546	0·438	0·346
1800	0·550	0·446	0·348
1900	0·554	0·455	0·350
2000	0·556	0·465	0·352
2100	0·558	0·475	0·354
2200	0·562	0·485	0·356
2300	0·566	0·495	0·358
2400	0·568	0·505	0·360
2500	0·570	0·516	0·362
2600	0·572	0·527	0·364
2700	0·574	0·538	0·366
2800	0·577	0·549	0·368
2900	0·579	0·561	0·370
3000	0·581	0·573	0·372

of combustion from any furnace would be less than when ordinary air is used, due to the decreased nitrogen content.

III. TEMPERATURES OF COMBUSTION

That the flame temperature obtained in practice is generally not very close to the theoretical temperature of combustion is due to one or more of the following factors :—

1. The flame radiates heat to furnace walls and through any open doors.
2. There is always excess air or combustible gas present in the products of combustion.
3. Dissociation of products of combustion takes place at high temperatures.
4. Combustion requires a certain time for completion.
5. Damage would occur to furnace walls and goods at high temperatures.

If the highest possible temperature is to be obtained, the following rules should be observed :—

1. Have well insulated furnace walls and open doors as little as possible.
2. Maintain as little excess air as possible.
3. Burn as much gas as possible. So long as more gas is burnt than that which corresponds to the heat loss by radiation and in waste gases, the temperature will increase.
4. Pre-heat gas or air or both previous to combustion.
5. Increase the thermal intensity of the flame (*a*) by burning gas or air or both under pressure and/or (*b*) by careful intermixing of air and gas previous to combustion.

NOTE.—By taking care of these points the author has personally succeeded by means of an open blow-pipe producer gas flame, using cold air and cold gas, in causing a 1530° C. Seger cone to collapse after a five-minute period.

The "theoretical" flame temperature is that temperature at which the thermal capacity (or total heat) of the products of combustion is equal to the net potential heat contained in the gas volume from which they were derived.

Having once calculated the respective volumes of each of the three kinds of products of combustion (CO_2, H_2O, and diatomic gases) per unit volume of combustible gas, the sum total of the thermal capacity of each of these for one or two assumed temperatures will enable the theoretical flame temperature to be arrived at by extrapolation.

Estimation of the theoretical flame temperature in this way is a somewhat cumbersome process, to lighten which the two curves (figs. 350 and 351) have been prepared.

The N.T.P. volumes of CO_2, H_2O, and N_2 (diatomic gases) are plotted as abscissae,

while the thermal capacities (*i.e.* the sensible heat given off) between the various temperatures and 0° C. are plotted as ordinates. For instance, 3 cub. m. of nitrogen

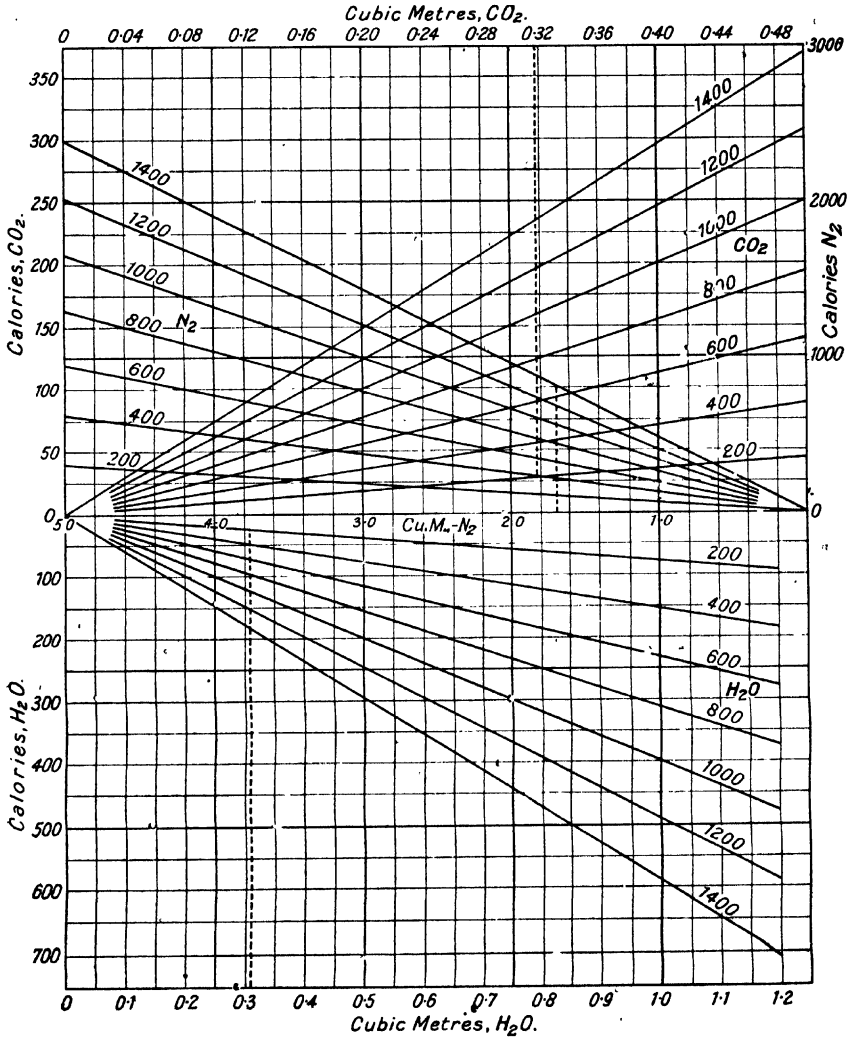

FIG. 350.—THERMAL CAPACITY OF GASES BETWEEN 200° C. AND 1400° C.

at 1400° C. has a thermal capacity of 1440 calories, 0·75 cub. m. of water vapour at 1200° C. has a thermal capacity of 370 calories, and 0·4 cub. m. of CO_2 at 2400° C has a thermal capacity of 545 calories.

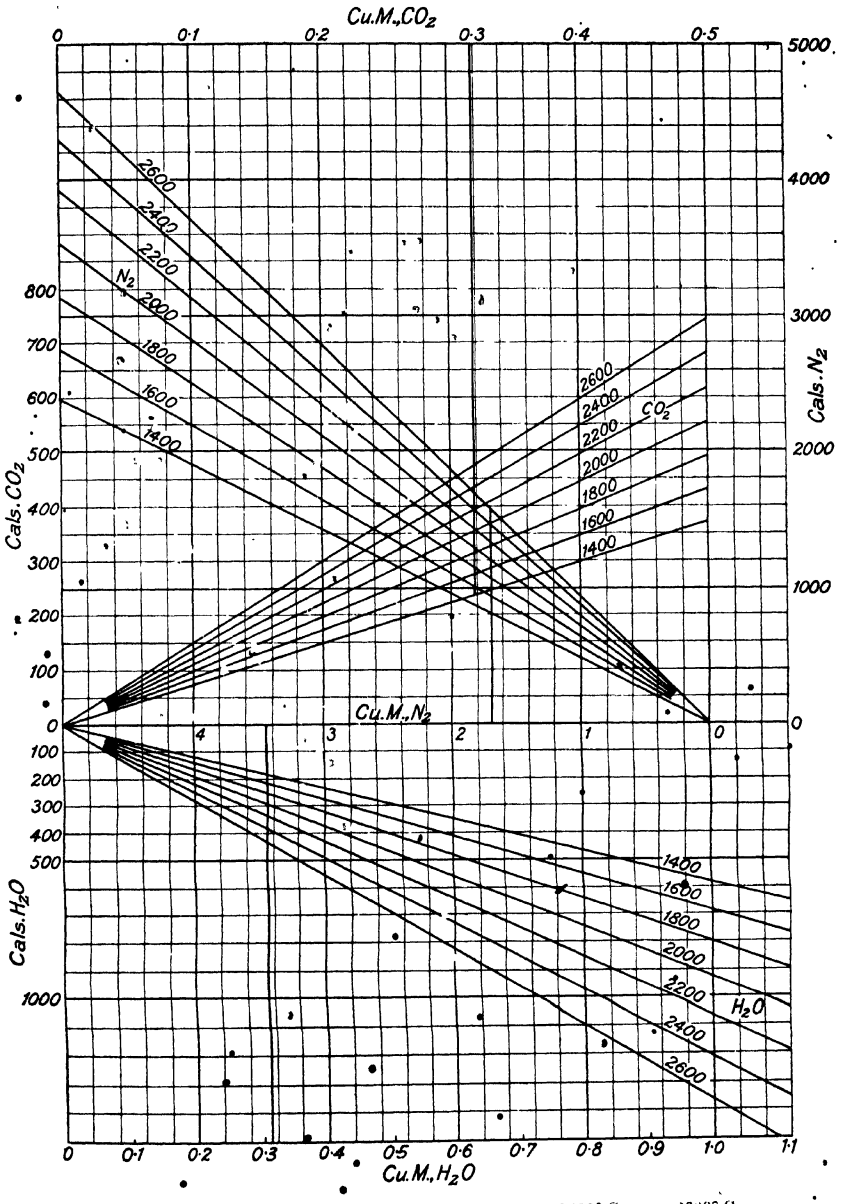

FIG. 351.—THERMAL CAPACITY OF GASES BETWEEN 1400° C. AND 2600° C.

IV. TEMPERATURE OF EXIT GASES

When burning the same quantity of gas and air per unit of time in the same furnace, it will be clear that the lower the exit temperature of the products of combustion leaving the furnace the higher will be the furnace efficiency; but that the exit temperature will be lower the higher the initial temperature is not directly obvious. This, however, is due to the fact that the rate of heat transfer to the goods, generally speaking, will be proportionate to the mean temperature difference between the hot gases and the goods.

The curves on fig. 352 serve to illustrate the latter point more clearly in a diagrammatic way, temperature as ordinate being plotted against time as abscissae. Curve a-b shows the cooling curve for gas burnt with the theoretically best degree of intensity, *i.e.* if the theoretical flame temperature were obtained. Curve c_1-c-c_2 shows the cooling curve when a practical degree of intensity or quickness of burning is obtained, and curve d_1-d-d_2 when the gas is slowly burnt, the horizontal lines c_1-c and d_1-d indicating the respective lengths of time for completed combustion. In cases C and D the analysis of the products of combustion may be identical, yet the outlet temperature will be lower in case C than case D, because the mean temperature difference would be larger and hence the heat transfer would be quicker. Thus we get the rule that an increase in the initial temperature of combustion has a cumulative effect upon the thermal efficiency of the furnace.

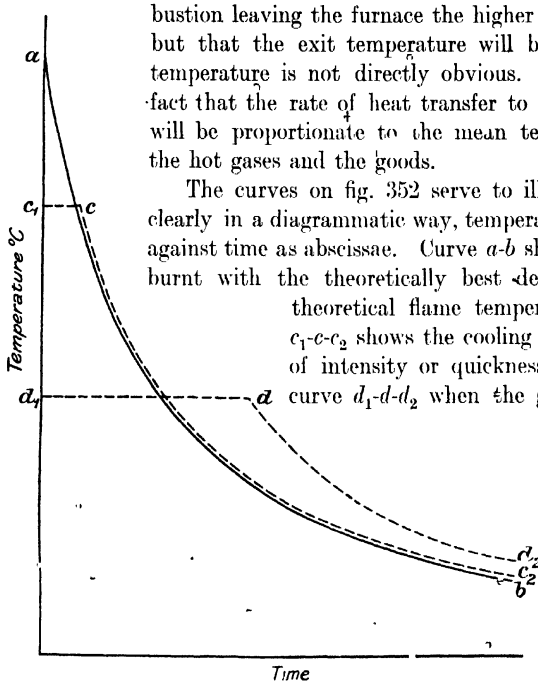

FIG. 352.—COOLING CURVES FOR GASES AT VARIOUS INITIAL TEMPERATURES.

COMPARISON BETWEEN THE COMBUSTION OF VARIOUS INDUSTRIAL GASES

Having now outlined the factors to be considered when a certain gas is to be employed for furnace heating, examples will be given of the combustion of nine different gases, of which six are various producer gases, while the three others are chosen as typical examples of the other three main industrial gases, viz. :—

(1) *Blast furnace gas.*

(2) *Producer gases.*

(*a*) Coke breeze producer gas
(*b*) Anthracite producer gas
(*c*) Bituminous coal producer gas } without by-product recovery.

(*d*) Mond producer gas
(*e*) Semi-Mond producer gas
(*f*) Low temperature producer gas } with by-product recovery.

(3) *Blue water gas.*

(4) *Distillation gas*, such as is made in gas works retorts or in coke ovens.

The comparison between these various gases assumes that all are cold when supplied to the furnace, while a separate study will be made of the effect of preheating air or gas and of varying moisture content upon the furnace efficiency of the three producer gases :—

(2*c*) Bituminous coal without recovery.
(2*d*) ,, ,, Mond recovery.
(2*f*) ,, ,, low temperature recovery.

TABLE 79

COMPOSITION OF VARIOUS INDUSTRIAL GASES

Type of Gas.	Analysis of Gas assumed Dry at N.T.P.						Per cent of Inerts.	Net Heating Value of Gas at N.T.P.	
	CO_2	CO	CH_4	C_2H_4	H_2	N_2		Cals. M.³	B.T.U. Ft.³
(1) Blast furnace gas . .	10	27·5	·5	..	3	59	69	957	107·5
(2*a*) Coke breeze producer gas.	7	24·5	1·1	..	11·0	56·4	63·4	1123·2	126·2
(2*b*) Anthracite ,, ,, .	7·5	24·0	1·2	..	16·5	50·8	58·3	1258·5	141·4
(2*c*) Bituminous ,, ,, .	4·5	27·0	3·0	..	13·0	51·5	56·0	1412·3	158·7
(2*d*) Mond recovery ,, ,, .	16	11·0	2·7	..	25	45·3	61·3	1208	135·9
(2*e*) Semi-Mond ,, ,, .	11	17·5	3·3	..	21·5	46·7	57·7	1367·9	153·7
(2*f*) Low temp. ,, ,, .	8·3	20·5	5·5	..	20·5	44·9	53·2	1622·4	182·3
(3) Blue water ,, ,, .	5	39·5	·5	..	49	6	11	2520	282
(4) Towns' or coke oven gas .	2·5	12	26	2·5	48	9	11·5	4163	467·8

Table 79 contains the volumetric analysis and heating value of the nine gases dry at 0° C. and 760 mm. mercury (N.T.P.) as commonly expressed. It should be noted that for all the following calculations it has been assumed that 100 volumes of dry gas contain an additional 1·5 volumes of water vapour (*i.e.* is saturated at 13° C.), and that 100 volumes of dry air used for combustion contain 21 volumes oxygen and 79 volumes of nitrogen, plus an additional 1·0 volume of water vapour.

Table 80 covers the ideal or theoretical case of gaseous combustion of the various

TABLE 80

THEORETICAL COMBUSTION CONDITIONS

(All volumes are in M.³ (reduced to N.T.P.) per M.³ dry gas at N.T.P.)

Type of Gas.	Total Volume of Gas and Air previous to Combustion.	Total Volume of Products of Combustion.	Partial Volumes of Products of Combustion.			Volumetric Composition of Dry Products of Combustion in per cent.		Theoretical Flame Temperature in ° C.	Thermic Potential Cals./M.³ Products of Combustion	Percentage of Total Heat retained in Furnace as Useful Work and Furnace Losses at various Flue Exit Temperatures.					
			CO_2	N_2	H_2O	CO_2	N_2			1200° C.	1000° C.	800° C.	600° C.	400° C.	200° C.
(1) Blast furnace gas	1·797	1·645	·38	1·202	·063	24	76	1498	582	21	35·3	50	62·7	75·7	88·2
(2a) Coke breeze producer gas	1·975	1·797	·326	1·314	·157	19·9	80·1	1613	625	27·8	40·5	53·2	65·7	77·5	89·0
(2b) Anthracite ,, ,,	2·105	1·903	·327	1·362	·214	19·35	80·65	1693	661	31·7	43·9	55·9	67·6	78·8	89·6
(2c) Bituminous ,, ,,	2·265	2·055	·345	1·493	·217	18·77	81·23	1738	687	34·5	46·3	57·9	68·9	79·5	90·0
(2d) Mond recovery ,, ,,	2·140	1·96	·297	1·333	·33	18·2	81·8	1588	616	26·8	40·0	52·8	65·2	77·2	88·8
(2e) Semi-Mond ,, ,,	2·267	2·073	·318	1·447	·308	18·0	82·0	1697	660	31·8	44·2	56	67·6	78·9	89·7
(2f) Low temp. ,, ,,	2·53	2·322	·343	1·634	·345	17·35	82·65	1775	698	35·7	47·2	58·3	69·3	79·8	90·3
(3) Blue water gas	3·19	2·748	·45	1·763	·535	20·3	79·7	2269	917	50·3	59·2	67·9	76·4	84·5	92·4
(4) Towns' or coke oven gas	5·317	5·017	·455	3·455	1·107	11·6	88·4	2073	830	46·9	56·4	65·6	74·6	83·4	91·8

gases when no excess air or combustible gas is present in the products of combustion. Among other figures the table also contains the volumetric analysis of the dry flue gases, the theoretical flame temperatures, and the furnace efficiencies for various flue exit temperatures.

As already explained, ideal combustion cannot be achieved and maintained in practice. To obtain a fair comparison between the utilization efficiency of the various gases in practice under equally efficient methods of application it has been assumed that the products of combustion from producer gas (2*b*) and (2*e*) contain 2·5 per cent of oxygen on the *dry* flue gas analysis (which should be easily obtainable in most furnaces).

NOTE.—It should here be mentioned that the content of water vapour in the *wet* flue gas is practically impossible to record by the ordinary methods of gas analysis, due care of which must be taken when the composition and heat content of an actual flue gas is estimated from a given analysis, which only records the percentage concentration of the dry flue gas components.

TABLE 81

Type of Gas.	Total Volume of Dry Air required for Theoretical Combustion.	Total Volume of Gas and Air previous to Combustion.	Total Volume of Combustible Gas in Gas and Air Mixture in M.³.	Volumetric Concentration of Combustible Gas in Mixture.	Approximate Flame Temperature °C.	Volumetric Percentage of Oxygen assumed Essential in Dry Products of Combustion for Equivalent Conditions of Practical Combustion.
				Per cent		
(1) Blast furnace gas . .	·774	1·797	·31	17·5	1500	4
(2*a*) Coke breeze producer gas.	·95	1·975	·366	18·5	1615	3
(*b*) Anthracite ,, ,, .	1·08	2·165	·417	20	1700	2·5
(2*c*) Bituminous ,, ,, .	1·21	2·237	·430	19·2	1760	2·5
(2*d*) Mond recovery ,, ,, .	1·114	2·140	·387	18·1	1590	3
(2*e*) Semi-Mond ,, ,, .	1·24	2·265	·423	18·9	1700	2·5
(2*f*) Low temp. ,, ,, .	1·5	2·58	·465	18·0	1775	3
(3) Blue water gas . . .	2·155	3·19	·89	28·2	2200	1·5
(4) Towns' or coke oven gas .	4·26	5·317	·885	16·8	2075	3·5

Table 81 has been prepared to show the basis upon which the excess oxygen content of the products of combustion from the various gases has been assessed.

The assessment of the following oxygen content in the flue gases—

From water gas	. . . .	1·5 per cent O_2,
,, producer gas	. .	2·5 to 3 per cent O_2,
,, distillation gas	. . .	3·5 ,, ,,
,, blast furnace gas	. .	4 ,, ,,

has been made on account of the following facts.

(1) The volumetric concentration of the combustible gases in the theoretical air and gas mixture previous to combustion decreases in the order: water gas—producer gas—blast furnace gas—distillation gas.

(2) The theoretical flame temperature decreases in the order: water gas—distillation gas—producer gas—blast furnace gas.

The result of practical combustion conditions is shown in Table 82.

It is with the results given in this table that we are mainly concerned.

The first three columns refer to the air volume required per cub. m. of dry gas (N.T.P.), the total volume of gas and air previous to combustion, and the quantity of products of combustion; the volumes given here are required for pipe, nozzle, and flue dimensions.

The following three columns which give the "partial volumes" of the products of combustion are required for any calculation regarding heat abstracted from or contained in the flue gases at a given temperature.

The results given in the three columns concerning the volumetric composition of the *dry* flue gases are useful for comparison with any flue gas analysis that may be made from time to time. It should be noticed that for distillation gas the CO_2 content is very much lower than in the case of the other gases, which nearly all show the same CO_2 content.

The dew-point column shows at what temperature the products of combustion will start to condense out moisture; obviously distillation gas is the "wettest."

The theoretical flame temperature and the thermic potential columns (which really are synonymous terms) indicate the relative suitability of the various gases when supplied cold for high temperature furnace work.

The last six columns show how much heat has been abstracted from the products of combustion when these leave the furnace at the temperatures given.

When, therefore, the flue gas exit temperature (*i.e.* minimum furnace temperature) from a furnace is given, the figures in these columns express the *furnace efficiency*.

By such furnace efficiency is not meant the ratio between heat required to be transmitted to the furnace goods and that in the gas, but the ratio between the heat retained in the furnace and the total heat available. This method of comparison is preferable, because the only heat quantity capable of definite control and simple estimation is the heat carried away by the products of combustion, while the relative amounts of heat represented by useful work and radiation losses

TABLE 82

COMPARATIVE PRACTICAL CONDITIONS OF COMBUSTION

(All volumes are in M.³ (reduced to N.T.P.) per M.³ dry gas at N.T.P.)

Type of Gas.	Volume of Air required for Proper Combustion.	Total Volume of Gas and Air previous to Combustion.	Total Volume of Products of Combustion.	Partial Volumes of Products of Combustion.				Volumetric Composition of "Dry" Products of Combustion in per cent.			Dew Point ° C. of "Wet" Products of Combustion.	Theoretical Flame Temperature in ° C.	Thermic Potential Cals./M.³ of Products of Combustion	Percentage of Total Heat retained in Furnace as Useful Work and Furnace Losses at various Flue Exit Temperatures.					
				CO_2	N_2	O_2	H_2O	CO_2	O_2	N_2				1200 ° C.	1000 ° C.	800 ° C.	600 ° C.	400 ° C.	200 ° C.
Blast furnace gas	1·158	2·173	2·021	·38	1·575	·066		19·4	4·0	76·6	26	1266	474	5·5	22·3	38·8	55	70·6	85·7
Coke breeze producer gas	1·222	2·247	2·07	326	1·584	·160		17·05	3·0	79·95	41	1438	544	17·9	32·5	47·0	61·1	74·6	87·5
Anthracite ,, ,,	1·321	2·336	2·133	·327	1·590	·216		17·0	2·5	80·5	47	1547	590	24·2	37·8	51·2	64	76·4	88·5
Bituminous ,, ,,	1·501	2·516	2·305	·345	1·741	·219		16·5	2·5	81·0	45·5	1604	614	27·4	40·4	53·0	65·4	77·1	89·0
Mond recovery ,, ,,	1·400	2·415	2·235	·297	1·605	·333		15·6	3·0	81·4	54	1430	540	17·5	32·3	46·8	60·9	74·4	87·4
Semi-Mond ,, ,,	1·495	2·510	2·316	·318	1·687	·311		15·9	2·5	81·6	52	1548	590	24·5	38·2	51·3	64·1	76·6	88·6
Low temp. ,, ,,	1·848	2·863	2·655	·343	1·964	·348		14·85	3·0	82·15	52	1606	613	27·4	40·4	53·0	65·4	77·1	89·0
Blue water gas	2·348	3·363	2·92	·45	1·932	·538		18·9	1·5	79·6	58·5	2115	864	47·5	56·8	66·1	75	83·7	92·0
Towns' or coke oven gas	5·09	6·105	5·805	·455	4·235	1·115		9·7	3·5	86·8	59·5	1864	717	39·2	49·9	60·7	71	81	90·7

(*i.e.* the total heat retained in the furnace) are very difficult of estimation and control.

From Table 82 we can further lay down the quantity of cold producer gas which is required to do the equivalent work of the three other industrial gases when burnt with cold air.

Seeing that the different producer gases vary considerably in utilization efficiency (for high exit temperatures), in comparing producer gas in a general way with the three other gases, we shall assume as an average case of producer gas that made from anthracite (141·4 B.T.U. per cub. ft.), or the semi-Mond gas (153·7 B.T.U. per cub. ft.), both of which have the same utilization efficiencies, in spite of their widely divergent composition.

	Increase or Decrease in the Number of Therms required in Producer Gas to do the Equivalent Work in the Furnace		
Flue gas temperatures . . .	800° C.	400° C.	200° C.
Blast furnace gas	24·2% less	7·3% less	3·5 % less
Blue water gas	28·2% more	9·3% more	3·81% more
Distillation gas	18·3% more	6·4% more	2·4 % more

It is clear from the above that for low outlet temperatures (say drying stoves, boilers, and water heaters) *producer gas is as thermally efficient as the richer gases* water gas and town gas, while for high temperature work (where the flue gases leave above 600° to 800° C.) cold producer gas is not quite as thermally efficient as the rich gases. On the other hand, it should not be overlooked that the cost of production of cold clean producer gas is generally less than that of either towns' gas or water gas, so that the extra expenditure of therms in the furnace may be counterbalanced by the smaller cost of the producer gas and the higher thermal efficiency of the producer gas plant.

Fig. 353 shows a series of curves for the various industrial gases which indicate the furnace efficiency for different flue gas temperatures. It also contains one curve showing the influence of pre-heating producer gas (2*b* and 2*e*) and air to 400° C. below that of the flue gas temperature. Seeing that the curves cover practically the whole range of industrial gases available in this country, it will form a handy and quick reference for those who are concerned with the choice of a suitable gas for heat treatment.

With the further object of enabling the comparison between such other gases as may be available for the use of any particular works to be quickly made on similar lines, the detailed calculations in regard to the figures given in Tables 80 and 82 for semi-Mond gas are given below.

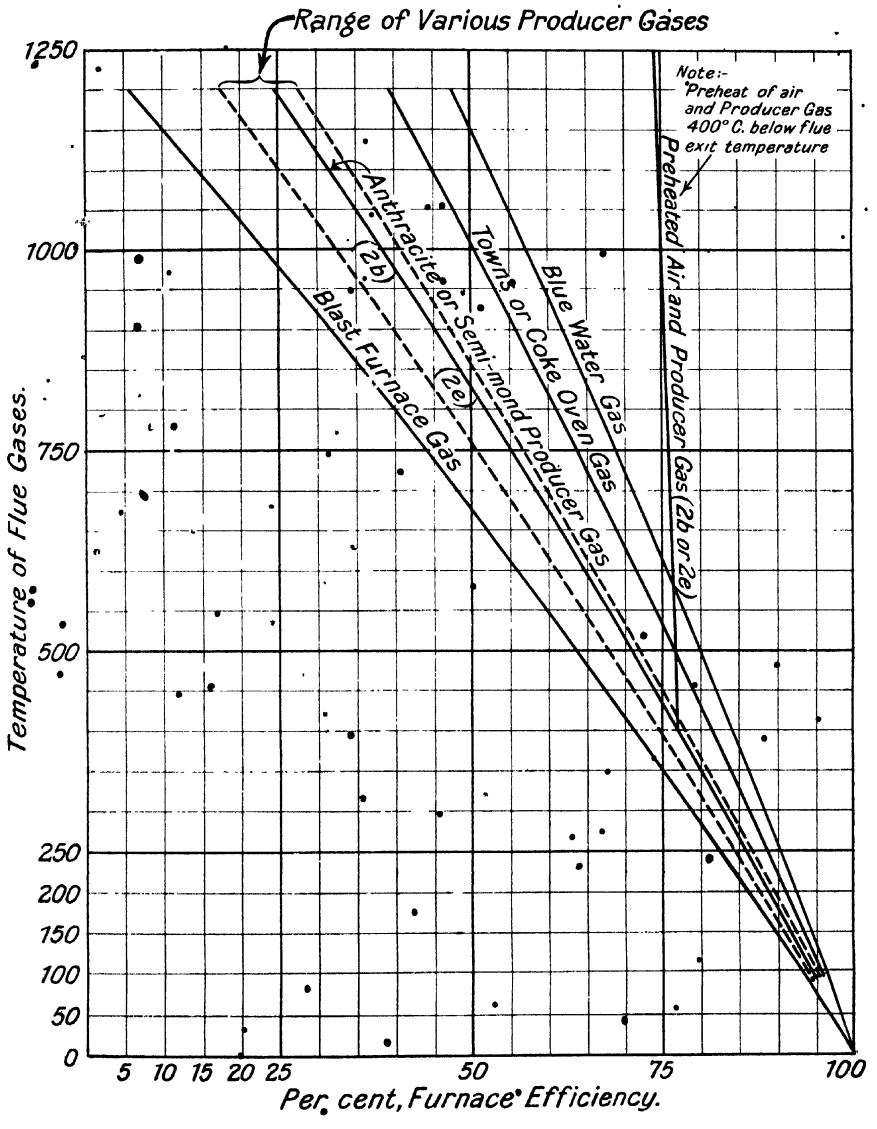

FIG. 353.—FURNACE UTILIZATION EFFICIENCIES OF VARIOUS INDUSTRIAL GASES.

Details of Thermal Calculations for the Combustion of Semi-Mond Producer Gas

Gas Analysis (Dry).		Air Analysis.	
CO_2	11 per cent.	O_2	21 per cent.
CO	17·5 ,,	N_2	79 ,,
CH_4	3·3 ,,		
H_2	21·5 ,,	Dry air	= 100 ,,
N_2	46·7 ,,	H_2O	1 ,,

Net heating value Dry gas at N.T.P. { 1368 cals./m.³ / 154 B.T.U./ft.³

Moisture content in gas—1 5 per cent.

Note.—All the following calculations refer to quantities per m.³ of dry gas at N.T.P

Calculation of Quantities (all reduced to N.T.P.) and Analysis of the various Products of Combustion for Theoretical Burning Conditions. By-product Producer Gas

Constituent of Gas.	M.³ of each Constituent per M.³ Gas at N.T.P.	Minimum Amount of O_2 required in M.³ (N.T.P.)	Products of Combustions in M.³ per M.³ Gas at N.T.P. CO_2	H_2O	N_2
CO_2	0·11	..	0·11	..	..
CO	0·175	0·0875	0·175	..	..
CH_4	0·033	0·066	0·033	0·066	..
H_2	0·215	0·1075	..	0·215	..
N_2	0·467	..	..	..	0·467
H_2O	0·015	..	..	0·015	..
Total		0·261	**0·318**	..	..
Min. dry air required for combustion	$= \frac{0·261}{0·21} = 1·24$ carrying			0·0124	·98
Total				**0·3084**	**1·447**

Summary. Constituent of Products of Combustion.	Volume in M.³ per M.³ Dry Gas at N.T.P.	Volumetric Composition of Products of Combustion Wet	Dry.
CO_2	0·318	15·3%	18·0%
N_2	1·447	69·8%	82·0%
Total dry	**1·765**	..	..
H_2O	·3084	14·9%	..
Total wet	**2·073**	..	..

Volume of dry air = 1·24 m.³
,, ,, wet ,, 1·252 m.³

Practical Conditions.

Calculation of volumetric composition of flue gases when the dry gas analysis is to show 2·5% oxygen.

Total quantity of dry products for theoretical combustion = 1·765 m.³

2·5% excess oxygen correspond to $\frac{2·5}{21}$ = 11·9% excess air.

∴ 1·765 m.³ will be 88·1% of total volume of products of combustion.

Or this volume = $\frac{1·765 \times 100}{88·1}$ = 2·005 m.³

Less CO_2	·318 ,,
Total $N_2 + O_2$	1·687 ,,
Less original N_2	= 1·447 ,,
Total excess air	·240 ,,
Carrying	0·0024 m.³ H_2O.
Add	0·3084 ,, ,,
Total	0·3108 m.³ H_2O.

Summary.	M.³	Per cent Dry.
CO_2	·318	15·87
N_2	1·637	81·63
O_2	·05	2·5
Total	2·005	..
H_2O	0·311	..
..	2·316	..

Total dry air = 1·48 m.³
Total wet air = 1·495 m.³
(at N.T.P.)

CALCULATION OF THEORETICAL FLAME TEMPERATURE AND FURNACE EFFICIENCY FOR PRACTICAL CONDITIONS OF BURNING—*continued*

Heat in Flue Gases (see *Ordinates on figs.* 350 *and* 351)

	Temperature ° C.										
	2200	2000	1800	1600	1400	1200	1000	800	600	400	200
·318 m.³ CO_2	392	353	315	275	236	199	162	126	91	58	27
1·687 m.³ $N_2 + O_2$	1330	1195	1060	930	805	680	560	443	328	216	106
·311 m.³ H_2O	332	290	250	214	182	152	123	97	72	46	23
Total cals.	2054	1838	1625	1419	1223	1031	845	666	491	320	156
Per cent of calorific value	..	..	..	..	89·6	75·5	61·8	48·7	35·9	23·4	11·4

$$\text{Flame temperature} = 1400^\circ \text{ C.} + 200 \times \frac{1368 - 1223}{1419 - 1223} = \mathbf{1548}^\circ \text{ C.}$$

EFFECT OF HEATING AIR AND GAS PREVIOUS TO COMBUSTION

Total heat in 1·495 m.³ of air in cals. per m.³ dry gas at N.T.P. if pre-heated to

1000	800	600	400	200° C.
496	392	291	191	92 cals.

Total heat in 1·015 m.³ gas in cals. per m.³ dry gas at N.T.P. if pre-heated to

1000	800	600	400	200° C.
366	288	212	139	68 cals.

THEORETICAL FLAME TEMPERATURE IF GAS PRE-HEATED TO 400° C. AND AIR TO 600° C.

Potential heat in gas . . .	1368 cals.
Sensible „ „ . . .	139 „
„ „ air . . .	291 „
	1798 cals.

Total heat in products of combustion at 1800° C. 1617 cals.
„ „ „ „ 2000° C. 1822 „

$$t = 1800 + 200 \times \frac{181}{205} = \mathbf{1976}^\circ \text{ C.}$$

In addition to the furnace outlet temperature and the excess air in the flue gases, the furnace utilization efficiency of a producer gas of a given analysis alters with the moisture content of the gas and the degree of pre-heating of the gas and air previous to combustion.

The effect of varying *moisture content* in the gas upon the "theoretical flame temperature" is very visible from the following figures :—

Moisture Content in Gas Grammes per cub. m. Gas Dry at N.T.P.	Saturation Temperature of Gas ° C.	Theoretical Flame Temperatures for Practical Conditions of Combustion as per Table 82.					
		Producer Gas without Recovery.			Producer Gas with Recovery.		
		Coke Breeze.	Anthracite.	Bituminous.	Mond.	Semi-Mond.	Low Temp.
11·97	13	1438	1547	1604	1430	1548	1606
34·80	30	1428	1537	1594	1420	1538	1598
83·38	45	1400	1504	1561	1396	1509	1568
196·02	60	1326	1430	1487	1329	1439	1502
356·41	70	1239	1336	1394	1246	1352	1422

Obviously the drier the gas the better will be the furnace efficiency, but so long as the moisture content does not exceed 35 to 40 grammes per cub. m. it will have no appreciable effect upon the efficiency.

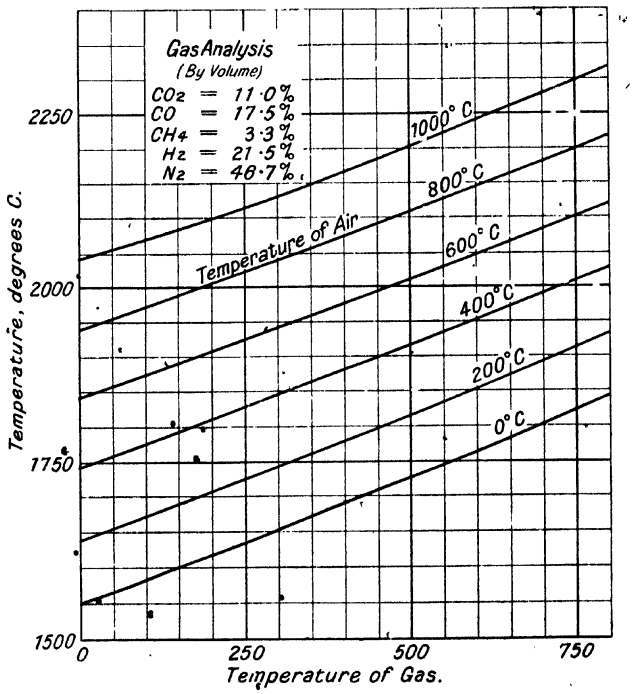

FIG. 354.—EFFECT OF PRE-HEATING OF GAS AND AIR UPON FLAME TEMPERATURES.

The effect of *pre-heating* both air and gas to the same temperature is indicated by the "vertical curve" on fig. 353. Since flue gas exit temperatures of about 300° C. are required if a good chimney draught is to be maintained, it is clear that

pre-heating of the gas and air does not pay for furnaces having exit temperatures below, say, 400° C. Further, as it is not economical to pre-heat the air and gas close to the flue exit temperatures, the pre-heating curve has been drawn upon the assumption that both the air and the gas are pre-heated to a temperature 400° C. below that of the flue exit temperature. Where the pre-heating curve intersects the

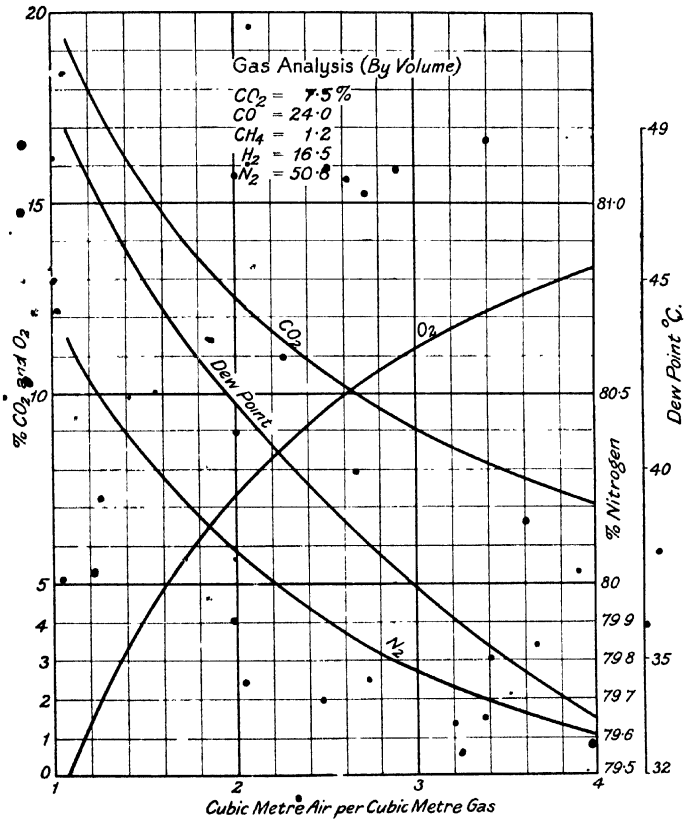

FIG. 355.—FLUE GAS COMPOSITION CURVES.

efficiency curves for cold water gas or towns' gas, we have the required amount of pre-heating needed to make producer gas equally efficient to these two gases. Thus, at a furnace exit temperature of 580° C. (*i.e.* the producer gas and air being pre-heated 180° C.) producer gas will have the same thermal utilization efficiency as blue water gas without pre-heat.

To show the effect upon the theoretical flame temperature of varying degrees of pre-heating of either air or producer gas, the curves on fig. 356 have been drawn for semi-Mond gas (or anthracite gas). The ordinates represent the theoretical

flame temperatures, the abscissae indicate the gas temperature, whilst a series of lines indicate the conditions when the air is pre-heated to 200°, 400°, 600°, 800°, and 1000° C. respectively.

To enable proper control of the working of furnaces using a given producer

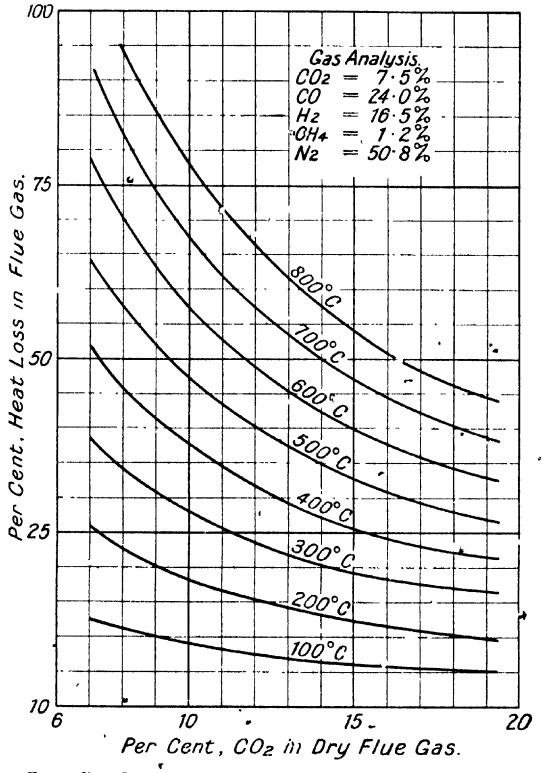

FIG. 356.—FLUE GAS LOSSES FOR VARYING COMPOSITION AND TEMPERATURES.

gas, it is sometimes of advantage to prepare a flue gas composition curve similar to that shown in fig. 355. When the dry flue gas analysis is known, or the CO_2 content is indicated by a recorder, it is at once possible to judge the approximate quantity of excess air used as well as the dew point of the flue gases. If the heat loss in the flue gases is to be obtained for varying flue gas exit temperatures and analyses, the curves shown on fig. 356 will give the result at a glance.

CONVERSION TABLES

TABLE 83

CONVERSION TABLES

LENGTHS

		Logarithm.			Logarithm.
			1 mil.	= 0·001 inch	$\bar{3}$·0000
1 mm.	= 39·37 mils.	1·5951		= 0·0254 mm.	$\bar{2}$·4048
1 cm.	= 0·3937 inch	$\bar{1}$·5951	1 inch	= 2·54 cm.	0·4048
1 metre	= 3·28 feet.	0·5159	1 foot	= 0·3048 metre	$\bar{1}$·4840
1 kilometre	= 1093·6 yards	3·0388	1 yard	= 0·0009 kilometre	$\bar{4}$·9611
1 kilometre	= 0·6214 mile	$\bar{1}$·7933	1 mile	= 1·6093 kilometres	0·2066
				= 1760 yards	3·2455
				= 5280 feet	3·7226

SURFACES

1 sq. mm.	= 1550 sq. mils.	3·1903			
1 sq. cm.	= 0·155 sq. in.	$\bar{1}$·1903	1 sq. inch	= 6·4516 sq. cm.	0·8096
1 sq. metre	= 10·764 sq. ft.	1·0319	1 sq. foot	= 0·0929 sq. metre	$\bar{2}$·9680
1 sq. metre	= 1·196 sq. yds.	0·0777	1 sq. yard	= 0·8361 sq. metre	$\bar{1}$·9222
1 hectare	= 10,000 sq. metres	4·0000	1 acre	4840 sq. yds.	3·6848
1 hectare	= 2·471 acres	0·3929	1 acre	= 0·4047 hectare	$\bar{1}$·6071
1 sq. kilom.	= 0·3861 sq. m.	$\bar{1}$·5867	1 sq. mile	= 2·59 sq. kilom.	0·4133

VOLUMES

			1 gallon	= 8 pints.	
1 cub. cm.	= 0·061 cub. in.	$\bar{2}$·7855	1 cub. inch	= 16·387 cub. cm.	1·2145
1 litre	= 61 cub. in.	1·7855	1 cub. inch	= 0·0164 litre	$\bar{2}$·2145
1 litre	= 1·7598 pints	0·2454	1 pint	= 0·5682 litre	$\bar{1}$·7545
			1 pint	= 20 fluid ounces	1·3010
			1 fluid ounce	28·4 cub. cm.	1·4535
			1 gallon (Br.)	1·2009 gal. (U.S.)	0·0795
			1 gallon (Br.)	= 0·1605 cub. ft.	$\bar{1}$·2055
1 cub. metre	= 220 gallons (Br.)	2·3423	1 gallon (Br.)	0·0045 cub. metre	$\bar{3}$·7742
			1 gallon (Br.)	= 4·5459 litres	0·6576
			1 gallon (U.S.)	= 3·785 litres	0·5781
			1 cub. foot	6·229 gallons (Br.)	0·7944
				= 7·48 gallons (U.S.)	0·8739
1 cub. metre	= 35·31 cub. ft.	1·5479		= 0·0283 cub. metre	$\bar{2}$·4520
1 cub. metre	= 1·3079 cub. yds.	0·1166	1 cub. yard	= 0·7645 cub. metre	$\bar{1}$·8834

WEIGHT AND MASS

			1 pound	= 16 ounces (Av.)	1·2041
1 gramme	= 15·432 grains	1·1884	1 grain	= 0·0648 gramme	$\bar{2}$·8115
			1 pound	= 7000 grains	3·845
1 kilogram	= 2·2046 lbs.	0·3433		= 0·4536 kilog.	$\bar{1}$·6566
			1 ounce	= 16 drams	1·2041
1 metric ton	= 0·9842 ton	$\bar{1}$·9930	1 ton	= 1·016 metric tons	0·0069
				= 2240 lbs.	3·350

WEIGHT AND LENGTH

1 kg./metre	= 0·672 lb./ft.	$\bar{1}$·8273	1 lb./ft.	= 1·488 kg./metre	0·1726
	= 2·016 lb./yd.	0·3045	1 lb./yd.	= 0·496 kg./metre	$\bar{1}$·6955

VOLUME AND MASS

1 cub. m./m. ton	= 35·88 cb.ft./ton (Br.)	1·5548	1 cb. ft./ton (Br.)	= 0·028 cub. m./m. ton.	$\bar{2}$·4452
1 cub. m./kg.	= 16 cub. ft./lb.	1·2044	1 cub. ft./lb.	= 0·0625 cub. m./kg.	$\bar{2}$·7956
1 cub. m./short ton	= 1·12 cb. m./long ton	0·0492	1 cub. ft./long ton	= 0·893 cb. ft./short ton	$\bar{1}$·9508
	= 39·5 cb. ft./long ton	1·5971		= 0·0253 cb. m./short ton	$\bar{2}$·4028

CONVERSION TABLES—*continued*

PRESSURES

		Logarithm.			Logarithm.
1 kilo./sq. metre	= ·2048 lb./ft.²	$\bar{1}$·3113	1 lb./sq. ft.	= 4·882 kg./sq. m.	0·6886
1 kg./sq. cm.	= 14·223 lbs./in.²	1·1530	1 lb./sq. in.	= 0·0703 kg./sq. cm.	$\bar{2}$·847
	= 2048 lbs./sq. ft.	3·3113	1 lb./sq. ft.	= 0·000488 kg./sq. cm.	$\bar{4}$·6886
1 kg./sq. mm.	= 0·6348 ton/sq. in.	$\bar{1}$·8026	1 ton/sq. in.	= 1·575 kg./sq. mm.	0·1972
1 atmosphere	= 760 mm. Hg.	2·8808	1 atmosphere	= 14·7 lbs./sq. in.	1·1672
	= 1·0333 kg./sq. cm.	0·0142			
			1 lb./sq. in.	= 27·7 inches W.G.	1·4425
1 cm. water	= 10 kg./sq. metre	1·0000		= 2·31 ft. W.G.	0·36361
			1 inch mercury	= 13·6 inches W.G.	1·1335
1 mm. mercury	= 1·36 cm. water	·1335			

WEIGHTS AND VOLUMES

1 gm./cub. m.	= 0·437 grain/cub. ft.	$\bar{1}$·6405	1 grain/cub. ft.	= 2·29 gm./cub. m.	0·3598
	= 1 ounce/1000 ft.³	..			
1 kg./cub. m.	= 0·0624 lb./cub. ft.	$\bar{2}$·7954	1 lb./cub. ft.	= 16·02 kg./cub. m.	1·2046
1 gm./cub. cm.	= 0·0361 lb./cub. in.	$\bar{2}$·5578	1 lb./cub. in.	= 27·68 gm./cub. cm.	1·4421

ENERGY, WORK, HEAT, TORQUE

1 kilog.-metre	= 7·233 ft. lbs.	0·8593	1 ft. lb.	= 0·1382 kg. m.	$\bar{1}$·1406
			1 B.Th.U.	= 778 ft. lbs.	2·8910
1 kilo-cal.	= 3·9683 B.Th.U.	0·5986		= 0·252 kilo-cal.	$\bar{1}$·4014
	= 426·9 kg. metres	2·6303		= 0·293 watt-hour	$\bar{1}$·4669
	= 3088 ft. lbs.	3·4896			
1 kw. hour	= 3412 B.Th.U.	3·5331	1 h.p. hour	= 746 watt-hours	2·8725
	= 860 kilo-cals.	2·9344		= 2545 B.Th.U.	3·4056
	= 1·341 h.p. hours	0·1274		= 641 kilo-cals.	2·8070
1 metric h.p. hour	= 736 watt-hours	2·8665	1 h.p.	= 33,000 ft. lbs./min.	4·5185
	632·4 cals.	2·8010			
	= 75 kg. m./sec.	1·8750			

VELOCITIES

1 metre/sec.	= 196·85 ft./min.	2·2941	1 foot per sec.	= 18·288 m./min.	1·2622
	= 2·237 miles/hr.	0·3496	1 mile per hr.	= 0·447 m./sec.	$\bar{1}$·6503

ACCELERATIONS

1 cm./sec./sec.	= 0·0328 ft./sec.²	$\bar{2}$·5159	1 ft./sec.²	= 30·48 cm./sec.²	1·4840
Gravity	= 980·6 cm./sec.²	2·9915	Gravity	= 32·1717 ft./sec.²	$\bar{1}$·5075

MISCELLANEOUS

n° C.	$= \left(\frac{9n}{5}+32\right)$° Fahr.	..	N° F.	$= \left\{\frac{(N-32)\times 5}{9}\right\}$° C.	..
1 cal./kg.	= 1·8 B.Th.U./lb.	..	1 B.Th.U./lb.	= 0·5556 cal./kg.	$\bar{1}$·7447
100 cals./m.³	= 11·236 B.Th.U./ft.³.	..	1 B.Th.U./ft.³	= 8·898 cals./m.³	0·9493
1° Twaddell	= specific gravity of water + $\frac{1}{200}$th specific gravity of water.				
1 gal. of water (Br.)	= 10 lbs.				

VOLUME AND TIME

1 cub. metre/hr.	= 0·5886 ft.³/min.	$\bar{1}$·7698	1 ft.³/min.	= 1·698 cub. m./hour	$\bar{0}$·2299
1 cub. metre/sec.	= 2124 ft.³/min.	3·3271	1 ft.³/min.	= 0·00047 cub. m./sec.	$\bar{4}$·6729

INDEX

ACIDITY, test for, 470
ADAMS, 10, 17, 21
AIR, admission to gas, 286, 427
  composition of, 8, 77, 428
  density of, 428
  excess in furnaces, 507, 524
  filter, 412
  heat in saturated, 380
  machines for handling, 430-445
  producer gas, 2, 27
  pump, 407
  reactions with carbon, 7
  saturating, 269
  specific heat of, 508
AIR SATURATION TEMPERATURE—
  automatic control of, 258, 280
  definition of, 269
  effect on gas composition, 32
AIR SATURATOR, by-product plant, 295
  general, 264-268
  Lymn's, 264
  Smith Gas Eng. Coy., 266
  three-stage cooler and, 418
  using fuel as, 418
  using jacket water, 248
AIR AND STEAM MIXTURE, heat in, 65
  regulating for vaporizers, 255, 258, 260
  superheated, 273
  table for saturated, 270
  temperature of, 269-273
  thermostat control of, 267, 273
AIR VOLUME for combustion of gases—
    theoretical, 506
    practical, 515
  for gasification, theoretical, 77, 78
    practical, 428
AKERLUND, down-draught producer, 317
  spray washer, 391
ALKALIES, in ash, 120
ALLGEMEINE VERGASUNGSGESELLSCHAFT—
  gas cleaning plant, 418
  tar recovery producer, 307
ALTITUDE, effect of, 429
ALUMINA in ash, 126
  in firebricks, 196
AMMONIA, concentration in gas, 85, 404, 413
  conservation of, 93
  decomposition rate, 85
  equilibrium, 84
  recovery chart, 94
  recovery efficiency in producer, 94
    in plant, 405
  solubility coefficient, 413
AMMONIA ABSORBER, corrosion of, 406
  efficiency of, 405
  material for, 405
AMMONIA ABSORPTION, by calcium sulphate, 415
  by carbon dioxide, 414
  by chlorine, 414
  as liquor, 413
  as neutral sulphate, 411
  by nitric acid, 414
  by scrubbing, 412, 414
  by sulphuretted hydrogen, 422-425
  by sulphuric acid, 404
  Lymn's washer for, 406
  Mond's process for, 280, 404, 414
  Moore's plant for, 412
  Power-Gas plant for, 405
  Thyssen's saturator for, 411, 412
AMMONIA FORMATION, Bone and Wheeler on, 91
  effect of ash upon, 87
  effect of CO_2 upon, 87
  effect of distillation temperature upon, 82
  effect of distillation time upon, 83, 88, 92
  effect of fuel nature upon, 80, 87
  effect of hydrogen upon, 88
  effect of lime upon, 93
  effect of nitrogen upon, 88
  effect of steam, 86, 91
  effect of tar yield, 82
  heat loss due to, 60
  in low temperature producer, 92
  principles of, 79-95
  rate of, 89
AMMONIA RECOVERY PRODUCER, Crossley, 285
  Duff, 284
  for brown coal, 287
  for lignite, 288

AMMONIA RECOVERY PRODUCER—*contd.*
for peat, 289
general, 279-297
Lymn, 285
Mond, 280, 282
Moore, 291
Power-Gas Corporation, 294
Young & Beilby, 280
AMMONIA TESTS, for, in fuel, 462
in gas, 468
in sulphate, 470
AMMONIUM, chloride, 414
sulphate. *See* SULPHATE
AMSLER, producer house, 355
sawdust filter, 387
self-vaporizing producer, 258
ANALYSIS of by-products, 470, 471
fuels, 460-463
gas, 463-470
ANTHRACITE, analysis (typical), 68
bulk weight, 211
gasification, rate of, 39, 41
nitrogen in, 79
sulphur in, 115
ANTHRACITE GAS PLANT, coolers and cleaners, 382-390
producers (self-vaporizing), 255-264
suction type. *See* SUCTION
water consumption, 379
working costs, 478
ANTIPULSATOR, 449
APPLEBY COMPANY, Bentley fuel agitator, 234
Bentley mechanical feed, 220
Kerpely producer, 171
AREA of flues, 369
grate, 37, 167
mains, 369
producer (definition of), 37, 38
ARNEMANN, 307
ARRANGEMENT of gas producers, 352-366
ASBESTOS (valve), 372
ASH, analysis, 121, 124, 462
catalytic effect of, 19, 23, 24
composition of, 117-127
effect of alkalies in, 120
effect of alumina in, 126
effect of iron in, 119
effect of lime in, 120
effect of silica in, 126
effect of sulphur in fuel on, 115, 119
effect on ammonia yield, 87
effect on gasification rate, 42
effect on gas quality, 75
effect on thermal efficiency, 54
elevator, 188
handling plant, 352-366
melting point of, 118
plough, 173
reciprocating discharge, 186
removal, 191, 237, 241
screw, 168
shovel, 170, 237, 241
ASH—*contd.*
in tar, 470
ASHES (producer), carbon in, 55
sensible heat in, 57
testing, 462
ASHING, control of, 475
doors, 152
effect on gas quality, 32
hand, 149-168, 475
mechanical, 168-191, 237, 475
in traction producer, 343, 345
ASPIRATOR (gas), 467

BAG (gas), 449
BALANCED (reactions). *See* REVERSIBLE
BALL (poke hole), 214
BAMAG, fuel hopper, 206
grate, fan-shaped, 183
high pressure, 188
BANTLIN, 96
BAROMETRIC (pressure), 429
BARTH, grate drive, 190
mechanical grate, 181
BEARDMORE, 350, 492
BEILBY, 86, 280
BELL (fuel feeding), effect on fuel distribution, 203
Mond producer, 283
vegetable refuse producers, 326
BENDER & FRAEMBS, 277
BENSON, 102
BENTLEY, mechanical fuel agitator, 234
mechanical fuel feed, 220
BENZENE (properties of), 506
BESWICK, 294
BILDT (feed), 217
BISCHOF, gas producer, 3, 150
refractory coefficient, 125, 195
BITUMINOUS COAL, analyses (typical) of, 68, 462
bulk weight, 211
cleaning gas from, 390-403
gasification rate of, 39, 40, 41
nitrogen in, 79
suction producer for, 315, 320
sulphur in, 115
tar yield from, 112, 114
testing of, 461
water for cooling gas from, 379
BLAST, air and steam. *See* AIR
dry, 27, 29, 135-145
BLAST FURNACE, producers, 135-145
slag, 121
BLIZARD & MALLOCH, 322
BLOTTING PAPER (test), 469
BLOWERS, centrifugal, 435-441
jet, 430-435
positive, 441-445
positive *v.* centrifugal, 445, 446, 448
regulation of, 445-449
BODENSTEIN, 86
BOG IRON (ore), 423
BOILER, exhaust gas, 268, 488
gas-fired, 489, 490

BOILER PRODUCER, Koppers-Kerpely, 253
Marischka, 249
BOILING PAN (gas fired), 503
BONE on, ammonia yield, 91
cupola producer, 135
fusibility of ash, 121
steam in gas producers, 32
BONECOURT BOILER, 490
BOUDOUARD, 10, 14
BOURCOUD, 335
BRAUTIGAM, 139
BREATHING, gas, 478
BRENNSTOFFVERGASUNG A.-G. f.—
brown coal gasification, 417
reciprocating ash discharge, 186
tar recovery producer, 300, 307
" " plant, 417
BREUER, 82
BRICK KILN, 499
BRICK LINING, design of, 192-198
drying of, 473
of gas mains, 366-368
repointing of, 478
for traction producers, 341
BRITISH FURNACES, LTD., 501
BROOKS PRODUCER, 168
BROWN COAL, bulk weight, 211
gasification rate, 41
gasification results, 287, 306, 307, 321, 330
nitrogen in, 79
sulphur in, 115
tar yield, 103
BROWN COAL GASIFICATION—
in by-product recovery producer, 287
double zone producer, 321
low temperature tar producer, 306, 307
BRYAN DONKIN, 447
BULK weight of fuels, 211
BUNKER fuel, 352-366
BURKHEISER, 424
BURNERS, gas, 489
BURNING GASES, general, 505-524
in producer, 9, 427
in Pintsch producer, 315
in Syracuse producer, 314
BURNING OUT, 376
BYPASS VALVE, 448
BY-PRODUCT RECOVERY, ammonia (theory of), 79-95
gas producers, 279-313
gas treating plant, 403-425
liquid slag producer, 148, 308
low temperature gasification *v.* distillation, 312
plant *v.* non-recovery, 311
plant, working costs, 480
plant tests, 468-471
sulphur (theory of), 115, 116
tar (theory of), 94-114

CAKING, effect on gasification rate, 40, 224, 334
tendency, judging, 462
CALCIUM SULPHATE, 415
CALORIFIC VALUE. *See* HEATING VALUE
CALORIMETER (gas), 467
CAMBRIDGE, down-draught producer, 317
wood-log producer, 212
CAMDEN IRON WORKS—
duplex grate producer, 163
mechanical fuel feed, 223
Taylor producer, 168
Wood, R. D., producer, 243
CARBON, in ashes, 55, 462
balance, 459
free (in tar), 470
heat of reactions, 7
heating value, 8
CARBON DIOXIDE—
effect on ammonia scrubbing, 414
endothermal agent, 25
formation of, from air, 8, 9
from steam, 16, 19
heat of formation, 7
solubility coefficient, 413
specific heat, 62, 508
test for, in gas, 465
CARBONIZATION (low temperature) *v.* gasification (low temperature), 312
CARBON MONOXIDE, formation of, from air, 8
from CO_2, 11, 13
from steam, 16, 19, 21
heating value, 72, 506
ignition temperature, 488
properties, 506
specific heat, 62, 508
test for, 466
CARBURIZING (stove), 501
CASCADE (washer), Dowson & Mason, 391
Lynn, 393
Ruston, 392
Smith, 399
Wells, 392
CASING (producer), design of, 192, 198-202
water jacketed, 246
CELLULOSE (distillation), 96
CENTRAL, gas outlet, 209, 334
grate producers, 160-163
CENTRIFUGAL fan, 435-441
v. centrifugal blower, 435
v. positive blower, 445, 446, 448
gas washers, 392-398, 405, 420
CENTRIFUGE, sulphate, 405, 407
tar, 405, 415
CHADWICK, 93
CHAPMAN, crown (producer), 195
floating agitator, 229
fuel feed, 221
jet blower, 433
CHARCOAL, bulk weight, 211
gas cooling plant, 382
reduction rate of CO_2, 12
of steam, 17
traction producers, use in, 341
CHARGING DEVICES, down-draught producers, 317
hand (*see* Hopper), 204-213

CHARGING DEVICES—*contd.*
mechanical, 216-223
rotary bunker, 357
travelling bunker, 357
vegetable refuse, 326-356
CHLORINE, absorbing ammonia, 414
in gas, 469
CHRISTIE, 80-83
CHRYSTAL, 411
CINFIELD, 102
CIRCUMFERENTIAL, fan speed, 397
grate producers, 158-160
CLEANING, electric precipitator, 402
flues, 355, 368, 376
heat loss due to cleaning water 60
means for, 376
pressure during, 427
valves, 450
CLEANING PLANT for—
by-product producers, 403-425
gas from bituminous fuels, 390-403
traction producers, 341, 344, 347
CLEMENT (Adams & Haskins)—
on CO_2 reduction, 10
on steam reduction, 17, 21
CLINKER FORMATION, effect of using flue gases, 276
general, 42, 117
influence of ash components, 119-123
CLOSED HEARTH, 149
COAL. *See* BITUMINOUS
bulk weight, 211
handling and storage, 352-366
testing, 462
COBB, on ammonia, 83, 88
on hydrogen sulphide extraction, 425
on hydrogen sulphide formation, 116
COKE, breeze, ballast, 333
bulk weight, 211
cooling gas from, 383
dust erosion, 375
filling, 388
gasification rate of, 39, 40
results of, 251
nitrogen in, 79-84
reduction rate of CO_2 over, 12
of steam over, 17
sulphur in, 116
COLD GAS *v.* hot gas, 311, 312, 367, 490, 504
dryness of, 403
COLOUR (sulphate), 409
COMBUSTION OF GAS, comparison, 512-519
general, 505-524
in producer, 9, 427
temperature, 509
time, 509, 512
CONCRETE PRODUCER, 201
CONDENSER, jet, 405
reflux, 414
CONSTAM, 123
CONTROL TESTS for by-products, 470
fuels, 460-463
gas, 463-468
CONTROL TESTS—*contd.*
impurities in gas, 468-469
moisture in air, 273, 469
in gas, 469
CONTROLLING blast from jet blowers, 430
records, 476
steam and air mixture, 255, 258, 260, 273
CONVECTION, heat losses, 57
CONVEYING PLANT, 352-366
COOLING, *Gas :*
direct *v.* indirect methods, 377
effect upon volume, 429
heat abstracted when, 380
reasons for, 367, 403
theory of, 377-381
water consumption, 378, 379
Plant :
bituminous fuels (see WASHERS), 390-403
by-product, 403-425
coke packing, 388
Crossley, 384
Dowson, 382, 385
Galusha, 389
marine producer, 351, 352
national gas engine, 382
operation of, 476
Power-Gas Corporation, 385
Sharp Basset, 384
small producers, 338
three-stage cooler and saturator, 418
traction producer, 344, 347
Surface :
water jackets, 248
Water :
from gas engines, 489
heat in, 403
on board ship, 349
quantity of, 379
temperature of, 378
COPPER FURNACE, 494
CORROSION, of ammonia absorber, 405
in by-product plant, 406
in evaporator, 407
from exhaust gases, 268
in Marischka producer, 252
in water jackets, 249
COSTS, operating, 478-483
COTTRELL, electric cleaning, 402
CRITICAL PRESSURE (orifice), 434
CROSSLEY BROTHERS—
ammonia recovery producer, 285
fuel hopper, 208
open hearth grate, 159
peat producer, 330
self-vaporizing producer, 261
suction gas plant, 384
vegetable refuse producer, 327
CROSS SECTION of producer, 38, 158, 192
CROWN BRICKS, 194
CRUCIBLE FURNACE, 354
CUPOLA PRODUCER, 135
CYCLONE DUST CATCHER, 375

DAMPER, sand, 371
DAVIDSON, 438
DAWSON PRODUCER, 162
DECOMPOSITION of ammonia, 85
of carbon dioxide, 9, 22
of steam (in by-product producer), 91
(laboratory tests), 16, 22
(works tests), 32, 35
DEFINITION of furnace efficiency, 516
of N.T.P., 71, 269, 428
of producer area, 37, 38
of producer efficiency, 47
of saturation temperature, 269
DEFORMATION RANGE, ash, 118
DEHYDRATOR, tar, 405, 415
DENSITY of gas, air, 428
effect on gas distribution, 451
effect on gas metering, 471
effect on gas pressure, 437
DEPTH OF FUEL BED, control of, 475
effect of fuel grading, 39
effect on gas quality, 14, 32, 35, 72, 75
effect on gasification rate, 39
for peat gasification, 289
for refuse gasification, 323
for traction producers, 341
DEUTSCHE MONDGAS COMPANY, 299
DEUTZ, drying stove, 503
dwarf producer, 338
gas washing fan, 397
mechanical grate, 183
peat producer, 329
rotary grate, 329, 338
spray washer, 391
DEW POINT, of gases (table), 270
of products of combustion, 516
DIAMETRAL GRATE PRODUCERS, 157-158
DIAPHRAGM, governor, 448
DIFFUSER, 435, 440
DIMENSIONS OF PRODUCERS, central grate, 163
duplex grate, 164
liquid slag, 140
Taylor, 169
DIRECT v. indirect gas cooling, 377, 404
DISC VALVE, 369
DISINFECTION, producer gas, 338
DISINTEGRATORS, gas, 417-420
DISTILLATION, composition of distillation gas, 26
exothermal heat of, 48, 65, 310, 462
gas, heating value, 26
previous to gasification, 297-311
products from various fuels, 96-107
by sensible heat, 310
test for fuels, 460, 462
DISTRIBUTION GAS, 450-455
DIXON, 361
DOLCH, 103
DOUBLE-ZONE PRODUCERS—
Canadian Dept. Mines on, 32
Dowson & Mason, 320
Pintsch, 320
Westinghouse, 261
DOWN-DRAUGHT PRODUCER, Akerlund, 317
Cambridge, 212, 317
cleaning gas from, 391
Fernald on, 318
v. up-draught, 314
DOWSON, J. E., 3, 27, 282
DOWSON & MASON, cascade washer, 391
double zone producer, 319
Duff mechanical poker, 233
recovery producer, 284
Moore recovery producer, 291
self-vaporizing producer, 255
suction gas plant, 385
DRAKENBURGH, 350
DRIVE, for mechanical fuel feeds, 222, 235
for mechanical grates, 174, 180, 183, 189
for mechanical pokers, 228, 229, 240, 242, 245
DRY BOTTOM PRODUCER, 149
DRY SCRUBBER, Amsler, 387
Dowson & Mason, 385
Galusha, 389
material for, 396
National gas engine, 395
Power-Gas Corporation, 385, 396
Ruston, 387
Sharp-Basset, 384
velocity in, 389
DRYING, of moist fuels, 307, 417
of peat, 289
of sulphate, 405, 408, 409
DRYING STOVE, 503
DUFF, ammonia recovery producer, 284
grate, 155
mechanical poker, 233
DUNN, 123
DUPLEX, blast (Hughes), 239
(Kerpely), 171
grate producers, 163-166
DUST, analysis, 143, 376
in by-products, 404
in gas, 53, 252, 374, 376
test for, 469
loss (prevention of), 144, 384
(sawdust producer), 323
(thermal), 53
(traction producer), 343
removal, 363, 476
settling in mains, 369
specific gravity of, 376
value in, 374
washer, 404
washing, 394
DUST SEPARATORS, erosion by coke, 375
Parker (traction), 347
principles of, 374
Rehmann producer, 144
Smith (traction), 345
velocity in, 376
DUSTY FUELS, Bourcoud producer, 335
cleaning gas from, 390-403, 427
Pintsch producer, 334

DYNAMIC EQUILIBRIUM, of ammonia, 84
of carbon and oxides, 9
and steam, 15
of methane, 23

EBELMEN, 3, 27, 133
EFFICIENCY, of ammonia absorption, 405
of ammonia formation, 91, 94
of centrifugal fans, 438
of dust (dry) removal, 375
of furnaces, 512, 516
of gas engine, 487-489
of gas turbine, 493
of gas-fired boiler, 490
of H_2S formation, 116
of H_2S removal, 424
of positive blower, 442
of superheater, 283
of tar formation, 49, 111
of tar removal, 395, 398
thermal, definition of, 47
of vaporizers, 258, 263
EHRHARDT & SEHMER-
arrangement of producers, 364
boiling pan, gas-fired, 503
mechanical feed producer, 219
mechanical grate producer, 176
tar recovery producer, 299
ELECTRIC, gas cleaning, 402
ELEVATORS, fuel, 352-366
EMPTYING, producer, 477
EMULSION, tar, 397, 405, 415
ENDOTHERMAL AGENTS, from lime kiln, 499
products of combustion, effect of, 24
plant using, 273-279
steam. *See* STEAM
ENGINE, gas, general, 487-489
marine, 348-352
using cooling water from, 489
using exhaust gas from, 268, 488
EQUILIBRIUM CONSTANT, ammonia, 85
carbon and oxides, 10
and steam, 16
EQUIVALENT, heat from gases, 518
pipe length, 451
EROSION, in by-product plant, 406
of coke dust, 375
ETHYLENE, 25, 72, 506
EUTECTIC MIXTURES, 118, 120, 196
EVAPORATOR, vacuum, 405, 407
EXHAUST, boiler, 268, 488
EXOTHERMAL, distillation heat, 48, 310, 462
EXPANSION COEFFICIENT, fireclay, 197
EXPLOSION, during cleaning, 427, 478
door, 371, 450
due to flow reversal, 450
safeguards, 474, 478
during starting, 474, 477
EYNON-EVANS, 432

FAN (centrifugal), Davidson, 438
definition of, 435

FAN (centrifugal)—*contd.*
diffuser, 435, 436
impellers, 435, 436
Keith, Blackman, 436
overloading, 439
power of, 438
speed, effect of, 438
test results, 438-440
v. positive blower, 445, 446, 448
washing, gas, 392-398, 420, 427, 438
FARUP, 16
FEEDING OF PRODUCER—
hand (*see also* HOPPER), 202-216
mechanical, 216-223, 235, 343
traction, 343, 347
FELD, 424
FERNALD on cooling water, 379
on down-draught *v.* up-draught, 318
FERRIC HYDROXIDE, sludge, 423
FICHET, 135
FIELD, 119, 123
FIELDNER, 118, 119
FILLING, scrubber, coke, 388
iron, 389
pebbles, 347, 389
sawdust, 388, 389
stoneware, 405
wood, 329, 391
FILTER, acid spray, 405
box, 385-389
dust, 345
glass wool, 399
rotary, 420
screw plug, 400
FIREBRICK, producer, 192-198, 341
quality, 193
FIRECLAY, 192, 196
FISCHER, 105, 110
FLAME, radiative power of, 506
velocity of, 505, 506
FLAME TEMPERATURE, definition of theoretical, 509
effect of moisture in gas, 521
effect of pre-heat, 522
FLAT GRATE PRODUCERS, 150-152
FLINN, DREFFEIN, cleaning bituminous gas, 400
mechanical grate, 183
tar extractor, 401
FLUES, underground, 368
FORGE, furnace, 499
FOSTER, 451
FRANK, 113
FREYTAG-METZLER, 420
FUEL, analysis of various, 68, 462
bell, 203, 283, 326
charge, capacity of, 202, 211
distribution, 202, 206, 216, 223
feeding and stirring, general, 246
floating agitator, 229, 233
grading. *See* GRADING
handling, 352-366
leveller (Morgan), 240
nitrogen content in, 79

FUEL—*contd.*
storage, 352-366
sulphur content in, 116
tests, 460-468
used for producer gas manufacture, 4, 325
weight, bulk, 211
FUEL BED, depth (*see* DEPTH), 14, 32, 35, 39
resistance, 203, 323 333, 426
temperatures, 28, 31
FUEL NATURE, EFFECT UPON, ammonia yield, 80, 81
CO formation, 12, 14
gas quality, 32, 76
gasification rate, 41
methane formation, 22
steam decomposition, 19
tar yield, 96-107
FURNACE, boiling pan, 503
brick kiln, 499
carburizing, 501
copper, 494
crucible, 334
drying stove 503
efficiency, 512
chart, 519
forge, 499
glass, tank, pot, 495
lead, 495
lime kiln, 499
muffle, 497
plate, 503
pressure loss in semi-gas, 427
recuperative, 497, 498
regenerative, 495, 497
rotary, 500
small, 504
tool, 499
FUSING TEMPERATURE, ash, determination of, 119
effect on gas quality, 75

GALUSHA, gas cleaning, 389
marine producer, 352
steam raising, 274
GAS, analysis, 463-467
antipulsator, 449
bag, 449
by-pass, 448
calorimeter, 467
cleaning (*see* CLEANING), 367-421
cooling (*see* COOLING), 367-421
direct *v.* indirect, 377
density, 428
distribution, 450-456
drying. *See* DRYING
engine, 487-489
filter. *See* FILTER
firing *v.* coal firing, 489
governor, 447-449
green, burning, 314-317
heating value, 72, 506
holder, 446
hot *v.* cold, 311, 312, 367, 490, 504

GAS—*contd.*
leakages, 59, 286, 427, 499
mains. *See* MAINS
metering, 471, 472
outlet pipe, central, 209
outlet temperature, 61, 74
pipe seal, 383
piping, 450-456
pressure gauge, 449, 472
pressure, governing, 447-449
properties, 506
pump, 490-492
quality (*see* QUALITY), 30-76
quantity, 76-78, 429
for distilling fuels, 310
for testing, 468
saturating, 378
saturation temperature, 269, 274
scrubbing. *See* SCRUBBER
specific heat, 61, 508
testing, 467-471
turbine, 492-494
valve, 369, 450
velocity. *See* VELOCITY
volume, 78, 429
washing. *See* WASHING
GAS PRODUCER AND ENGINEERING CORPORATION, 274, 352
GASES, industrial, analysis of, 513
equivalent volumes in furnaces, 518
properties of, 506
GASIFICATION, low temperature, *v.* carbonization, 312
GASIFICATION RATE, ash, effect of, 42, 117
Bell, effect of, 203
charts, 45, 46
definition of, 37
down draught producer, 318
dusty fuels, 334
effect of depth, 39
effect of distribution, 203, 216
grading, effect of, 39, 40
load factor, 38, 43
mechanical grate producer (Hilger), 181
moisture, effect of, 41
nature of fuel, effect of, 40
slagging producers, 141, 146
traction producers, 341, 343
GAUGE, pressure, 449, 472
GAY-LUSSAC, law of, 429
GEORGE MECHANICAL FEED, 219
GEORGS-MARIENHUETTE PRODUCER, 27, 140, 142
GILMORE, 99
GLASS, furnace, 495
-wool filter, 399
GLUUD, 82, 110
GOETZ, grate scraper, 182
star-grate, 180
steam-blown pokehole, 215
GOVERNOR, pressure, Bryan-Donkin, 447
diaphragm, 448
hot gas, 449
Pintsch, 448

GRADING OF FUEL, determination of, 460
effect upon dust loss, 53, 144
effect upon fuel depth, 39
effect upon gasification rate, 40
GRATE, area, 37, 167
central grate producers, 160-163
circumferential grate producers, 158-160
design, 167
diametrical grate producers, 155-158
drive, 174, 180, 183, 189
duplex grate producers, 163-166, 236
flat grate producers, 150-152, 343, 345
grateless producers, 166-167, 186, 332
high pressure, 187
Kerpely, 171
mechanical grate producers, 168-191
removable (Deutz), 329, 338
step grate producers, 153-155
GRAY, 104
GROUVEN, 86
GWOSDZ, on liquid slag producers, 308
on steam reduction, 19
on Tait gas producer, 275
GYPSUM, 415

HABER, 84
HAGAN PRODUCER, 157
house, 359, 360
HAGER & WEIDMANN, 420
HAHN, 16
HALL, 118, 119
HAND, ashing, 149-168
feeding, 203-213
poking, 213-216, 224, 475
HARRIES, 16
HARVARD, 195, 197
HASKINS (CLEMENT, ADAMS &), 10, 17
HAUSDING, 98
HEARTH, open v. closed, 149
HEAT, concentration on combustion, 505, 506
of distillation, 48, 65, 310, 462
in products of combustion, 507
in saturated gas, 378-381
for sulphate evaporation, 409
from vaporiser, 258, 263
in *water* from air saturator, 265
in *water* from gas cooling, 264, 405
in *water* from producer jacket, 59, 247
HEAT CONDUCTIVITY, of firebricks, 197
of gas cooling, direct v. indirect, 377, 381
in superheaters, 283
HEAT LOSS in ashes, 55
in furnaces, 519, 524
in producer. *See* THERMAL EFFICIENCY
in tar recovery producers, 303
HEATING SURFACE, vaporizers, 262
HEATING VALUE, ammonia, 60
carbon, 7, 8
determination, 467
distillation gases, 26
fuel, definition of, 47
various, 462
HEATING VALUE—*contd.*
gases, 71, 506
hydrocarbons, 70, 467
producer gas. *See* QUALITY OF GAS
sulphuretted hydrogen, 60
tar, 50, 111
HELLER PRODUCER, 166
HEMPEL, 463
HERMANSEN, crucible furnace, 354
enameling muffle, 497
flat grate producer, 150
glass pot, 497
lime kiln, 498
step grate producer, 154
HERRMANNS, 144
HEURTY, 135
HILGER, fuel hopper, 206
mechanical grate, 179
HOFFMANN MANUFACTURING COMPANY
log sheet, 476
Lymn plant, 406
HOLBORN AND HENNING, 61
HOLDER, gas, 446
HOLLINSHEAD, 93
HOLZAPFEL, 350
HOLZWARTH, 492
HOPPER, Bamag, 206
Cambridge, 212
double valve, 204
Hilger, 206
Kerpely, 207
Parker, 347
Pierson, 209
rotary, 207, 208
Sharp-Basset, 207
shovel fed, 205
Stein, 210
Vulcan, 207
Wells, 213
wood, 212
HOT GAS, handling, 367-377
pressure governor, 449
v. cold, 311, 312, 367, 490, 504
HOUSING, gas producers, 352-366
HUDLER, 276
HUGHES, mechanical feed, 222
mechanical poker, 225, 237
HUMPHREY, H. A., on air saturation, 36
on gas distribution, 455
on plate valve, 373
on pump, 490-492
HUNTING, of governor, 449
HUTH & ROETTGER—
duplex grate producer, 163
fuel bed lifter, 182
HYDROCARBONS, 70, 464, 467
HYDROGEN, determination of, 466
formation of, from steam, 16, 19, 20
from volatile matter, 25
heating value, 72, 506
ignition temperature, 488
nascent, 88, 90

HYDROGEN—*contd.*
properties of, on combustion, 506
specific heat, 62
sulphuretted. *See* SULPHURETTED

IGNITION TEMPERATURE, 488, 506
IMPELLER, fan, 435
IMPURITIES IN GAS, test for, 468-470
INDIRECT GAS COOLING, *v.* direct, 377, 404
Moore's plant, 412
Thyssen's, 411
INSULATING BLOCKS, 192
INTENSITY, thermal, 507
INTERNATIONAL CLAY CONSTRUCTION CO.—
central grate producer, 162
kiln, brick, 499
INTERNATIONAL CONSTRUCTION CO. (*see also* MORGAN), 240
IRON, in ash, 119
slag, use of, 143
from slagging producers, 136, 143

JACKET, water, 246-249
JAWORSKI, 299, 303
JET BLOWER, Chapman, 433
Eynon-Evans, 432
Korting, 431
Ledward, 431
Meldrum, 431
steam consumption, 430, 432, 434
Wellman, 432
JET CONDENSER, 405
JOINTS, fireclay, 193
gas piping, 450
recuperator, 499

KEITH, BLACKMAN, 436
KERPELY, FUEL HOPPER, 207
-Koppers producer, 253
producer, 170
KILN, gas-fired, 499
KING, 104
KIRKE BOILER, 490
KITSON PRODUCER, 170
KOPPERS-KERPELY PRODUCER, 253
KORTING, 431
KRANENDIECK, 86
KYNOCH, 209

LAMBRIS, 81
LANGEN, 62
LARGE PRODUCERS, 339
LATTA, 357
LEAD, pot, 495
LEAKAGE, losses, 59, 427
in recuperators, 499
in superheaters, 286
LEDWARD-BECKETT, 431
LEECH, 33
LESSING, 123
LIGHTING UP PRODUCER, 473
LIGNITE, analyses, 462

LIGNITE—*contd.*
for boiler firing, 489
bulk weight, 211
by-product plant, 288
gasification of, 288, 331
gasification rate, 41
nitrogen in, 79
sulphur in, 115
tar yield from, 103
LIMBERG, 120
LIME, effect on ammonia formation, 93
effect on clinker formation, 120
kiln, 499
-stone, in slagging producer, 137
LINCK, 300
LINING, brick, drying producer, 473
general, 192-198
mains, 366, 367, 368
pointing, 478
slagging producer, 137, 148
traction producer, 341, 345
LIQUID SLAG, melting point, 119, 121
viscosity, 123
LIQUID-SLAG PRODUCERS, Georgs-Marienhuette, 139
Pintsch, 145
Rehmann, 144
S.F.H., 135
Thwaite's, 135
Wuerth, 138
LOAD FACTOR OF PRODUCERS, 38, 43
LOAD FLUCTUATION—
centrifugal fans, 438, 446
effect on air saturation temperature, 266, 430
positive blowers, 444, 446
quality of gas, 255, 430
LOCOMOTIVE, refuse, 333, 384
LOG SHEET, 476
LOG-WOOD PRODUCER, 212
LORRY (*see* TRACTION), Parker, 345
Smith, 343
Thornycroft, 339
LOW TEMPERATURE GAS PRODUCER—
Allgemeine Vergasungsgesellschaft, 307
ammonia yield in, 93
general, 78, 95
Power-Gas Corporation, 294
tar yield in, 112
LOW TEMPERATURE GASIFICATION *v.* low temperature carbonization, 312
LOW TEMPERATURE TAR PRODUCTION—
in external mechanical retorts, 307
in external stationary retorts, 304, 307
in internal mechanical bells, 299
in internal revolving retorts, 300-304
in internal stationary bells, 298, 299
internal *v.* external retorts, 308-311
liquid slag producers, 308
Mond producer, 298
Power-Gas Corporation producer, 294
LYMN, air saturator, 264
ammonia-recovery producer, 285
on gas turbine, 493

LYMN—*contd.*
-Rambush producer, 173, 182
washer, 393
in ammonia-recovery plant, 405, 406
test on, 394

MAINS, hot gas, burning out, 377
cleaning of, 352-366, 376
lining of, 366, 367, 368
overhead *v.* underground, 368
sizes of, 369
velocity in, 369
MARINE PRODUCERS, Capitaine, 350
Drakenburgh, 350
Galusha, 352
gas-cleaning, 389
Holzapfel, 350
MARISCHKA, producer, 249
on dust separation, 375
MARKGRAF, 138, 143
MARSH GAS. *See* METHANE
MAYER AND V. ALTMAYER—
on ammonia formation, 81
on carbon oxides, reaction of, 10
on methane formation, 23
MEASURING ROD, 475
MECHANICAL PRODUCERS, in regard to—
ashing, 168-191
charging, 216-223
stirring, 223-244
MELDRUM, 431
MELTING POINT of ash, 118, 119
of fireclays, 195
METHANE, determination of, 466
formation of, by heat, 25
formation of, from steam, 17, 22
heating value, 72, 506
ignition temperature, 488
properties of, on combustion, 506
specific heat, 62
MILWAUKEE BOILER CO., 259
MOISTURE IN AIR, test for, 273, 469
MOISTURE IN FUEL, for air blast, 268, 417
effect on gas quality, 72
effect on gasification rate, 41
effect on tar yield, 307
effect on thermal efficiency, 48
MOISTURE IN GAS—
effect on analysis, 464, 466, 515
effect on flame temperature, 521
sensible heat of, 62, 508
test for, 469
MOISTURE IN SULPHATE, 408, 470
MOISTURE IN TAR, dehydrated, 405, 415
emulsions, 397, 399, 412
test for, 470
MOLECULAR REACTION HEAT, 7, 8
MOND, L., ammonia absorption process, 404
ammonia recovery producer, 280, 282
brine as absorbing agent, 414
engine exhaust for gas producer, 274
MOND GAS PLANT, general, 280, 284

MOND GAS PLANT—*contd.*
gasifying brown coal, 287
lignite, 288
peat, 289
making neutral sulphate in, 411
MOND GAS PRODUCER, ammonia yield in, 91
tar yield in, 112, 298
temperatures in, 31
MOND TRUMP PRODUCER, 166
MONKHOUSE, on ammonia, 83, 88
on sulphuretted hydrogen, 115
MOORE, gas cooling plant, 412
producer, by-product, 93, 291
tar extractor, 399
MORGAN, gas machine, 240
mechanical feed, 221
producer arrangement, 365
MOTHER-LIQUOR, 408
MUFFLE, furnace, 497
MUSHROOM VALVE, 370

NAGEL, 212
NASCENT, hydrogen, 88, 90
NATIONAL GAS ENGINEERING CO.—
dry scrubber, 395
flat grate producer, 151
portable producer, 339
self-vaporizing producer, 257
small gas applications, 504
suction gas plant, 353, 382
NET HEATING VALUE of fuels, 47
of gases, 72
NEUMANN, on equilibrium of carbon oxides reaction, 10
on gas composition in stages of formation, 29, 32
on specific heat of gases, 61, 507
NEUTRAL, sulphate, 411
NITRIDES, 83, 87
NITROGEN, content of fuels, 79
content of gas, 77
determination of, in gas, 467
distribution in distillation products, 80, 82
specific heat of, 62, 508
N.T.P., 71, 269, 428

OIL WASHING, of gas, 405, 417
OLIN, 103
OPEN HEARTH, 149
producer, 159
OPERATING, costs, 478, 483
plant, 475-477
platform, 352-366
OPERATING RESULTS—
of Bender & Fraemb's vaporizer, 278
of Bentley fuel agitator, 235
of brown coal gasification, 287, 330
of Chapman fuel agitator, 232
of double-zone producers, 320-322
of down-draught producers, 318
of green gas, burning, 315
of Hughes, mechanical poker, 240

OPERATING RESULTS—*contd.*
of Kerpely producer, 172
of lignite gasification, 288, 331
of liquid-slag producer, 135, 142, 146
of Lymn plant, 286, 407
of Lymn-Rambush producer, 176
of Ma ischka producer, 251
of Mond producer, 32, 282
of Moore producer, 291
of Morgan gas machine, 242, 243
of peat gasification, 289, 330
of Pintsch mechanical grate, 178
of Power-Gas low temperature producer, 294
of Smith mechanical poker, 236, 237
of smoke box char, 335
of steam jet blowers, 432-434
of Talbot mechanical poker, 229
of vegetable waste, 326, 327
ORIFICE, discharge, gas, 472
steam, 434
OXYGEN, content in engine exhaust, 488
content of fuels (various), 462
content of furnace gases, 508, 516
content in producer gas, 286, 330, 427
determination of, 466
reactions with carbon, 7, 8
specific heat of, 62, 508

PACKING, dry scrubbers, 388, 395, 396
wet scrubbers, 388
PARABOLIC BUNKER, 358
PARKER, lorry, 345
scrubber, 347
PARR, 103, 115
PARTIAL PRESSURE of ammonia, 85, 86, 413
of steam in gas mixtures, 269, 272, 429
PATCHELL, on corrosion in by-product plant, 406
on gas pressures and temperatures, 406
on Lymn plant, 286
PATON, 293
PEAT, analyses, 462
for boiler firing, 489
bulk weight of, 211
by-product recovery from, 239
gasification of, 289, 321, 330
gasification rate, 41
nitrogen in, 79
sulphur in, 115
tar yield from, 98, 99
PELOUZE-AUDOIN, 399, 412
PHENOL, in liquors, 60, 407
in tars, 106, 111, 471
PICTET, 103
PIERSON PRODUCER, 209
PIG IRON. *See* IRON
PINTSCH, annular producer, 337
liquid-slag producer, 145
mechanical grate producer, 177
pokehole, air-blown, 215
portable producer, 338
pressure-governor, 448
producer for dusty fuels, 334

PINTSCH—*contd.*
rotary bunker, 356
tar destruction producer, 315, 320
tar extractor, 399
tar recovery producer, 304
top vaporizer, 257
PIPING (*see also* MAINS)—
"equivalent" length, 451
gas distribution, 450-455
PITOT TUBE, 472
PLATE, furnace, 503
PLATE VALVE, asbestos, 372
quadrant, 373
PLATFORM, 352-366
PLUG, pokehole, 214
POETTER, 180, 362
POISONING (producer gas), 338, 478
POKEHOLE, air-blown, 215
ball, 214
bricks, 194
plug, 214
steam-blown, 215
POKER, Bentley, 234
Chapman, 229
Duff, 233
hand, 213, 476
Hughes, 225, 237
Smith Engineering Co., 234
Talbot, 225
Wood, R. D., 243
POKING, 213-216, 224, 475
POLE, on gas flow, 450
POLYTHIONATE, 424
PORTABLE PRODUCER, 339
POSITIVE BLOWER, 441-445
POTENTIAL, thermic, 505
POWELL, 115
POWER, from producer gas, 487-49
reduction of, for lorry engines, 339
used in throttling gas, 448
POWER CONSUMPTION of centrifugal fans, 438
of mechanical feeds, 222
of mechanical grates, 189
of mechanical pokers, 228, 229, 240, 242, 245
POWER-GAS CORPORATION, on ammonia yield, 92
arrangement of producers, 358
by-product recovery plant, 405
central grate producer, 163
cleaning bituminous gas, 394
concrete producer, 201
copper furnace, 494
gas-analysis set, 465
lignite producer, 331
low-temperature producer, 294
Lymn-Rambush producer, 173
plate furnace, 502
self-vaporizing producer, 256
suction-pressure plant, 385
on sulphur extraction, 423
Talbot producer, 225
on tar yield, 112
vegetable refuse producer, 326

PREDISTILLATION, retorts, 297-311
temperatures in, 299, 302, 303, 306
PREHEAT, effect of, 522
PRESSURE, in by-product plant, 406
of distribution, 451-455
effect of altitude, 429
effect upon dust removal, 427
effect of speed, blower, 445
effect of speed, fan, 438
effect upon volume, 429
gauges, 449, 472
from jet blowers, 432, 434
plant v. suction plant, 426
regulation, 445-449
PRESSURE CONTROL, against explosion, 427
general, 445-449
by reducing valve, 431
by speed regulation, 446
PRESSURE LOSS, in by-product plant, 406
effect on delivery pressure, 446
effect on gas quality, 368, 430
in gas flues, 368
in gas piping, general, 450-456
in gas piping, special, 454
general conditions of, 426, 427
location of, 476
machinery, effect on, 445
in sawdust, 323
in semi-gas producer, 427
in suction gas plant, 426, 427
in tar filters, 399, 401
PRODUCER, area, cross-sectional, 38, 158, 192
arrangement of, 352-366
brick-lining, 192-198
boiler, 249-254
by-product recovery, 279-313
casing, 192, 198-202
dimensions. *See* DIMENSIONS
double-zone, 320-322
down-draught, 314-317, 591
dusty fuels, 333-337
efficiency, thermal, 47-70
emptying of, 477
gas distribution in, 160
gas quality, 70-76
gasification, rate of, 37-46
grates. *See* GRATES
hand-ashed, 149-168
hand-fed, 202-216
large, 337
lighting up of, 473
liquid-slag, 133-148
low temperature, 294-311
marine, 348-352
mechanically ashed, 168-191
mechanically fed, 216-223
mechanically stirred, 223-246
open v. closed hearth, 149
operating results. *See* OPERATING RESULTS
operation of, 475
peat and lignite, 329-333
protection of, 352-362
PRODUCER—*contd.*
radiation of, 57
reinforced concrete, 201
self-vaporizing, 254-264
shutting down of, 477
small, 338
tar destruction, 313-323
tar recovery, 294-311
vegetable refuse, 323-328
water-jacketed, 246-249
wet v. dry bottom, 149
PRODUCER GAS PROCESS, 2
PRODUCTS OF COMBUSTION, general, 507-509
use for drying peat, 289
use as endothermal agent, 24, 273-279, 499
PULSATIONS, preventing, 499
PUMP, Humphrey, 490, 492
PURGING, of plant, 384, 474
PURIFYING GAS, from ammonia, 405
from sulphur, 422
from tar, 395, 398

QUADRANT, valve, 373
QUALITY OF GAS, burner for testing, 383
determination of (analysis), 464
effect of air saturation, 32, 35
effect of ash, 75
effect of ash removal, 32
effect of double zone, 323
effect of down-draught, 318
effect of fuel depth, 73, 75
effect of fuel distribution, 203
effect of fuel nature, 76
effect upon gas-engine, 488
effect of gas-outlet temperature, 74
effect of jet blowers, 431
effect of load fluctuations, 255, 430
effect of moisture content, 72
effect of pressure loss, 368, 430
effect of radiation losses, 75
effect of steam pressure, 431
effect of superheater, 66, 282, 290
effect of vaporizer, 254
effect of water-jacket, 75, 247
at various layers, 27, 31
QUANTITY OF AIR, calculating, 428
QUANTITY OF GAS, effect of altitude, 429
effect of moisture content, 429
effect of temperature, 429
"equivalent" in furnaces, 518
general, 76-78
required for distilling fuels, 310

RADIATION, of flame, 506
losses, 57, 75
RAMSEY, 86
RATE OF GASIFICATION (*see* GASIFICATION), 37-46
RAU AND LAMBRIS, 81
READING IRON CO., 376
RECOVERY, of ammonia. *See* AMMONIA
of by-products. *See* BY-PRODUCTS
of tar. *See* TAR

RECUPERATION, furnace, 497, 495, 522
REDUCING VALVE, 431, 475
REFLUX CONDENSER, 414
REFRACTORY COEFFICIENT, of ashes, 125
of fireclay, 125, 195
REFUSE, vegetable, 325
REGENERATION, furnace, 495, 497, 522
REGULATION—
of air and steam mixture, 256, 258, 260
of jet blowers, 430
of pressure and volume, 445-449
REHMANN, liquid slag producer, 144
mechanical grate producer, 177
tar recovery producer, 299
REINFORCED CONCRETE, producer of, 201
RESISTANCE (*see also* PRESSURE LOSS) of fuel bed, 203, 323, 333, 426
RETORT, predistillation, general, 297-311
temperatures in, 299, 302, 303
REVERSIBLE REACTIONS, ammonia, 84
carbon and oxides, 9
and steam, 15
methane, 24
RHEAD AND WHEELER—
on carbon and oxides reaction, 10, 14
and steam reaction, 21
RICE HUSKS, 327
RICHMOND, stove, 502
ROCKWELL, 501
ROLLER BEARINGS, 176
ROOTS BLOWER, 441
ROSER, 108, 298, 411
ROTARY, blower, 441-445
bunker, 356
feeding valve, 207
furnace, 500
gas producer, 331
grate, Deutz, 329, 338
general, 168-191
meter, 471
tar filter, 420
ROYSTER, 123
RUSTON, HORNSBY, charging sawdust, 356
gas-cleaning plant, 392
waste-wood producer, 326
wood-wool drier, 387

S.F.H. PRODUCER, 135
SABATIER AND VIGNON, 22
SACHS, 93
SAFEGUARDS, 474, 478
SALMANG, 87
SAMPLING, ashes, 463
fuels, 460
gas, 463, 467
SAMUELSON, 443
SAND sealed, damper, 371
disc valve, 369
SATURATING AIR, from air heaters, 268
from gas cooling water, 264, 405, 418
from gas-engine cooling water, 489
from gas-engine exhaust, 266-268
SATURATING AIR—*contd.*
from jacket water, 248
from moisture in fuel, 268, 418
from vaporizers, 255, 258, 260
SATURATION TEMPERATURE, air, 269
gas, 378
effect of altitude, 429
effect of jet blowers, 431
effect of steam pressure, 431, 475
SAWDUST, gasification of, 323, 328
storing of, 356
SAWDUST SCRUBBER, designs of, 382-390, 395
necessity for, 398
packing of, methods, 388, 395, 336
removable basket, 387
repacking, 399
velocity in, 389, 395
SCHNEIDER, 107
SCRUBBER (*see also* WASHERS), ammonia, 412, 414
bituminous fuel, 390-403
clean fuel, 382-390
cleaning of, 384
coke-filling, 388
marine plants, 351, 352
Parker, traction, 347
Small, 338
Smith, traction, 344
SEA WATER, 349, 389
SELF-VAPORIZING PRODUCERS, 254-264
SEMI-GAS, furnaces, 354, 497, 498
pressure loss in producer, 427
v. plain gas firing, 504
SENSIBLE HEAT (*see also* SPECIFIC HEAT)—
gases, 62, 367, 508
water vapour, 62, 508
SEPULCHRE, 135
SETTLING TANKS, 405
SHARP-BASSET, fuel feed, 207
scrubber, 384
self-vaporizing producer, 259
SHARPLES, 415
SHELL producer, design of, 192, 198-202
water-jacketed, 247
SHIP PROPULSION, 348-352
SHUTTING-DOWN, producer, 477
SIEMENS PRODUCER, 3, 153
SILICA, in ash, 126
in fireclay, 196
SKIN TEMPERATURE, producer, 58
SLAG, analysis, 136, 143, 146
"liquid slag" producer (*see* "LIQUID SLAG")
viscosity, 123
SLIP, blower, 441
SMALL GAS PRODUCER, 338
SMITH, C. D., on liquid slag producer, 137
SMITH, D. J., on motor vehicles, 343
SMITH GAS ENGINEERING CO.—
air-saturating method, 266
gas cleaning plant, 399
glass-wool filter, 399
mechanical poked producer, 234
shaking grate producer, 151

SMOKE BOX CHAR, gasifying, 333, 334
SOOT, formation of, 53
SPECIAL BRICKS, 194
SPECIFIC GRAVITY, of air, 428
of dust, 376
of fuels, 211
of gas, 428, 437
of sulphate liquor, 405, 409, 470
of tar, 103, 109, 470
SPECIFIC HEAT, of air, 508
of ashes, 57
of gases, 62, 508
of water vapour, 62, 508
SPEED (*see* VELOCITY), ALTERATION—
of blower, effect of, 444
of fan, effect of, 438
SPENT TAN, gasification of, 327
SPRAY, catcher for acids, 405
for evaporator, 407
washer, 391
water, 383, 385
STAGES, gas production, 27, 31
STANDBY, fuel, 477
of marine producer, 352
STANSFIELD, 99
STARTING-UP, down-draught producer, 317
general, 473-475, 477
purge pipes, 384, 474
steam raising when, 260
suction gas plant, 254, 383, 385, 386, 390
test burners, 383, 474
time for, 477
STEAM—
consumption of jet blowers, 430, 432, 434
decomposition of, 17, 22, 34, 35, 61
effect upon ammonia formation, 86
effect upon hydrogen sulphide formation, 116
pressure, effect on gas quality, 431
quantity, effect on gas composition, 32, 35
reactions with carbon, 7, 16, 22
reducing valve, 431
specific heat of, 62, 508
for sulphate liquor evaporation, 409
undecomposed, 61, 92
STEAM FOR PRODUCER, from air heaters, 268
from blower exhaust, 443
from direct combustion, 277
from flue gases, 275, 276
from gas-cooling water, 264, 405
from gas-engine exhaust, direct, 274, 275
from gas-engine exhaust, indirect, 266, 268
from Koppers-Kerpely producer, 253
from Marischka producer, 252
from moist fuels, 268, 418
from producer drive, 174, 236
from vaporizers, 254-264
from water jacket, 249
when gasifying vegetable refuse, 323
STEAM JET, blowers, 430-435
critical velocity of, 434
kinetic energy of, 435
STEIN & ATKINSON, Chapman producer, 229
forging furnace, 500
fuel hopper, 210
glass tank, 496
mechanical grate producer, 172
step grate producer, 154
STEP GRATE PRODUCERS, 153-155
STEPHAN-BOLZMANN, 57
STORING OF FUEL, capacity, 211, 358
general, 352-366
STRACHE, 103
SUCTION PLANT, Amsler, 258
Crossley, 261, 327, 384
Dowson & Mason, 255, 319, 385
dusty fuels, 334
National Gas Engine Co., 257, 383
Pintsch, 315, 320, 334
Power-Gas Corporation, 256, 326, 385
pressure loss in, 427
v. pressure plant, 426
Ruston, 326
Sharp-Basset, 259, 384
suitability of anthracite for, 426
Syracuse, 260
velocity in gas piping, 369, 450
SULPHATE OF AMMONIA
ammonia content of, 94, 408, 409
colour of, 409
evaporator, 408
impurities in, 408, 409
LIQUOR, acid in, 405, 408
concentration of, 405, 409
mother, 408
neutral, 409, 411
recovery efficiency, producer, 94
washing, 405
specific gravity of solutions, 410
steam for evaporating solutions, 409
tests for, 470
SULPHUR, content of various fuels, 115
distribution in distillation products, 116
distribution in fuels, 115
effect on clinker formation, 119
extraction, 422-425
test for, in gas, 469
yield by gasification, 116
SULPHURETTED HYDROGEN, estimation of, 469
evolution by gasification, 116
extraction from gas, 422-425, 504
heat loss due to formation, 60
ignition temperature, 488
SULPHURIC ACID, in mother liquor, 408, 409
in sulphate, 408
in sulphate liquor, 405, 408
spray catcher, 405
test for, 470
SUPERHEATED AIR AND STEAM MIXTURE, 273
SUPERHEATER, Crossley, 285
Duff, 284
effect of, 66, 290
heat transmission in, 283
leakage in, 286

SUPERHEATER—*contd.*
Lymn, 285
Mond, 282
Thyssen's, 412
SYRACUSE COMPANY, green gas burning, 314
high-pressure fan, 441
self-vaporizing producer, 260

TAIT, 275
TALBOT, 225
TAN, spent, 327
TANKS, settling 405, 417
TAR, acids (*see also* PHENOL), 106, 111, 471
analyses, 97, 99, 104, 110, 114, 304, 307, 440
cleaning gas from, 390-403, 416-421
cleanliness, degree of, 395, 398
content in gas, 322, 395
dehydrator, 405, 415
destruction in producer, 235, 313-323
disintegrator, 405, 420
distillation tar *v.* producer gas tar, 113
emulsion, 397, 405, 415
evolution range, 96, 102, 107, 462
filter, 399, 400, 420
fog, 397
from FUELS—
bituminous coal, 106
brown coal, 102
cellulose, 96
lignite, 99
peat, 98
wood, 97
heating value, 50, 111
phenol content in, 106, 111
properties of, 1[illegible]
quantity for washing gas, 421
recovery efficiency, 112
removal in producer, 313-323
settling, 405, 415, 417
specific gravity, 103, 109
tests for, 468, 470
uses of producer gas, 109
yield. *See* TAR YIELD
TAR DESTRUCTION PRODUCER Akerlund, 317
Cambridge, 212, 317
Dowson, 319
Fernald on, 318
Mond, 284
Pintsch, bituminous coal, 315
brown coal, 320
Syracuse, 314
Westinghouse, 216, 321
TAR EXTRACTION, efficiency of, 398, 421
electrical, 402
factors in, 396
glass wool, 399
by oil, 405, 417
Pelouze Audoin, 399
screwed plug, 400
washing fans, 392-398, 405, 417-420
TAR RECOVERY PRODUCER, 294-311
Allgemeine Vergasungsgesellschaft, 307

TAR RECOVERY PRODUCER—*contd.*
A.-G. f. Brennstoffvergasung, 300, 307
Deutsche Mondgas Gesellschaft, 299
Ehrhardt & Sehmer, 299
Linck, 300
Pintsch, 304
Power-Gas Corporation, 294
Rehmann, 299
Thyssen, 298
TARRY WATER, cooling of, 379
TAR YIELD, effect of distillation method, 100
effect of moisture in fuel, 307
effect of steam, 106
effect of temperature, 100, 102, 108, 303, 304
effect of time, 109
effect on gasification efficiency, 49
effect in gas producers, 110, 112, 294, 304, 307
method of determining, 107, 462
relation to volatile matter content, 105
TAYLOR, liquid slag producer, 135
mechanical ash table, 168
TEMPERATURE—
by-product recovery plant, chart of, 406
clinkering, 118
of combustion, 509
difference, when cooling gas, 378
effect upon air volume, 428
effect upon carbon dioxide formation, 20
effect upon carbon monoxide formation, 10, 13, 20
effect upon dust loss, 53
effect upon gas volume, 429
effect upon hydrogen formation, 20
effect upon soot loss, 53
effect upon steam decomposition, 18
effect upon sulphate liquor weight, 409
final, of products of combustion, 512
flame, 506, 509
fuel bed, 28, 30
gas outlet, 61, 68
ignition, 488, 506
initial, of combustion, 512
low. *See* LOW TEMPERATURE
predistillation retorts, 299, 302, 303, 306
saturation, 269, 378, 429
traction gas producers, 341
water-jackets, 248, 249
TEST BURNER, 383
TESTING, ash, 462
by-products, 470, 471
fuels, 450-463
gas, 463-470, 474
plant, 473-475
for tightness, 473
THEISEN, 420
THERMAL EFFICIENCY, of boiler, gas fired, 490
of furnace, 516
effect of initial temperature, 512
effect of time temperature, 512
THERMAL EFFICIENCY PRODUCER—
when burning green gases, 315
carbon balance basis, 459
definition of, 47

THERMAL EFFICIENCY PRODUCER—*contd.*
of double-zone producer, 321
of down-draught producer, 318
effect of ammonia formation, 60
effect of ash content, 54
effect of cleaning gas, 60
effect of dust and soot, 53
effect of gas outlet temperature, 61
effect of grading of fuel, 51
effect of heat of fuel decomposition, 65
effect of heat in air and steam mixture, 65
effect of leakages, 59
effect of moisture content of fuel, 48
effect of radiation, etc., 57
effect of sensible heat of fuel, 65
effect of sensible heat of gas, 61
effect of steam supply, 47, 66
effect of sulphur content, 60
effect of superheater, 66, 290
effect of tar content of fuel, 49
effect of water-jacket, 59
of liquid slag producer, 142
typical examples, 68
THERMAL INTENSITY, 507
THERMIC POTENTIAL, 505
THERMOSTAT, air and steam control, 267, 273
THORNYCROFT, marine producer, 350
traction producer, 339
THWAITE, B. H., 135
THWAITES BLOWER, 442
THYSSEN, arrangement of producers, 363
indirect recovery plant, 411
mechanical grate, 177
tar recovery producer, 298
TIME FACTOR—
effect upon ammonia decomposition, 86
formation, 88
carbon dioxide formation, 20
monoxide formation, 13, 20
dust settling, 376
gas cooling, 388, 394
gas producer practice, 14
hydrogen formation, 17, 20
steam decomposition, 17
tar oil recovery, 109, 112
TOOL FURNACE (high speed), 499
TRACTION GAS PRODUCERS—
depth of fuel bed, 341
general, 339-348
lining, 341
Parker, 345
reduction of engine-power, 339
Smith, 343
Thornycroft, 339
TRAVELLING FUEL CHARGER, 357
TRENKLER, on by-product recovery from brown coal, 287
on predistillation retorts, 303, 308
on Siemens producer, 153
"TRIMMING" OF FUEL, in bell, 263
in shoots, 364
TURBINE, gas, 492-496
UNDECOMPOSED STEAM, 34, 35, 61
UNDERGROUND FLUES, 368, 369
UNSATURATED HYDROCARBONS, 70, 464, 466
UNWIN, 455
UP-DRAUGHT PRODUCER *v.* down-draught, 314, 318
U.S. CAST IRON AND PIPE FOUNDRY COMPANY, mechanical fuel feed, 221
poker, 246

VACUUM EVAPORATOR, advantages of, 408
general, 405, 407
VALUE, of ammonia, 78, 312
of ash, 117
of dust, 374
of sulphur in fuel, 422
of tar, 78, 109, 312
VALVE, hot-gas, disc, 369
mushroom, 370
plate, 371-373
VAPORIZER, heating surface, 262
sea water for, 349
steam control, 255, 258
VAPORIZER TYPES Akerlund, 317
Amsler, 253
Bender & Fraembs, 276
Crossley, 261
Dowson & Mason, 255
Drakenburgh, 351
Galusha, 274
National Gas Engine Company, 257
Pintsch, 257
Power-Gas Corporation, 256
Sharp-Basset, 259
Syracuse, 260
traction producers, 344, 345
Westinghouse, 261
VEGETABLE REFUSE, bulk weight, 211
types of, 325
VEGETABLE REFUSE PRODUCER—
cleaning plant for, 391-393
Crossley Brothers, 327
Deutz, 329
Power-Gas Corporation, 326
Ruston, 326
Wells, 213, 327
VELOCITY, flame, 506
in centrifugal washers, 397
in dust separators, 376
in gas piping, 450
in hot-gas mains, 369
in tar filters, 400
VENTILATION, of producer house, 352-366
VENTURI METER, 471
VERITY, PRODUCER, 201
VIELE, BLACKWELL & BUCK, 331
VISCOSITY, slag, 123
tar, 114
VOLATILE AMMONIA, 79, 92, 462
VOLATILE MATTER, effect on gas formation, 25
effect on gas quality, 76
VOLUME, air, 428
alteration upon gasification, 77

VOLUME—*contd.*
altitude, effect of, 429
blower speed, effect of, 444
fan speed, effect of, 438
hot gas, 369
moisture, effect of, 269, 429
pressure, effect of, 269, 429
regulation of, 445-449
temperature, effect of, 269, 429
VULCAN PRODUCER, 207

WASHERS, GAS cascade, 391-393
dust, 404
Flinn, Dreffein, 400
Lymn, 393-395
Smith, 399
spray, 391
WASHERY, silt, 333
WASHING-FANS, general types, 392-398, 405, 420
pressure increase in, 427
using oil in, 405, 417
WASTE-WOOD. *See* VEGETABLE REFUSE
WATER, cooling plant, 379, 418
of decomposition, 61
distribution, cascade, 391, 393
phenols in cooling, 407
sea, 349, 389
sprays, 383, 385
utilizing heat in, 403, 489
vapour. *See* MOISTURE OR STEAM
WATER CONSUMPTION, combined air saturator and gas cooler, 265
direct gas cooling, 379, 378
gas washing fans, 395
water-jacketed producers, 248
WATER CONTROL, self-vaporizing producers, 258, 260
WATER JACKET, as boiler, low-pressure, 253
corrosion of, 249
general, 245-249
heat loss in, 59, 247, 248
Kerpely, 170
Kitson, 170
marine producer, 351
Pierson, 209
WATER-LOGGED SOIL, 368
WATER PURITY, for Marischka producer, 252
sea water, 349
for vaporizers, 264
for water-jacketed producers, 248, 249

WEATHER, protection against, 353, 359, 352-366
WEIGHT. *See also* SPECIFIC GRAVITY
dust, 376
fuels in bulk, 211
WELLMAN, asbestos valve, 372
Hughes producer, 238
jet blower, 432
mechanical feed, 222
steam-blown pokehole, 215
WELLS, cascade washer, 213, 327
producer, 392
WENDT, K., 27
WESTINGHOUSE, tar destruction producer, 321.
vaporizer, 261
WET, bottom producers, 149
gas meter, 471
WHEELER, on low-temperature distillation, 103
BONE AND WHEELER, on ammonia yield in Mond producer, 91
on ash in coals, 121
on varying steam quantities, 32
RHEAD AND WHEELER, on carbon and oxides reaction, 10, 14
on carbon and steam reaction, 21
WILSON, central grate producer, 161
mechanical ash removal, 168
WOOD, analysis, typical, 68, 462
boiler firing, 489
bulk weight, 211
gasification rate, 39, 41
Hopper, 212
nitrogen in, 79
sulphur in, 115
tar yield from, 97
waste, 323-328
wool-drier, 385-390
WOOD, R. D., gas machine, 243
WOOD PRODUCER, Cambridge, 212
Crossley, 327
double-zone, 321
Power-Gas, 326
Ruston, 326
Wells, 213, 327
WORKING, costs, 478-483
plant, 473-478
WRIGHT, JOHN, furnace, 495
WUERTH, 138, 142
YOUNG, on ammonia, 86, 280

ZINC SULPHATE, Cobb's process, 45

THE END

DIRECTOR OF INDUSTRIES
JAN 1924
35

THE POWER-GAS CORPORATION Ltd.,

TELEGRAMS:
"TETRATOMIC, STOCKTON-ON-TEES."
TELEPHONE:
501 STOCKTON-ON-TEES.
(4 LINES)

PARKFIELD WORKS,
STOCKTON-ON-TEES.

LONDON OFFICE: 39 Victoria Street, S.W.1.

SPECIALISTS IN GAS PRODUCER PLANT.

GAS PRODUCERS OF
VARIOUS TYPES
TO SUIT
PARTICULAR.
FUELS,
GAS REQUIREMENTS,
OPERATING CONDITIONS.

MECHANICAL, PRESSURE, SELF-VAPORISING,
STATIC, SUCTION, SUCTION-PRESSURE,
Etc., Etc., TYPES.

[SEE NEXT PAGE.

THE POWER-GAS CORPORATION Ltd.,

TELEGRAMS
"TETRATOMIC, STOCKTON-ON-TEES."
TELEPHONE:
501 STOCKTON-ON-TEES.
(4 LINES)

PARKFIELD WORKS,

STOCKTON-ON-TEES.

LONDON OFFICE: 39 Victoria Street, S.W.1.

SPECIALISTS IN PLANT FOR THE RECOVERY OF FUEL BYE-PRODUCTS.

(MOND AND LYMN SYSTEMS, Etc.)

LOW TEMPERATURE BYE-PRODUCT RECOVERY GAS PRODUCER PLANT.

Producing from **FUEL** of different qualities

PRODUCER GAS
or
WATER GAS.

TAR.

OILS.

FUEL OILS.

DISINFECTANTS, ANTISEPTICS.

PITCH.

AMMONIA.

SULPHATE OF AMMONIA.

WOOD PRESERVATIVES.

LIQUOR AMMONIA.

[SEE PREVIOUS PAGE.

EXHAUSTERS AND COMPRESSORS

(ROTARY POSITIVE TYPE)

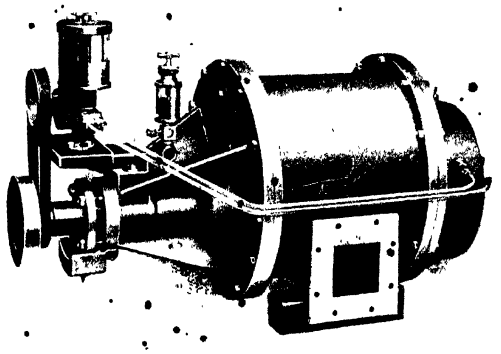

View of a Rotary Compressor with forced lubrication, suitable for high pressures.

These Rotary Exhausters and Compressors are particularly suitable for use with unpurified gases of temperatures up to about 80° C.

GAS VALVES

SPECIALLY DESIGNED FOR UNPURIFIED AND HOT GASES

GAS GOVERNORS

ALL TYPES SUPPLIED FOR REGULATING GAS PRESSURES

Send us your enquiries.

THE BRYAN DONKIN CO. LTD.

HEAD OFFICE & WORKS: CHESTERFIELD, ENGLAND.

MORGAN

WORCESTER, MASS.

PRODUCER

GAS MACHINE

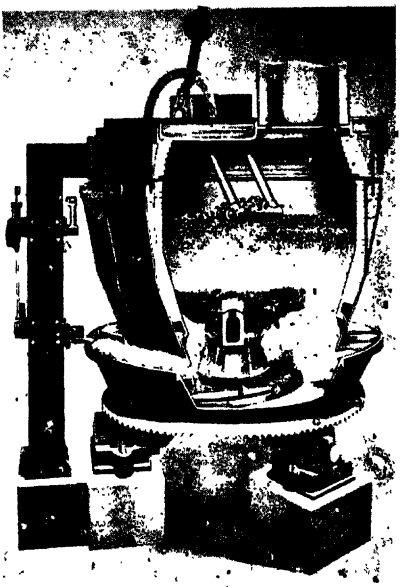

FIRST MACHINE IN GT. BRITAIN STARTED IN 1919.

HIGH QUALITY GAS

HIGH GASIFICATION

3000 LBS.

OF COAL PER HOUR AND MORE DEPENDING ON QUALITY OF COAL

LARGE SAVING IN FUEL

INCREASED OUTPUT

WITH MINIMUM LABOUR AND MAINTENANCE.

ARCA GAS PRESSURE REGULATOR

SAVES 3% to 17% FUEL.

FOR GAS PRODUCERS

INSURES REGULAR TEMPERATURES.

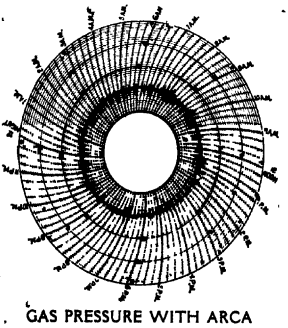

GAS PRESSURE WITH ARCA REGULATOR.

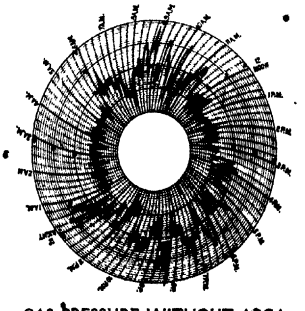

GAS PRESSURE WITHOUT ARCA REGULATOR.

APPLY TO

INTERNATIONAL CONSTRUCTION CO. LTD.

SUCCESSORS TO JULIAN KENNEDY SAHLIN & CO. LTD.

56 KINGSWAY, LONDON, W.C.2

WELLMAN MECHANICAL
GAS PRODUCER

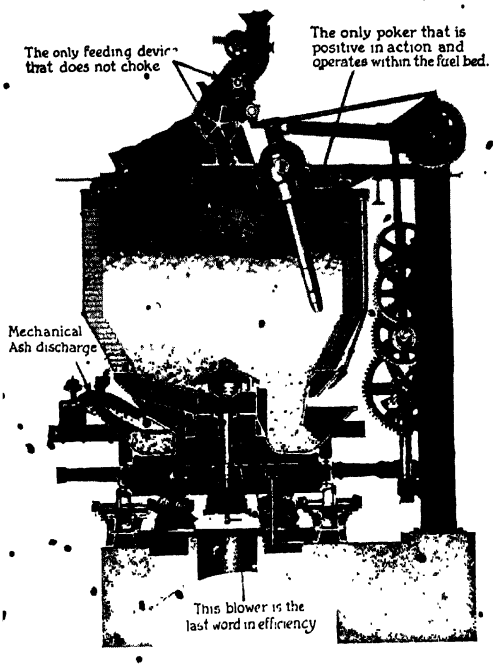

ANALYSIS OF GAS FROM WELLMAN MECHANICAL PRODUCER

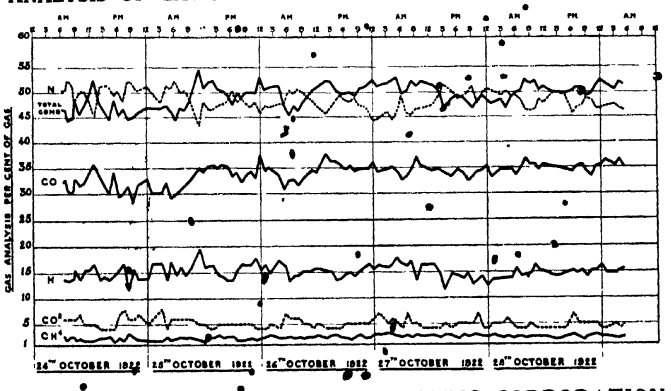

THE WELLMAN SMITH OWEN ENGINEERING CORPORATION Ltd.

Works: DARLASTON, S. STAFFS.

(Catalogues on request)

36/38 KINGSWAY, LONDON, W.C.2.

National

GAS ENGINES &
"GOLD MEDAL" SUCTION GAS PLANTS

Upwards of 50,000 *National engines (totalling millions of horse power) have been supplied, and are giving excellent results in all parts of the world.*

We manufacture

GAS ENGINES.

Horizontal and Vertical type in standard sizes from 2 to 2000 B.H.P. for operation on all kinds of gases.

Each type has been so designed as to secure accessibility to all bearings and working parts, and the general provisions are such that the effects of wear, the amount of gas and lubricating oil consumed, ease of cleaning, and other important features in the working of a gas engine are on the most efficient lines.

SUCTION GAS PLANTS.

Single units in standard sizes up to 500 B.H.P. for gasifying anthracite, coke, charcoal, wood refuse, and other waste fuels of a carbonaceous nature.

The National Suction Gas Plant was awarded the Royal Agricultural Society Gold Medal, after exhaustive trials of ten days' duration, as the most economical and efficient plant tested.

By the embodiment of sound engineering practice, best quality materials, and accurate workmanship, we are able to offer Gas Engines and Suction Gas Plants which are thoroughly Reliable, Economical and Simple.

We also exclusively manufacture Oil and Petrol Engines.

THE NATIONAL GAS ENGINE CO. LTD.
Ashton-under-Lyne, Nr. MANCHESTER.

Complete NATIONAL Gas Engine and Suction Gas Plant installation.

Keith=Blackman

Gas Exhausting

FANS

for drawing gas through Scrubbers or Purifiers, and feeding to Engines, Stoves, etc.

Made in various sizes to suit Producer Plants of all capacities.

These fans are arranged for belt-driving, direct-coupling to Electric Motors or Steam Turbines.

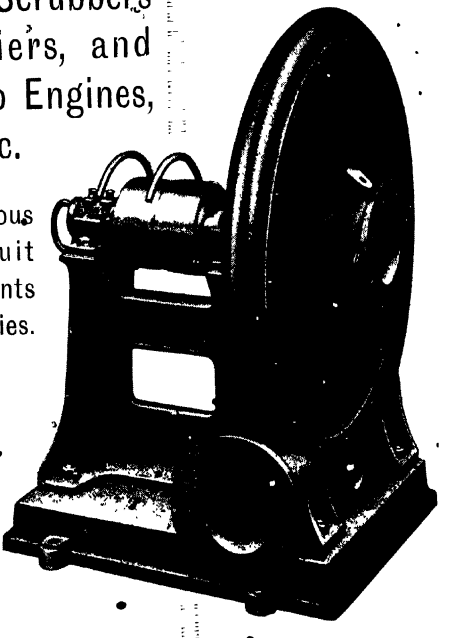

Send your enquiries, or write for List V49, to :—

James Keith & Blackman Co., Ltd.,

27 Farringdon Avenue, London, E.C.4,

kindly mentioning this publication.

IMPORTANT BOOKS IN THE GAS AND FUEL SERIES

NOW READY

BY-PRODUCT COKING

BY THE LATE G. STANLEY COOPER

B.Sc. (HONS. LOND.), F.C.S., M.I.MIN.E., ETC.

SECOND EDITION, ENLARGED AND COMPLETELY REVISED

BY ERNEST M. MYERS, F.C.S.

Manager of the Coking Department and Fuel Technologist to Shelton Iron, Steel and Coal Co., Ltd., Stoke-on-Trent, Honours Silver Medallist in Gas Engineering (City and Guilds of London Institute), etc., etc.

With 131 *Illustrations*, 200 *Pages and Index. Demy 8vo.* 12*s.* 6*d. net.*

The following extracts are from reviews of the first edition :—

"An exceedingly useful and well-prepared book on the subject, upon which there is an insufficiency of available literature."—*American Gas Engineering Journal.*

"The book is intended primarily for the student, but can be perused also profitably by a wider circle of readers, as all intricate technical explanations have been avoided as much as possible, while the expert may also find food for thought in its pages."—*The Iron and Coal Trades Review.*

"An admirable introduction to the subject . . . will prove very useful. The theoretical and practical sides of the various topics are well blended, and we highly recommend the book to our readers."—*The Science and Art of Mining.*

"We can recommend this book for the excellent account it affords of existing practice in by-product coking."—*The Colliery Guardian.*

THE DESTRUCTIVE DISTILLATION OF WOOD

BY H. M. BUNBURY, M.Sc. (BRIS.), B.Sc. (LOND.)

Associate of the Institute of Chemistry; Member of the American Chemical Society; Research Chemist to the British Dyestuffs Corporation.

With 108 *Illustrations*, 115 *Tables, over* 300 *Pages, Bibliography and Index. Crown 4to.* 35*s. net.*

"There is unquestionably room for a book with the scope thus outlined."—*The Times.*

"The whole subject has been handled in an exhaustive manner, and the history of the industry traced with a lucidity that is praiseworthy. . . . Throughout the book the language is simple and unaffected, and all chapters are well endowed with illustrations. The tables, in particular, are interesting. . . . The diagrams are the acme of clearness, and even those who do not possess an insight into the work can gather much from their study alone. . . . The work is one which can be said to have contributed its quota—and no small one, either—to the solution of the problem which has confronted technologists for many years past, namely, how to utilise waste products. We can remember no book before that has explored the possibilities of this question so deeply.'—*Gas.*

IN ACTIVE PREPARATION

COAL TAR DISTILLATION

BY ARTHUR R. WARNES, M.S.C.I., ETC.

THIRD EDITION, REVISED AND GREATLY ENLARGED

ERNEST BENN, LTD., 8 Bouverie Street, E.C.

IMPORTANT BOOKS IN THE GAS AND FUEL SERIES

JUST PUBLISHED

MODERN GASWORKS CHEMISTRY

BY GEOFFREY WEYMAN, D.Sc., F.I.C.

Chief Chemist to the Newcastle-upon-Tyne and Gateshead Gas Company.

Crown 4to. 194 *Pages*, 41 *Illustrations*, 14 *Tables, and Index. Price* 25*s. net.*

"This authoritative book will serve not only the chemist who makes gas, but also the mine operator who must fit his product to the needs of those who desire to use it."—*The Coal Age.*

"An eminently practical book. . . . The author has collected details of recently suggested processes, which, if brought into the daily routine, would prove useful, time-saving and economic."—*Engineering.*

"Dr. Weyman is to be congratulated on his excellent book, which so admirably fulfils its object . . . an exceedingly useful and practical book, which fills a long-felt need, and one feels sure that the book will find a ready welcome from all interested in gas manufacture."—W. A. WALMSLEY in *Chemistry and Industry.*

"The book will form a valuable addition to the library of every gasworks chemist, and if, as is suggested in the preface, it is read in conjunction with 'The Carbonisation of Coal,' by V. B. Lewes, and 'Modern Gasworks Practice,' by Awynè Meade, it will provide all the necessary information required for the routine control of the chemical side of coal-gas manufacture."—F. S. SINNATT in *The Analyst.*

GASWORKS RECORDERS

THEIR CONSTRUCTION AND USES

BY LEONARD A. LEVY

M.A. (Cantab.), D.Sc. (Lond.), F.I.C., F.C.S.; Neil Arnott Exhibitioner and Medallist at London Intermediate, B.Sc. in Physics; Gordon Wigan University Prize for Research in Chemistry, Cambridge University; Brevet-Major late R.E.; Cavalieri Order of Crown of Italy, etc., etc.

Crown 4to. 252 *Pages*, 202 *Illustrations, and Index. Price* 35*s. net.*

"'Gasworks Recorders' is a good book written at a good time. . . . Some who already use such recorders will learn more about them, as there are not many men on a works who master the instruments thoroughly, though this is very often due to the want of a good teacher. Dr. Levy fills that want in the descriptions he gives. . . . The method the author has adopted of separate description of essential parts makes the whole very clear, and teaches by comparison."—*The Gas Journal.*

"There would appear to be recording instruments available for purposes which one never suspected."—*The Times Trade and Engineering Supplement.*

THE ADMINISTRATION AND FINANCE OF GAS UNDERTAKINGS

WITH SPECIAL REFERENCE TO THE GAS REGULATION ACT, 1920

BY GEORGE EVETTS, ASSOC.M.INST.C.E.

CONSULTING ENGINEER

Member of the Institution of Gas Engineers; formerly Chamberlain Scholar at the University of Birmingham and Assistant Teacher of Mathematics, Mechanics and Surveying at the Westminster Technical Institute.

Crown 4to. 382 *Pages, with numerous Tables and Index. Price* 32*s.* 6*d. net.*

"The book will find a place in the technical library of every undertaking in the kingdom, from the largest to the smallest; and those who refer to it (as they must repeatedly feel the necessity of so doing) will have the information sought for presented to them in a clear and concise manner. Mr. Evetts has not only accomplished his purpose with marked success, but produced a volume the interest and use of which will be apparent to all engaged in the industry."—*The Gas Journal.*

"It will obviate much drudgery in the determination of the principles to be applied to particular cases. . . . An excellent index."—*The Colliery Guardian.*

"Particularly valuable to an assistant with several years' executive experience, who can reasonably expect to reach administrative rank in the near future as manager or as secretary. Such should make a close study of Mr. Evetts' work, and the book should accompany them to higher spheres of control."—*The Junior Institution of Engineers.*

"Mr. Evetts has produced an extremely clear and readable account of the legislative and administrative aspects of the gas industry."—*Nature.*

ERNEST BENN, LTD., 8 Bouverie Street, E.C.

IMPORTANT BOOKS IN THE GAS AND FUEL SERIES

MODERN GASWORKS PRACTICE. By ALWYNE MEADE, Assoc.M.Inst.C.E., Engineer of the Wapping Works of the Commercial Gas Company. Second edition, entirely re-written and greatly enlarged. Crown 4to. 827 pages. 500 illustrations. Index of 2000 references. 1921. 55s. net.

"'Alwyne Meade' should be found on the shelves of all progressive gas engineers and students, as it is an incomparable book of reference and text-book combined."—*Journal of the Institute of Chemical Industry.*

"The only possible competitor with the second edition is the first. The former is nearly double the size of the latter and correspondingly more valuable."—*The Chemical Age.*

"It is a work which no one seriously concerned in the practice of gas manufacture can afford to be without."—DR. CHARLES CARPENTER in *The Gas World.*

"No pains have been spared to include every development of note. The volume will serve the industry well for many years to come."—*The Daily Telegraph.*

"Every gas engineer will find a friend in the second edition of 'Modern Gasworks Practice.' A concatenation of such useful information and advice as should render it improbable for any designer or operator to go astray."—*The Gas Journal.*

"Imagination of a high order is tempered by critical and logical faculties which have been developed by the pursuit of scientific knowledge and long experience in the application of this knowledge to practical problems."—SIR GEORGE BELBY in *The Times.*

"A compendium invaluable to those concerned in present-day gas supply, and one which is certain to affect considerably their future outlook."—*Nature.*

"No gas engineer at his zenith can be equipped for his common daily task without this work at his elbow."—*Gas.*

"One reads such a book for instruction, and not for criticism."—*Engineering.*

"We have nothing but praise. . . . We have been unable to discover a single important question connected with the manufacture of town gas about which he does not give some information."—*The Engineer.*

"The most important work on gas manufacture that ever issued from the press of this or any country."—W. H. Y. WEBBER in *The Gas Engineer.*

THE PRACTICAL CHEMISTRY OF COAL. Embodying, with additions, the laboratory course in fuel technology at Sheffield University. By A. E. FINDLEY, B.Sc., A.I.C., and R. WIGGINTON, B.Sc., A.R.C.S. Demy 8vo. Numerous illustrations. 1921. 12s. 6d. net.

"The time is opportune for the appearance of this book. Useful to practical chemists in gas and coke works, as well as to students in fuel technology."—*The Gas Journal.*

"The book should be of decided use to students, and contains many points which will be of value to industrial chemists."—*The Gas Engineer.*

"Should prove most useful in works laboratories."—*Nature.*

THE CARBONISATION OF COAL. A Scientific Review of the Formation, Composition and Destructive Distillation of Coal for Gas, Coke and By-Products. By VIVIAN B. LEWES, F.I.C., F.C.S., etc. With an addition on Recent Developments by A. B. SEARLE. Second edition. Demy 8vo. Fully illustrated. 1918. 12s. 6d. net.

"Will be hailed with satisfaction by all . . . who desire to possess the most recent information on this important subject."—*The Times.*

"It will be readily admitted that there is no one more competent than the author to deal with the subject."—*The Gas Journal.*

"There was a need for this book. . . . In his treatment of the subject of modern methods of carbonisation, Professor Lewes is as successful as when dealing with the abstract question of the composition of coal."—*The Colliery Guardian.*

THE DISTRIBUTION OF GAS. By WALTER HOLE. Fourth edition, re-written and enlarged. Crown 4to. 715 pages. 750 illustrations. 1921. 55s. net.

"The work is an absolute masterpiece, and can be recommended with the fullest confidence to all engaged in the gas industry . . . the author is worthy of the utmost praise."—*The Plumber.*

"Indispensable to all associated with gas undertakings."—*The Chemical Age.*

"This book may well be described as the *magnum opus* on the distribution of gas for the gas manager who wants the best up-to-date handbook on the subject, or the student who requires the best textbook; for it covers every aspect of the subject."—*Municipal Engineering.*

"Probably the only absolutely comprehensive work on the subject."—*Journal of the Institution of Mechanical Engineers.*

"The author places the gas industry under an obligation."—*The Gas Journal.*

ERNEST BENN, LTD., 8 Bouverie Street, E.C.4.